Product data sheet
Characteristics

XCSTE7313

plastic guard switch XCSTE - 1NC+1NC - slow break - 1 entry tapped 1/2" NPT

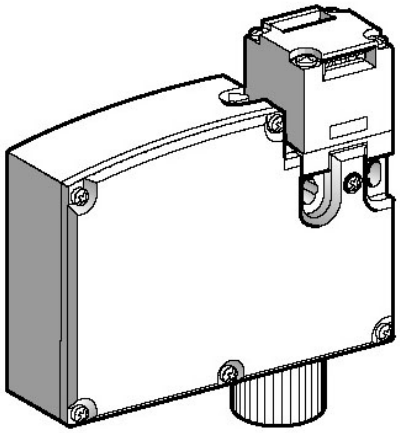

Main

Range of product	Preventa Safety detection
Product or component type	Guard switch
Component name	XCSTE
Material	Plastic
Head type	Turret head
Cable entry	1 entry tapped 1/2" NPT
Electrical connection	Terminal
Number of poles	2
Contacts type and composition	1 NC + 1 NC on output
Contacts operation	Slow-break
Locking options description	With interlocking, locking by solenoid
Electromagnet interlocking	Locking on de-energisation and unlocking on energisation of solenoid
[Us] rated supply voltage	24 V (- 20...10 %)

Complementary

Insulation	Double insulated
Clamping connection capacity	1 x 0.5...2 x 1.5 mm² with or without cable end
Positive opening	With NC contact
Supply voltage type	AC/DC
Supply frequency	50/60 Hz
Load factor	1
Power consumption in VA	10 VA
Service life in hours	For solenoid
Mechanical durability	1000000 cycles
Positive opening minimum force	15 N
Minimum actuation speed	0.01 m/s
Maximum actuation speed	0.5 m/s
Contact code designation	B300 , AC-15 (Ue = 240 V , Ie = 1.5 A) conforming to EN/IEC 60947-5-1 B300 , AC-15 (Ue = 120 V , Ie = 3 A) conforming to EN/IEC 60947-5-1 Q300 , DC-13 (Ue = 250 V , Ie = 0.27 A) conforming to EN/IEC 60947-5-1 Q300 , DC-13 (Ue = 125 V , Ie = 0.55 A) conforming to EN/IEC 60947-5-1
[Ithe] conventional enclosed thermal current	6 A
[Ui] rated insulation voltage	300 V conforming to UL 508 300 V conforming to CSA C22-2 No 14 500 V conforming to EN/IEC 60947-1
[Uimp] rated impulse withstand voltage	6 kV conforming to EN/IEC 60947-5-1
Resistance across terminals	≤ 30 mOhm conforming to EN/IEC 60947-5-4
Short circuit protection	10 A cartridge fuse type gG (gl)
Actutr forcible withdrawal rtc	500 N
Operating rate	10 cyc/mn for maximum durability
Safety level	Can reach PL = e with the appropriate monitoring system and correctly wired conforming to EN/ISO 13849-1 Can reach SIL 3 with the appropriate monitoring system and correctly wired conforming to IEC 61508 Can reach category 4 with the appropriate monitoring system and correctly wired conforming to EN/ISO 13849-1

The information provided in this documentation contains general descriptions and/or technical characteristics of the performance of the products contained herein.
This documentation is not intended as a substitute for and is not to be used for determining suitability or reliability of these products for specific user applications.
It is the duty of any such user or integrator to perform the appropriate and complete risk analysis, evaluation and testing of the products with respect to the relevant specific application or use thereof.
Neither Schneider Electric Industries SAS nor any of its affiliates or subsidiaries shall be responsible or liable for misuse of the information contained herein.

Safety reliability data	B10d = 5000000 (value given for a life time of 10 years limited by mechanical or contact wear)
Body material	PA (polyamide)
Head material	PA (polyamide)
Product weight	0.36 kg

Environment

Standards	CSA C22-2 No 14 EN/IEC 60204-1 EN/IEC 60947-5-1 EN/ISO 12100 EN 1088/ISO 14119 UL 508
Product certifications	CSA UL
Protective treatment	TC
Ambient air temperature for operation	-25...60 °C
Ambient air temperature for storage	-40...70 °C
Vibration resistance	5 gn (f = 10...500 Hz) conforming to IEC 60068-2-6
Shock resistance	10 gn for 11 ms conforming to IEC 60068-2-27
Class of protection against electric shock	Class II conforming to EN/IEC 60536
IP degree of protection	IP67 conforming to EN/IEC 60529 and EN/IEC 60947-5-1
RoHS EUR conformity date	4Q2009
RoHS EUR status	Will be compliant