EY3001

Vibration damper for safety light grids

ANTIVIBRAT.MOUNT.CLAMP SET4

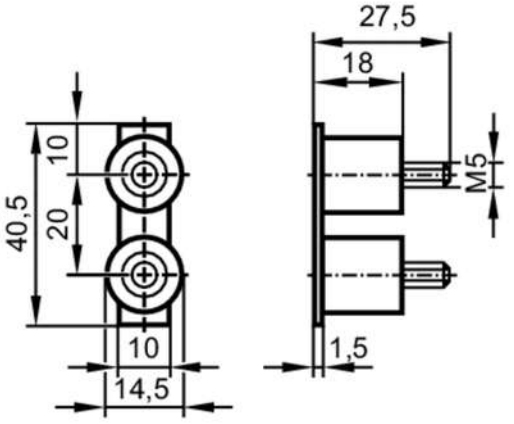

Mechanical data		
Weight	[g]	94.5
Dimensions	[mm]	40 x 27.5 x 10
Materials		rubber; metal galvanised
Remarks		
Pack quantity		4 pcs.