UNISTRUT®

A PART OF atkore INTERNATIONAL

Product Data Sheet

QCN series Channel Nut Fitting

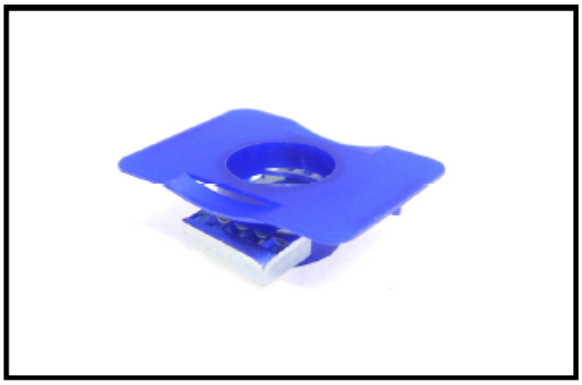

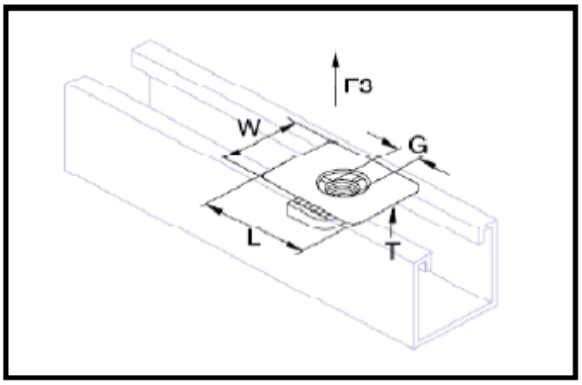

Material: Channel nut (verz.) from S460MC, with zinc plated; or
Channel nut (DT) from S460MC, with Delta Tone; or
Channel nut (A4) from 1.4404 (Sainless Steel 316)
Plastic component from Polyamid (PA6)

Articlel-Number	Type	Dimension [mm]				Weight [g]	max. Permit Load [N]	PU
		G	L	W	T			
139 06 31	verz.	M6	46	35	0,8	30	F3 = 5kN	50
139 08 31	verz.	M8	46	35	0,8	29	F3 = 5kN	50
139 10 31	verz.	M10	46	35	0,8	28	F3 = 5kN	50
139 12 31	verz.	M12	46	35	0,8	26	F3 = 5kN	50
139 06 33	DT	M6	46	35	0,8	30	F3 = 5kN	50
139 08 33	DT	M8	46	35	0,8	29	F3 = 5kN	50
139 10 33	DT	M10	46	35	0,8	28	F3 = 5kN	50
139 12 33	DT	M12	46	35	0,8	26	F3 = 5kN	50
139 06 ??	A4	M6	46	35	0,85	?	F3 = 4kN	50
139 08 ??	A4	M8	46	35	0,8	?	F3 = 4kN	50
139 10 ??	A4	M10	46	35	0,8	?	F3 = 4kN	50
139 12 ??	A4	M12	46	35	0,8	?	F3 = 4kN	50

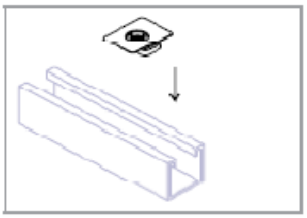

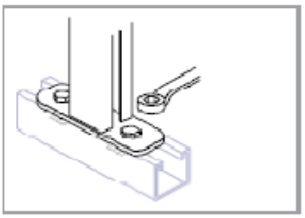

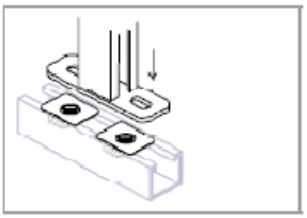

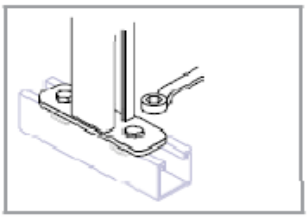

Notice: Usable for all 41mm Unistrut channels!