RAFIX 16, universal switching element, silver, without lamp socket, quick-connect terminal, momentary contact function, 2 NO



fields of application

- Measurement-control-regulation
- Electrical engineering
- Mechanical and system engineering
- Industrial robots

special features

- Suitable for emergency stop and actuators with 2 switching directions, such as selector switches and key switches
- Safe switching due to oxidation-free gold contacts (max. 35 V / 0.25 A)
- NC contacts forcibly separated according to IEC 60947-5-1
- Two separate switching chambers, so two different potentials can be switched
- Contact function momentary (switching functions are realized via the actuating element)
- Mounting by snapping onto actuator
- Disassembly by turning and pulling off
- Flat plug-in connections 2.8 x 0.8 mm (also with PCB plug-in base) or screw connection

description

RAFIX universal switching elements are designed for emergency stops and actuators with two actuating directions (e.g. selector switches). The universal switching elements always have a momentary contact function - then a switching function is implemented by the actuator alone.

technical data

general

Color	light gray
Operating temperature, min.	-25 °C
Operating temperature, max.	70 °C
Storage temperature, min.	-40 °C
Storage temperature, max.	85 °C
illuminated	No
Packaging unit	20 pcs.
net weight	8.4 g
Operating life	1,000,000 cycles
B10	1,300,000 cycles
Environment resistance	IEC 60068-2-14 IEC 60068-2-30

direct links

- RAFI eCatalog

The information in this data sheet only contains general descriptions and / or performance features, which may not apply precisely as described to the respective application, and which my change due to further product enhancements. The technical data, illustrations and other information about our products are the mere results of individual technical testing. These descriptions and other product features are only binding if they expressly agreed upon at the time of the conclusion of a binding contract. In all other cases, we reserve the right to make technical changes as well as changes of availability. Pictures and other graphic illustrations are approximations only. All product names may be trademarks or brand names of the RAFI Group or any other sub-supplier of RAFI. The use of such by any third parties for their own purposes may infringe the rights of the respective entity holding those rights.

RAFI GmbH & Co. KG

Ravensburger Str. 128-134
88276 Berg / Ravensburg
Germany
www.rafi-group.com,
info.headquarters@rafi-group.com

	IEC 60068-2-33 IEC 60068-2-78
Shock resistance according to standard IEC 60068-2-27	50 g at 11 ms amplitude semi-sinusoidal
Vibration resistance according to standard IEC 60068-2-6	10 g at 20 - 500 Hz
Protection class	II
MOQ order	20 pcs.
RoHS compliant	Yes
REACH compliant	Yes

mounting diameters

Outside dimension, length	22.2 mm
Outside dimension, width	22.2 mm
Outside dimension, height	34.4 mm
Mounting depth	44.7 mm

mechanical data

Actuation function	momentary contact function
Operating force, max.	100 N
Operating travel, max.	3 mm
Contact function	2 NO
Contact system	Bridge contact
Contact material	Silver
Fixing	Latching
Solderability	No
Terminal on the rear	Flat quick-connect terminal 2.8 x 0.8

electrical data

Rated insulation voltage	250 V
Rated surge voltage	2,500 V
Rated operating voltage	250 V (AC-15) 250 V / 125 V / 60 V / 24 V (DC-13)
Rated voltage, min.	10 V
Rated voltage, max.	250 V
Voltage type	AC / DC
Rated operating current I, AC15 B300	240 V / 1,5 A
Rated operating current I, DC13 Q300	250 V / 0,275 A 125 V / 0,4 A 60 V / 1 A 24 V / 2 A
Rated operating voltage	10-250 V
Power loss	1.44000 W
Category of use AC-15 / B300	250 V / 1,5 A (CCC)
Categories of use	AC-15 / B300 DC-13 / Q300
Category of use DC-13 / Q300	240 V / 0,27 A (CCC)

The information in this data sheet only contains general descriptions and / or performance features, which may not apply precisely as described to the respective application, and which my change due to further product enhancements. The technical data, illustrations and other information about our products are the mere results of individual technical testing. These descriptions and other product features are only binding if they expressly agreed upon at the time of the conclusion of a binding contract. In all other cases, we reserve the right to make technical changes as well as changes of availability. Pictures and other graphic illustrations are approximations only. All product names may be trademarks or brand names of the RAFI Group or any other sub-supplier of RAFI. The use of such by any third parties for their own purposes may infringe the rights of the respective entity holding those rights.

RAFI GmbH & Co. KG

Ravensburger Str. 128-134
88276 Berg / Ravensburg
Germany
www.rafi-group.com,
info.headquarters@rafi-group.com

drawings

System drawing

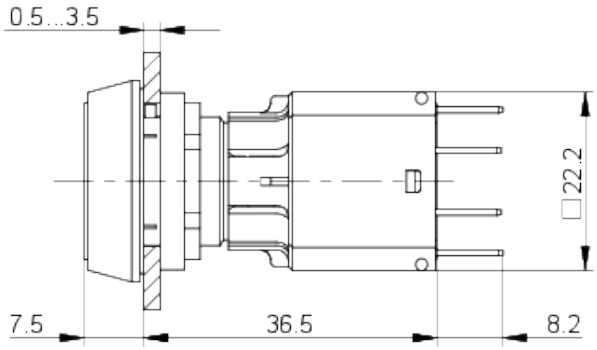

The information in this data sheet only contains general descriptions and / or performance features, which may not apply precisely as described to the respective application, and which my change due to further product enhancements. The technical data, illustrations and other information about our products are the mere results of individual technical testing. These descriptions and other product features are only binding if they expressly agreed upon at the time of the conclusion of a binding contract. In all other cases, we reserve the right to make technical changes as well as changes of availability. Pictures and other graphic illustrations are approximations only. All product names may be trademarks or brand names of the RAFI Group or any other sub-supplier of RAFI. The use of such by any third parties for their own purposes may infringe the rights of the respective entity holding those rights.

RAFI GmbH & Co. KG

Ravensburger Str. 128-134
88276 Berg / Ravensburg
Germany
www.rafi-group.com,
info.headquarters@rafi-group.com