| Size | **Reflector ∅ 84 mm** | **Reflector ∅ 63** | **Reflector ∅ 51 mm** |
|---|---|---|---|
| Attachment | M5 screw | two M4 screws | Rivet with mounting tabs |
| | 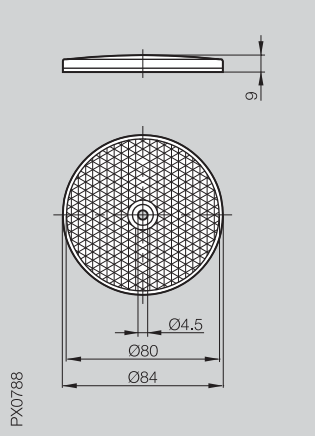 | 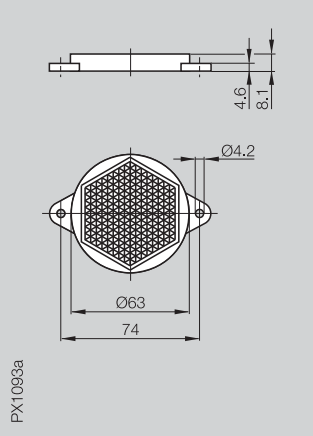 | 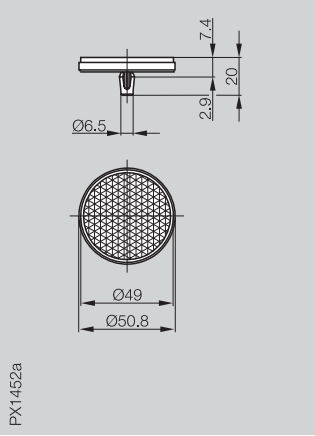 |
| Ordering code | BOS R-1 | BOS R-10 | BOS R-14 |
| Material | PMMA | PMMA | PC |
| Mounting accessories | BOS 21-AD-1 | | |
| Special features | Standard reflector | | Chemical resistant<br>0...+100 °C |
| Temperature range | 0...+65 °C | 0...+65 °C | 60 % |
| Reference sensing range | 100 % | 60 % | |

| Size | **Reflector ∅ 46 mm** | **Reflector ∅ 20 mm** | **Reflector ∅ 20 mm** |
|---|---|---|---|
| Attachment | glue | glue | glue |
| | 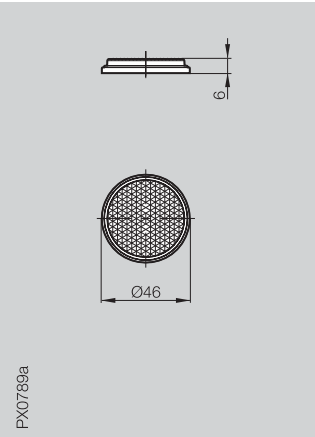 | 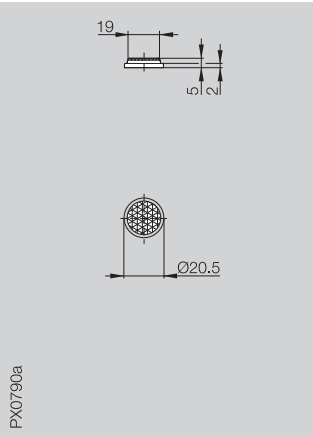 | 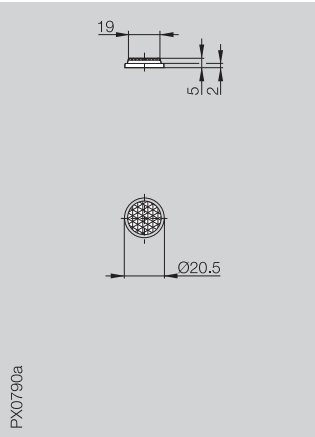 |
| Ordering code | BOS R-2 | BOS R-3 | BOS R-15 |
| Material | PMMA | PMMA | ABS/PMMA |
| Special features | | | Chemical resistant<br>0...+110 °C |
| Temperature range | 0...+65 °C | 0...+65 °C | 25 % |
| Reference sensing range | 60 % | 25 % | |



| Size | Reflector 84×84 mm | Reflector 51×62 mm | Reflector 18×120 mm | Reflector 51×72 mm |
|---|---|---|---|---|
| Attachment | two M3 screws | two M4 screws | two M4 screws | two M4 screws |
| | 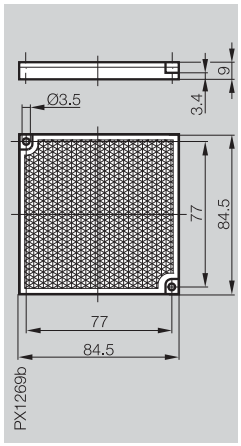 | 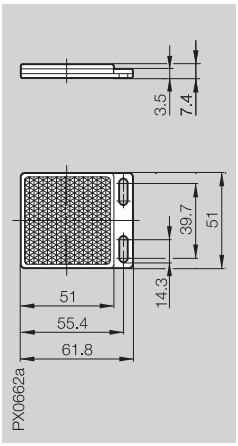 | 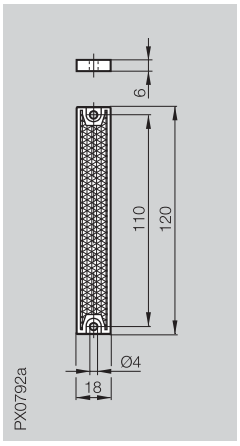 | 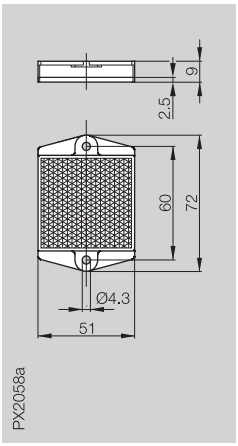 |
| Ordering code | BOS R-11 | BOS R-9 | BOS R-5 | BOS R-25 |
| Material | PMMA | PMMA | PMMA | PMMA |
| Mounting accessories | | BOS 5-HW-6 | | BOS 5-HW-4 |
| Special features | High-performance reflector | | | |
| Temperature range | 0...+50 °C | 0...+50 °C | 0...+50 °C | 0...+50 °C |
| Reference sensing range | 125 % | 100 % | 40 % | 2.5 m (only for BOS 5K) |

| Size | Reflector 35×42 mm | Reflector 33×12 mm | Reflector 33×12 mm | Reflector 33×12 mm |
|---|---|---|---|---|
| Attachment | two M3 screws | one M3 screw | glue | |
| | 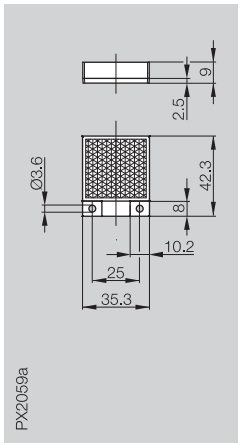 | 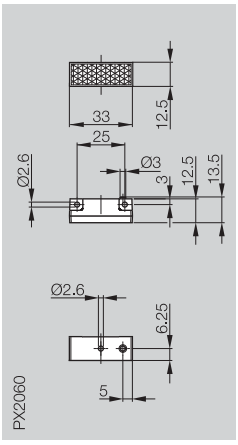 | 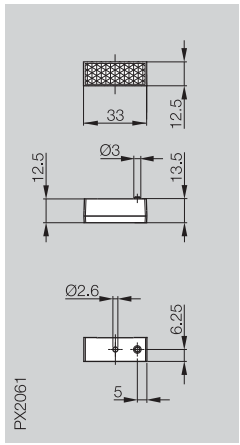 | 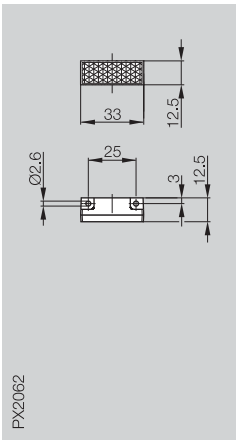 |
| Ordering code | BOS R-26 | BOS R-27 | BOS R-28 | BOS R-29 |
| Material | PMMA | PMMA | PMMA | PMMA |
| Mounting accessories | BOS 5-HW-5 | BOS 5-HW-1/2 | | BOS 5-HW-1/2 |
| Temperature range | 0...+50 °C | 0...+50 °C | 0...+50 °C | 0...+50 °C |
| Reference sensing range | 1.5 m | | | |

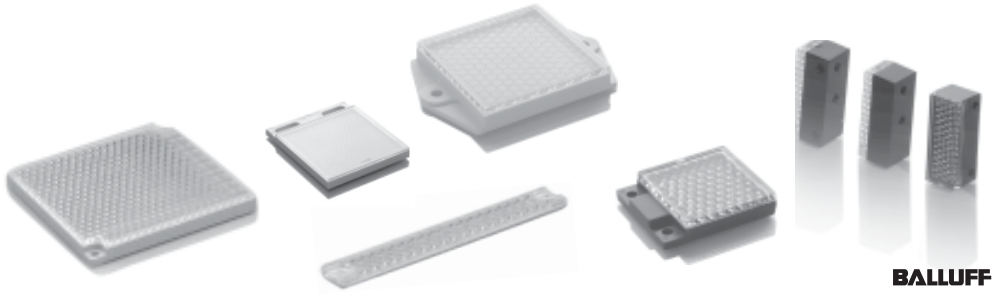

| Size | **Reflector ∅ 25 mm** | **Reflector 14×23 mm** | **Reflector ∅ 20 mm** | **Reflector 51×62 mm** |
|---|---|---|---|---|
| Attachment | glue | two M2 screws | glue | two M4 screws |
| | | | | |
| | | | | |
| | 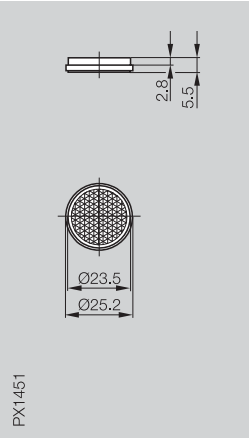 | 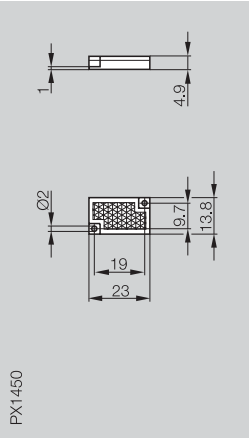 | 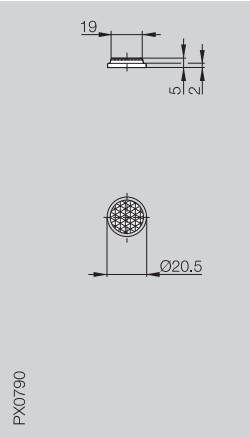 | 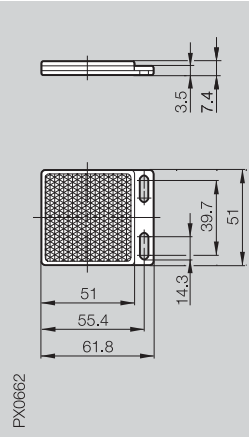 |
| Ordering code | BOS R-13 | BOS R-12 | BOS R-16 | BOS R-22 |
| Material | PMMA | ABS/PMMA | ABS/PMMA | ABS/PMMA |
| Mounting accessories | | | | BOS 5-HW-6 |
| Special features | | Miniature reflector for laser retroreflectives 0...+55 °C | Miniature reflector for laser retroreflectives –20...+60 °C | |
| Temperature range | 0...+55 °C | | | –10...+60 °C |
| **For use with laser retroreflective types BOS 6K-PU-1LQA-.../BOS 26K-PA-1LQB-...** | | | | |
| Reference sensing range | 200 % | 100 % | 150 % | |
| Range with | | | | |
| BOS 6K-PU-1LQA-... | 2 m | 1 m | 1.5 m | |
| BOS 26K-PA-1LQB-... | 5 m | 2.5 m | 3.75 m | |
| **For use with Laser retroreflective types BOS 18K_-PA-1LQ_-.../BOS 26K-PA-1LQK-...** | | | | |
| Reference sensing range | 70 % | 30 % | 40 % | |
| Range with | | | | |
| BOS 18KF-PA-1LQP-... | 11.2 m | 4.8 m | 6.4 m | |
| BOS 18KW-PA-1LQH-... | 6.3 m | 2.7 m | 3.6 m | |
| BOS 26K-PA-1LQK-... | 8.4 m | 3.6 m | 4.8 m | |
| **For use with standard retroreflective types (not laser)** | | | | |
| Reference sensing range | 40 % | 30 % | | |

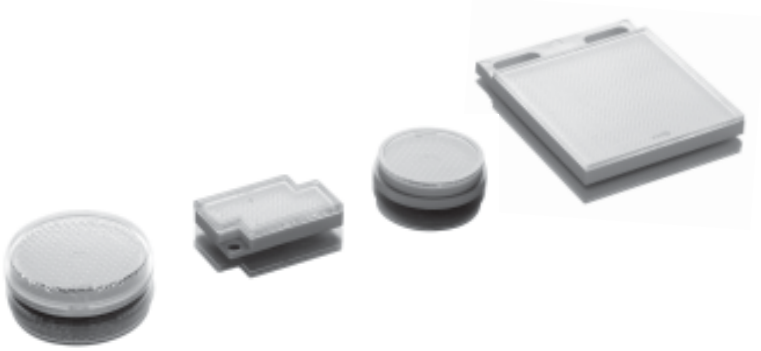

| | | |
|---|---|---|
| Size | **Reflective tape see below** | **Reflective tape 40×35 mm** |
| Attachment | self-adhesive | self-adhesive |

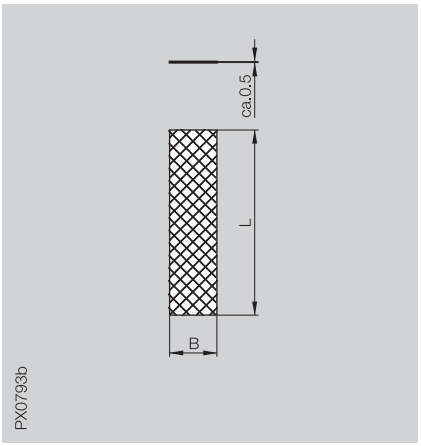


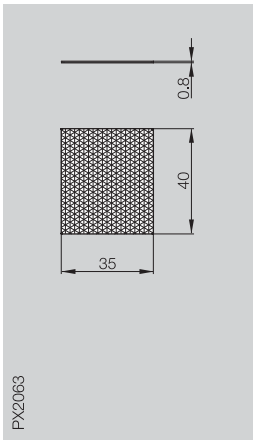


| | | |
|---|---|---|
| Ordering code | BOS R-6-... (not for polarisiertes light)<br>BOS R-7-... (also for polarized light)<br>BOS R-8-... (also for polarized light) | BOS R-30 (also for polarized light) |
| Reference sensing range | 40 % (for 100×50 mm) | 40 % |

| Dimensions LxW | Ordering code |
|---|---|
| 45 m×50 mm | BOS R-6-45 |
| 250 mm×50 mm | BOS R-6-0.25 |
| 22 m×50 mm | BOS R-7-22 |
| 250 mm×50 mm | BOS R-7-0,25 |
| 22 m×25 mm | BOS R-8-22 |
| 250 mm×25 mm | BOS R-8-0.25 |

