TTMS-203A-CF-LIUPN-H1140-L150
Temperature Detection – With Current Output and PNP/NPN Transistor Switching Output

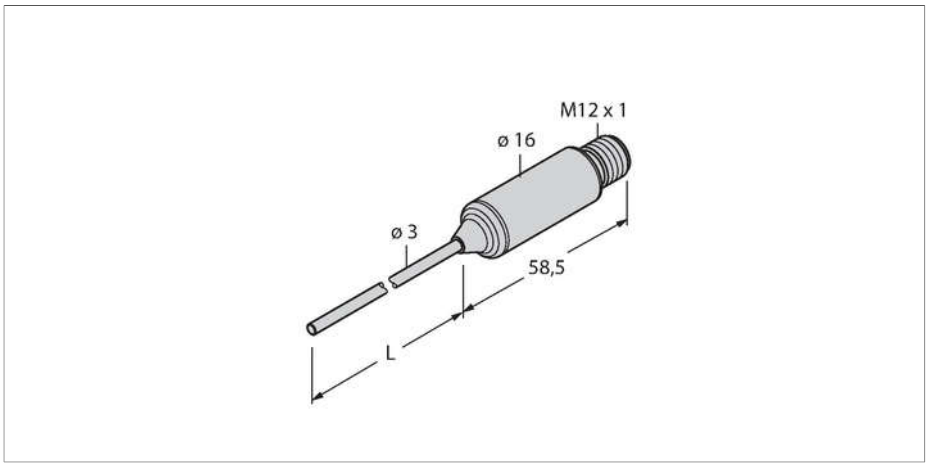

Technical data

Type	TTMS-203A-CF-LIUPN-H1140-L150
ID no.	9910658
Temperature range	
Measuring range	-210…650 °C
Temperature operating range	-346…1202 °F
Accuracy	± 0.15 °C + 0.002 •|t| (-30…350 °C)
Measuring element	Pt-100 probe, DIN EN 60751, class A
Response time	t 0.5 = 1.5 s / t 0.9 = 6.0 s in water at 0.2 m/s
Immersion depth (L)	150 mm
Pressure resistance	100 bar
Power supply	
Operating voltage	15…30 VDC
Current consumption	≤ 20 mA
Short-circuit/reverse polarity protection	yes / yes
Insulation class	III
Output 1	Switching output or IO-Link mode
Output 2	analog output
Switching output	
Communication protocol	IO-Link
Output function	NO/NC programmable, PNP/NPN
Switching point accuracy	± 0.3 K
Rated operational current	0.15 A
Release position	-210…+640 °C
Switching point	-200…+650 °C
Switching cycles	≥ 100 mil.

Features

- Miniature design
- Parameterizable via IO-Link
- Analog output 4…20 mA (2-wire)
- Switching output
- Compression fitting process connection
- Bendable probe (min. bending radius: 3x outer diameter; excluding 30-mm probe tip)

Wiring diagram

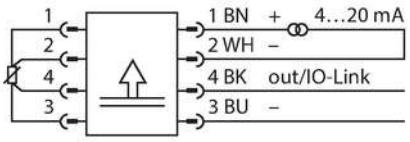

Functional principle

All devices of the miniature transmitter series TTMS are made of stainless steel 1.4404 (AISI 316L). They are available with integrated probe or with M12 probe connection.
Due to the integrated electronics, the limited temperature range must be observed, especially in the area of the M12 connector. Furthermore, the devices feature a current output (2-wire, 4…20 mA), a switching output and communication via IO-Link.

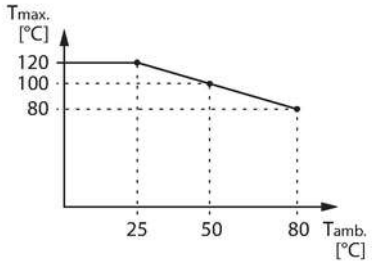

TTMS-203A-CF-LIUPN-H1140-L150| 15-04-2021 21-10 | Technical modifications reserved

Technical data

Analog output	
Current output	4…20 mA
Load	≤ [(Vsupply - 10 V)/21 mA] kΩ
Accuracy (Lin. + Hys. + Rep.)	± 0.3 K
Remark	0.1 % of full scale applies to temperatures > +300 °C
Repeatability	0.1 K
IO-Link	
IO-Link specification	Specified acc. to version 1.1
Transmission physics	corresponds to 3-wire physics (PHY2)
Frame type	2.2
Transmission rate	COM 2 / 38.4 kbps
Process data width	16 bit
Measured value information	15 bit
Switchpoint information	1 bit
Programming	FDT / DTM
Genauigkeit	± 0.2 K
Included in the SIDI GSDML	Yes
Housing material	Stainless steel, 1.4404 (AISI 316L)
Process connection	For compression fittings, thermowell or direct mounting
Electrical connection	Connectors, M12 × 1
Protection class	IP67
Ambient temperature	-40…+80 °C
Storage temperature	-40…+80 °C
Reference conditions acc. to IEC 61298-1	
Temperature	15…+25 °C
Atmospheric pressure	860…1060 hPa abs.
Humidity	45…75 % rel.
Auxiliary power	24 VDC
Temperature behaviour	
Temperature coefficient span T_{kS}	± 0.1 % of full scale/10 K
Temperature coefficient zero point Tk0	± 0.1 % of full scale/10 K
MTTF	541 years acc. to SN 29500 (Ed. 99) 40 °C

Technical data

Type	TTMS-203A-CF-LIUPN-H1140-L150
ID no.	9910658
Temperature range	
Measuring range	-210…650 °C
Temperature operating range	-346…1202 °F

TTMS-203A-CF-LIUPN-H1140-L150| 15-04-2021 21-10 | Technical modifications reserved

Technical data

Accuracy	0.15 °C + 0.002 •|t| (-30…350 °C)
Measuring element	Pt-100 probe, DIN EN 60751, class A
Response time	t 0.5 = 1.5 s / t 0.9 = 6.0 s in water at 0.2 m/s
Immersion depth (L)	150 mm
Power supply	
Operating voltage	15…30 VDC
Current consumption	≤ 20 mA
Voltage drop at I_e	≤ 2 V
Short-circuit/reverse polarity protection	yes / yes
Protection type and class	IP67 / III
Outputs	
Output 1	Switching output or IO-Link mode
Output 2	analog output
Switching output	
Communication protocol	IO-Link
Output function	NO/NC programmable, PNP/NPN
Switching point accuracy	± 0.3 K
Rated operational current	0.15 A
Switching cycles	≥ 100 mil.
Release position	-210…+640 °C
Switching point	-200…+650 °C
Analog output	
Current output	4…20 mA
Load	≤ [(Vsupply - 10 V)/21 mA] kΩ
Accuracy (Lin. + Hys. + Rep.)	± 0.3 K
Remark	0.1 % of full scale applies to temperatures > +300 °C
Repeatability	0.1 K
IO-Link	
IO-Link specification	Specified acc. to version 1.1
Programming	FDT / DTM
Transmission physics	corresponds to 3-wire physics (PHY2)
Transmission rate	COM 2 / 38.4 kbps
Process data width	16 bit
Measured value information	15 bit
Switchpoint information	1 bit
Frame type	2.2
Genauigkeit	± 0.2 K
Included in the SIDI GSDML	Yes
Temperature behaviour	
Temperature coefficient zero point Tk0	± 0.1 % of full scale/10 K

TTMS-203A-CF-LIUPN-H1140-L150| 15-04-2021 21-10 | Technical modifications reserved

Technical data

Temperature coefficient span T_{kS}	± 0.1 % of full scale/10 K
Ambient conditions	
Ambient temperature	-40…+80 °C
Storage temperature	-40…+80 °C
Housing	
Housing material	Stainless steel, 1.4404 (AISI 316L)
Sensor material	Stainless steel, 1.4404 (AISI 316L)
Process connection	For compression fittings, thermowell or direct mounting
Pressure resistance	100 bar
Electrical connection	Connectors, M12 × 1
Reference conditions acc. to IEC 61298-1	
Temperature	15…+25 °C
Atmospheric pressure	860…1060 hPa abs.
Humidity	45…75 % rel.
Auxiliary power	24 VDC
MTTF	541 years acc. to SN 29500 (Ed. 99) 40 °C

TTMS-203A-CF-LIUPN-H1140-L150| 15-04-2021 21-10 | Technical modifications reserved

Accessories

Dimension drawing	Type	ID no.	
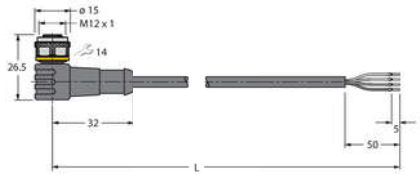	WKC4.4T-2/TEL	6625025	Connection cable, female M12, angled, 4-pin, cable length: 2 m, sheath material: PVC, black; cULus approval; other cable lengths and qualities available, see www.turck.com
	RKC4.4T-2/TEL	6625013	Connection cable, female M12, straight, 4-pin, cable length: 2 m, sheath material: PVC, black; cULus approval; other cable lengths and qualities available, see www.turck.com
	RKC4.4T-2/TXL	6625503	Connection cable, female M12, straight, 4-pin, cable length: 2 m, sheath material: PUR, black; cULus approval; other cable lengths and qualities available, see www.turck.com
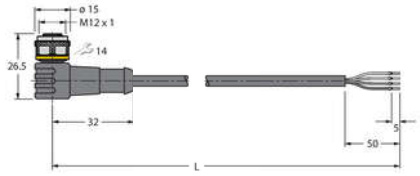	WKC4.4T-2/TXL	6625515	Connection cable, female M12, angled, 4-pin, cable length: 2 m, sheath material: PUR, black; cULus approval; other cable lengths and qualities available, see www.turck.com
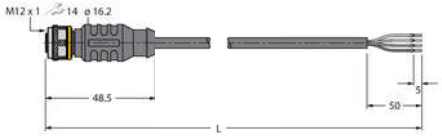	RKC4.4T-P7X2-10/TXL	6626184	Connection cable, female M12, angled, 4-pin, cable length: 10m, sheath material: PUR, black; cULus approval; other cable lengths and qualities available, see www.turck.com

TTMS-203A-CF-LIUPN-H1140-L150| 15-04-2021 21-10 | Technical modifications reserved