BF9400A110

THREE-POLE CONTACTOR, IEC OPERATING CURRENT IE (AC3) = 94A, AC COIL 50/60HZ, 110VAC



Product designation			Power contactor
Product type designation			BF94
Contact characteristics			
Number of poles		Nr.	3
Rated insulation voltage Ui IEC/EN		V	1000
Rated impulse withstand voltage Uimp		kV	8
Operational frequency			
	min	Hz	25
	max	Hz	400
IEC Conventional free air thermal current Ith		A	115
Operational current Ie			
	AC-1 (≤40°C)	A	115
	AC-1 (≤55°C)	A	95
	AC-1 (≤70°C)	A	80
	AC-3 (≤440V ≤55°C)	A	95
	AC-4 (400V)	A	45
Rated operational power AC-3 (T≤55°C)			
	230V	kW	30
	400V	kW	55
	415V	kW	55
	440V	kW	55
	500V	kW	55
	690V	kW	55
	1000V	kW	37
IEC max current Ie in DC1 with L/R ≤ 1ms with 1 poles in series			
	≤24V	A	77
	48V	A	66
	75V	A	66
	110V	A	8
	220V	A	–
IEC max current Ie in DC1 with L/R ≤ 1ms with 2 poles in series			
	≤24V	A	110
	48V	A	110
	75V	A	110
	110V	A	90
	220V	A	9
IEC max current Ie in DC1 with L/R ≤ 1ms with 3 poles in series			
	≤24V	A	110
	48V	A	110
	75V	A	110
	110V	A	93
	220V	A	95
IEC max current Ie in DC1 with L/R ≤ 1ms with 4 poles in series			
	≤24V	A	115
	48V	A	115

The characteristics described in this document are subject to updates or modifications at any time. The descriptions, technical and functional information, illustrations and instructions in this brochure are purely illustrative, and are consequently not contractually binding

	75V	A	115
	110V	A	110
	220V	A	115
IEC max current Ie in DC3-DC5 with L/R ≤ 15ms with 1 poles in series			
	≤24V	A	45
	48V	A	33
	75V	A	33
	110V	A	3
	220V	A	–
IEC max current Ie in DC3-DC5 with L/R ≤ 15ms with 2 poles in series			
	≤24V	A	65
	48V	A	55
	75V	A	55
	110V	A	43
	220V	A	5
IEC max current Ie in DC3-DC5 with L/R ≤ 15ms with 3 poles in series			
	≤24V	A	86
	48V	A	75
	75V	A	75
	110V	A	64
	220V	A	64
IEC max current Ie in DC3-DC5 with L/R ≤ 15ms with 4 poles in series			
	≤24V	A	96
	48V	A	95
	75V	A	95
	110V	A	80
	220V	A	80
Short-time allowable current for 10s (IEC/EN60947-1)		A	640
Protection fuse			
	gG (IEC)	A	125
	aM (IEC)	A	100
Making capacity (RMS value)		A	950
Breaking capacity at voltage			
	440V	A	640
	500V	A	625
	690V	A	456
Resistance per pole (average value)		mΩ	0.6
Power dissipation per pole (average value)			
	Ith	W	7.9
	AC3	W	5.4
Tightening torque for terminals			
	min	Nm	4
	max	Nm	5
	min	lbin	3
	max	lbin	3.7
Tightening torque for coil terminal			
	min	Nm	0.8
	max	Nm	1
	min	lbin	0.59
	max	lbin	0.74
Max number of wires simultaneously connectable		Nr.	2
Conductor section			
Flexible w/o lug conductor section			

The characteristics described in this document are subject to updates or modifications at any time. The descriptions, technical and functional information, illustrations and instructions in this brochure are purely illustrative, and are consequently not contractually binding

		min	mm²	1.5
		max	mm²	35
Power terminal protection according to IEC/EN 60529				IP20
Mechanical features				
Operating position				
		normal		Vertical plan
		allowable		±30°
Fixing				Screw / DIN rail 35mm
Weight			g	1
Operations				
Mechanical life			cycles	15000000
Electrical life			cycles	1100000
Safety related data				
Mirror contats according to IEC/EN 609474-4-1				YES
EMC compatibility				yes
AC coil operating				
Rated AC voltage at 50/60Hz			V	110
AC operating voltage				
	of 50/60Hz coil powered at 50Hz			
		pick-up		
			min %Us	80
			max %Us	110
		drop-out		
			min %Us	20
			max %Us	55
	of 50/60Hz coil powered at 60Hz			
		pick-up		
			min %Us	85
			max %Us	110
		drop-out		
			min %Us	20
			max %Us	55
	of 60Hz coil powered at 60Hz			
		pick-up		
			min %Us	80
			max %Us	110
		drop-out		
			min %Us	20
			max %Us	55
AC average coil consumption at 20°C				
	of 50/60Hz coil powered at 50Hz			
			in-rush VA	210
			holding VA	15
	of 50/60Hz coil powered at 60Hz			
			in-rush VA	195
			holding VA	13
	of 60Hz coil powered at 60Hz			
			in-rush VA	210
			holding VA	15
Dissipation at holding ≤20°C 50Hz			W	5
Max cycles frequency				
Mechanical operation			cycles/h	3600
Operating times				

The characteristics described in this document are subject to updates or modifications at any time. The descriptions, technical and functional information, illustrations and instructions in this brochure are purely illustrative, and are consequently not contractually binding

Average time for Us control					
	in AC				
		Closing NO			
			min	ms	12
			max	ms	28
		Opening NO			
			min	ms	8
			max	ms	22
	in DC				
		Closing NO			
			min	ms	40
			max	ms	85
		Opening NO			
			min	ms	20
			max	ms	55
UL technical data					
Full-load current (FLA) for three-phase AC motor					
			at 480V	A	77
			at 600V	A	77
Yielded mechanical performance					
	for three-phase AC motor				
			200/208V	HP	25
			220/230V	HP	30
			460/480V	HP	60
			575/600V	HP	75
General USE					
	Contactor				
			AC current	A	115
Short-circuit protection fuse, 600V					
	High fault				
			Short circuit current	kA	100
			Fuse rating	A	200
			Fuse class		J
	Standard fault				
			Short circuit current	kA	10
			Fuse rating	A	200
			Fuse class		RK5
Ambient conditions					
Temperature					
	Operating temperature				
			min	°C	-50
			max	°C	70
	Storage temperature				
			min	°C	-60
			max	°C	80
Max altitude				m	3000
Dimensions					

The characteristics described in this document are subject to updates or modifications at any time. The descriptions, technical and functional information, illustrations and instructions in this brochure are purely illustrative, and are consequently not contractually binding

BF9400A110

THREE-POLE CONTACTOR, IEC OPERATING CURRENT IE (AC3) = 94A, AC COIL 50/60HZ, 110VAC

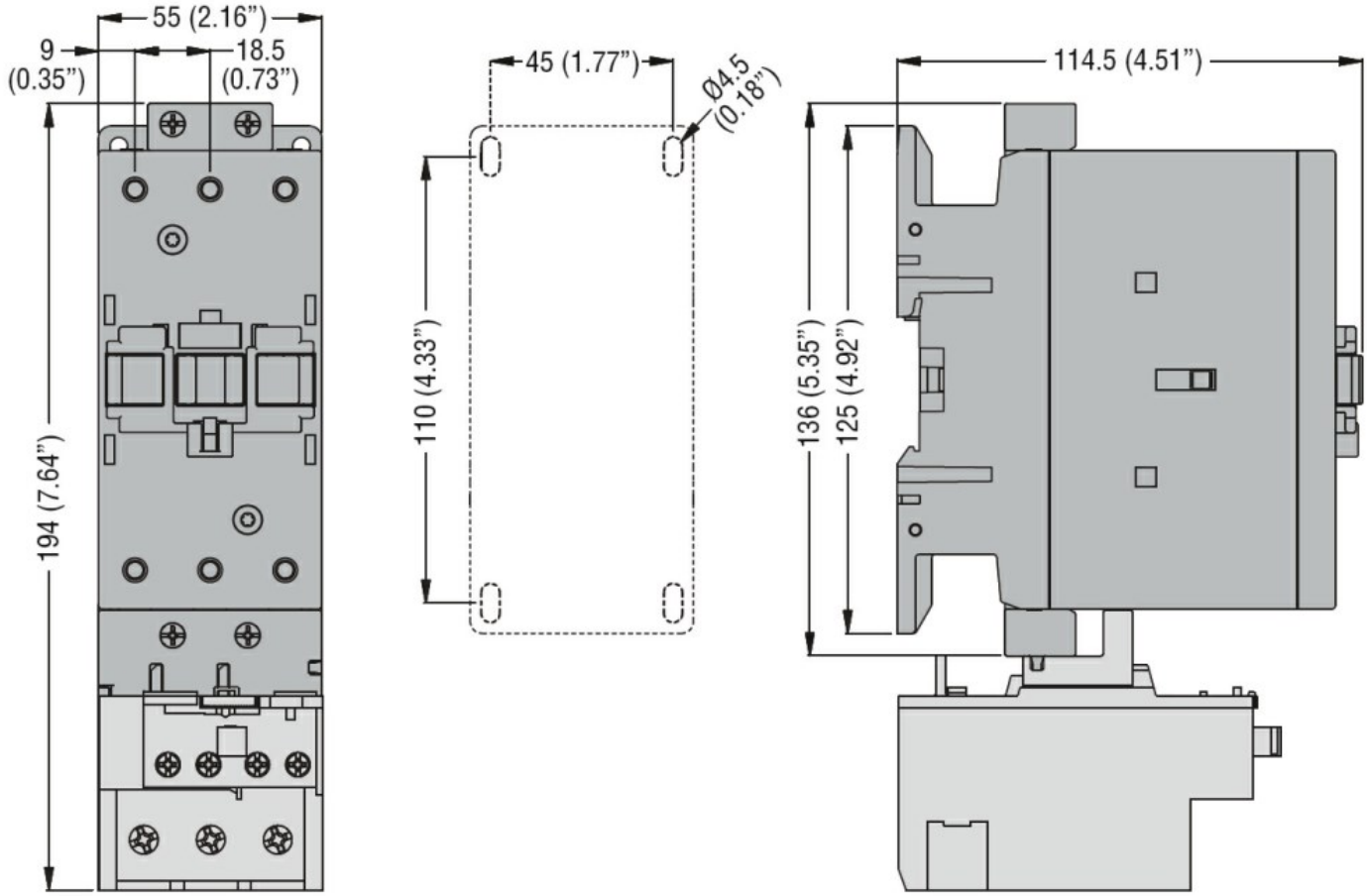

Wiring diagrams

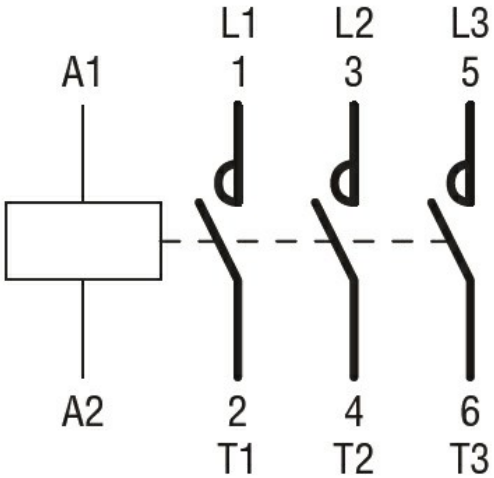

Certifications and compliance

Compliance

CSA C22.2 n° 60947-1
CSA C22.2 n° 60947-4-1
IEC/EN/BS 60947-1
IEC/EN/BS 60947-4-1
UL 60947-1
UL 60947-4-1

Certificates

CCC

The characteristics described in this document are subject to updates or modifications at any time. The descriptions, technical and functional information, illustrations and instructions in this brochure are purely illustrative, and are consequently not contractually binding

	cULus
	EAC

ETIM classification

ETIM 8.0	EC000066 - Power contactor, AC switching

The characteristics described in this document are subject to updates or modifications at any time. The descriptions, technical and functional information, illustrations and instructions in this brochure are purely illustrative, and are consequently not contractually binding