Brand of NTN corporation

Technical data

24028EAW33

Spherical roller bearings



Spherical roller bearing, pressed steel cage, groove and lubrication holes on outer ring

ULTAGE

VISUAL (S)

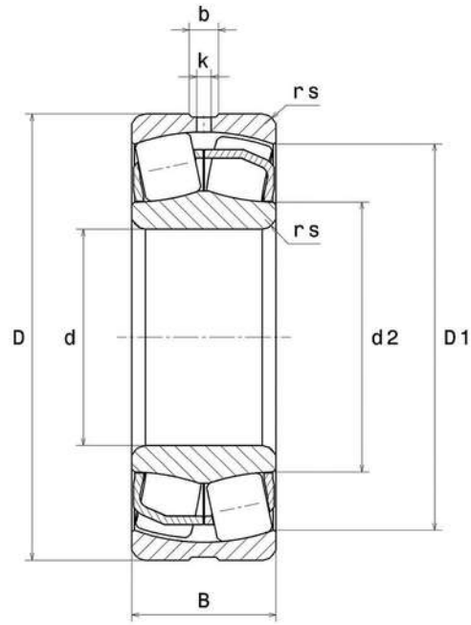

24028EAW33
Spherical roller bearings

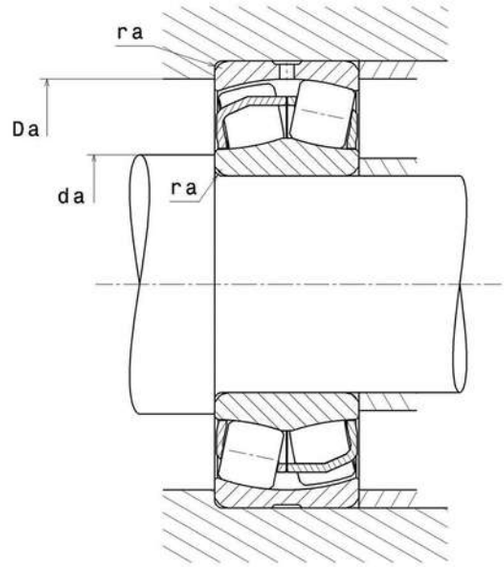

PRODUCT DEFINITION	
Brand	SNR
d - Internal diameter	140 mm
D - External diameter	210 mm
B - Bearing/Inner ring width	69 mm
d2 - External diameter inner ring	152,9 mm
D1 - Inner diameter outer ring	188,2 mm
rs - Min fillet radius	2 mm
Number of lubrication holes	3
b - Groove width	8,9 mm
k - Hole diameter	4 mm
Radial clearance class	CN
Mass	8,03 kg

PRODUCT PERFORMANCE

24028EAW33
Spherical roller bearings

PRODUCT PERFORMANCE	
C - Dynamic load	704000000 mN
C0 - Static load	958000000 mN
Cu - Fatigue limit load	98600000 mN
e - Coefficient	0.28
Y0 - Static axial load coefficient	2.34
Y1 - Lower axial load coefficient	2.39
Y2 - Upper axial load coefficient	3.56
N ref - Reference thermal speed	12600 °/s
N lim - Mechanical Limit Speed	17400 °/s
Tmin - Min operating temperature	233,15 °K
Tmax - Max operating temperature	473,15 °K

BEARING FREQUENCIES	
BPFO - Over rolling frequency on outer ring (60 rpm)	10.667 Hz
BPFI - Over rolling frequency on inner (60 rpm)	13.333 Hz
BSF - Over rolling frequency on rolling element (60 rpm)	8.74 Hz
BRF - Rotational frequency – rolling element (60 rpm)	4.37 Hz
FTF - Rotational frequency - cage (60 rpm)	0.444 Hz

ABUTMENT	
da max - Max shoulder diameter IR	0 mm
da min - Min shoulder diameter IR	148,8 mm
Da max - Max shoulder diameter OR	201,2 mm
ra max - Max shaft & housing fillet radius	2 mm

INDUSTRY CALCUL FACTORS

Equivalent dynamic radial load

$P = X.Fr + Y.Fa$

$Fa / Fr \leq e$		$Fa / Fr > e$	
X	Y	X	Y
1	Y1	0.67	Y2

Equivalent static radial load

$Po = Xo.Fr + Yo.Fa$

X_0	Y_0
1	Y0

The values for e, Y1, Y2 and Y0 are shown in the above table .