StarTech.com

Hard-to-find made easy®

Desk Stand for Dual Monitors



Actual product may vary from photos

User Manual

SKU#: ARMBARDUO

For the latest information and specifications visit
www.startech.com/ARMBARDUO

Manual Revision: 05/28/2020

Compliance Statements

Use of Trademarks, Registered Trademarks, and other Protected Names and Symbols

This manual may make reference to trademarks, registered trademarks, and other protected names and/or symbols of third-party companies not related in any way to StarTech.com. Where they occur these references are for illustrative purposes only and do not represent an endorsement of a product or service by StarTech.com, or an endorsement of the product(s) to which this manual applies by the third-party company in question. Regardless of any direct acknowledgement elsewhere in the body of this document, StarTech.com hereby acknowledges that all trademarks, registered trademarks, service marks, and other protected names and/or symbols contained in this manual and related documents are the property of their respective holders.

Warning Statements

- Make sure that you assemble this product according to the instructions.
- Do not exceed the weight capacity of this product. Overloading this product might result in injury or property damage. This product can support the following weight: 35.2 lb. (16 kg).
- This product is intended for indoor use only and should not be used outdoors.
- The mounting hardware included with this product might not be adequate for some wall structures. If you lack the necessary expertise to attach this product to the wall structure that you're using, contact a construction professional to install the wall mount or to provide specific mounting instructions for your wall structure.

Varningsmeddelanden

- Se till att du monterar produkten i enlighet med instruktionerna.
- Överskrid inte produktens viktkapacitet. Överbelastning av produkten kan orsaka skada på person eller egendom. Denna produkt har stöd för följande vikter: 16 kg.
- Produkten är endast avsedd för användning inomhus och ska inte användas utomhus.
- Monteringsutrustningen som medföljer produkten kanske inte är lämplig för vissa väggstrukturer. Om du saknar nödvändiga kunskaper för att fästa denna produkt på väggstrukturen som du använder, kontakta en professionell konstruktör för att installera väggmonteringen eller för att ge specifika monteringsinstruktioner för din väggstruktur.

Avertissements

- Assemblez ce produit conformément aux instructions.
- Ne dépassez pas la capacité pondérale du produit. Une surcharge du produit peut entraîner des blessures ou des dommages matériels. Ce produit peut supporter 16 kg.
- Ce produit est uniquement destiné à une utilisation en intérieur et ne doit pas être utilisé à l'extérieur.
- Le matériel de fixation inclus avec ce produit n'est pas forcément approprié pour toutes les structures de murs. Si vous ne disposez pas des compétences nécessaires pour installer ce produit au mur, contactez un professionnel afin qu'il installe le support mural ou qu'il vous fournisse les instructions de montage spécifiques à votre structure de mur.

Warnhinweise

- Beachten Sie bei der Montage dieses Produkts die Montageanweisungen.
- Überschreiten Sie nicht die Tragkraft dieses Produkts. Ein Überladen dieses Produkts kann zu Verletzungen oder zur Beschädigung des Produkts führen. Dieses Produkt ist für folgendes Gewicht geeignet: 16 kg.
- Dieses Produkt ist nur zum Gebrauch in Innenräumen vorgesehen und sollte nicht im Freien verwendet werden.
- Das mitgelieferte Montagematerial ist möglicherweise nicht für jede Wand geeignet. Wenn Ihnen die nötigen Fachkenntnisse zum Anbringen dieses Produkts an einer Wand fehlen, lassen Sie einen Fachmann den Wandhalter anbringen, oder lassen Sie sich von einem Fachmann Montageanweisungen für Ihre Wand erteilen.

Dichiarazioni di avvertenza

- Assicurarsi di Assemblare il prodotto secondo le istruzioni.
- Non superare la capacità di carico del prodotto. Il sovraccarico del prodotto potrebbe causare danni o lesioni. Il prodotto è in grado di supportare i seguenti pesi: 16 kg.
- Il prodotto è destinato all'uso in ambienti interni. Se ne sconsiglia l'impiego in ambienti esterni.
- L'hardware di montaggio incluso con il prodotto potrebbe non essere adeguato ad alcune strutture murarie. Se l'utente non dispone delle competenze necessarie per agganciare il prodotto alla struttura muraria in uso, dovrà contattare un professionista edile per installare il supporto a parete o ottenere istruzioni di montaggio per la struttura muraria in uso.

Mensagens de aviso

- Certifique-se de que monta este produto de acordo com as instruções.
- Não exceda a capacidade de peso deste produto. Sobrecarregar este produto pode resultar em ferimentos ou danos de propriedade. Este produto pode suportar o seguinte peso: 16 kg.
- Este produto destina-se apenas a uma utilização no interior e não deve ser utilizado no exterior.
- Este produto requer uma ligação à terra. Não utilize este produto sem uma ligação à terra.

- O hardware de montagem incluído com este produto pode não ser adequado para algumas estruturas de parede. Se não tiver o conhecimento necessário para fixar este produto à estrutura de parede que está a usar, contacte um profissional de construção para fazer a instalação em parede ou para fornecer instruções de montagem específicas para a sua estrutura de parede.

Advertencias de uso

- Asegúrese de ensamblar este producto según las instrucciones.
- Asegúrese de no exceder la capacidad de peso de este producto. La sobrecarga de este producto puede causar lesiones personales o daños en la propiedad. Este producto tiene capicidad para el siguiente peso: 16 kg.
- El uso de este producto es solo para interiores y no debe utilizarse en exteriores.
- El hardware de montaje incluido con este producto puede no ser adecuado para algunas estructuras de pared. Si no tiene la experiencia suficiente para fijar este producto a la estructura de la pared correspondiente, póngase en contacto con un profesional de la construcción para instalar el soporte de pared o para que le proporcione las instrucciones específicas de montaje para su estructura de pared.

Waarschuwingen

- Zorg dat u dit product volgens de instructies in elkaar zet.
- Overschrijd de maximale capaciteit van dit product niet. Overbelasting van dit product kan letsel of materiële schade veroorzaken. Dit product ondersteunt het volgende gewicht: 16 kg.
- Dit product is alleen bedoeld voor binnengebruik en mag niet buiten worden gebruikt.
- De bij dit product geleverde montagemiddelen kunnen niet geschikt zijn voor sommige wandstructuren. Als u onvoldoende kennis hebt om dit product aan de door u gebruikte wandstructuur te bevestigen, neem dan contact op met een bouwkundige om de steun aan de muur te installeren of specifieke montage-instructies voor uw wandstructuur te geven.

注意

- 必ず取扱説明書に従って本製品の組み立てを行って下さい。
- 本製品で定められた最大積載重量を超えないようにして下さい。最大積載重量をオーバーした場合、怪我をする恐れや器物破損の恐れがあります。本製品は、モニター1台あたり16kgまで支持できます。

- 本製品は、室内での使用を想定しています。戸外では使用しないで下さい。
- 本製品に同梱されている取付け金具は、ご使用になる壁の構造に対して十分ではない場合があります。本製品を壁面に取り付ける時、十分な専門知識が不足していると判断された場合、専門業者に連絡を取って、本製品の取り付けを行ってもらうか、お客様の壁の構造に適した取り付け方法を教えてもらってから取り付けを行って下さい。

Safety Statements

Safety Measures

- Cables (including power and charging cables) should be placed and routed to avoid creating electric, tripping or safety hazards.

Mesures de sécurité

- Les câbles (y compris les câbles d'alimentation et de chargement) doivent être placés et acheminés de façon à éviter tout risque électrique, de chute ou de sécurité

安全対策

- ケーブル（電源ケーブルと充電ケーブルを含む）は、適切な配置と引き回しを行い、電気障害やつまづきの危険性など、安全上のリスクを回避するようにしてください。

Misure di sicurezza

- I cavi (inclusi i cavi di alimentazione e di ricarica) devono essere posizionati e stesi in modo da evitare pericoli di inciampo, rischi di scosse elettriche o pericoli per la sicurezza.

Säkerhetsåtgärder

- Kablar (inklusive elkablar och laddningskablar) ska dras och placeras på så sätt att risk för snubblingsolyckor och andra olyckor kan undvikas.

StarTech.com
Hard-to-find made easy®

Table of Contents

Compliance Statements 1

Warning Statements 2

Safety Statements 5

Product Diagram 7

Front View 7

Product Dimensions 8

Product Information 9

Package Contents 9

Assembly 12

Assembling the Base 12

Attaching the Crossbar 13

Adjusting the Monitor Plates 14

Attaching the Monitors - Flush Installation 16

Attaching the Monitors - Recessed Installation 17

Adjusting the Monitors 19

Tilt Adjustment 19

Swivel Adjustment 19

Adjusting the VESA Mount 20

Routing the Cables 21

Product Diagram

Front View

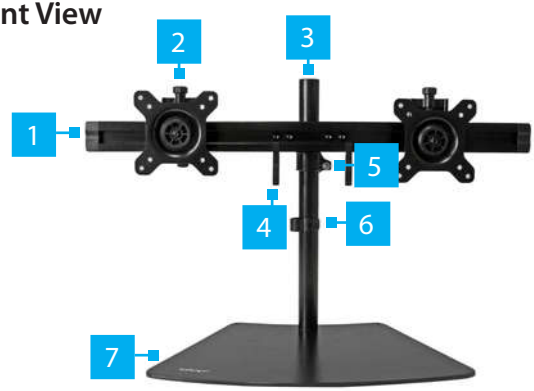

1	*Crossbar*	5	*Height Adjustment Ring*
2	*VESA Monitor Mounts (x 2)*	6	*Cable-Management Clip*
3	*Pole*	7	*Baseplate*
4	*Crossbar Cable-Management Clip*		

Product Dimensions

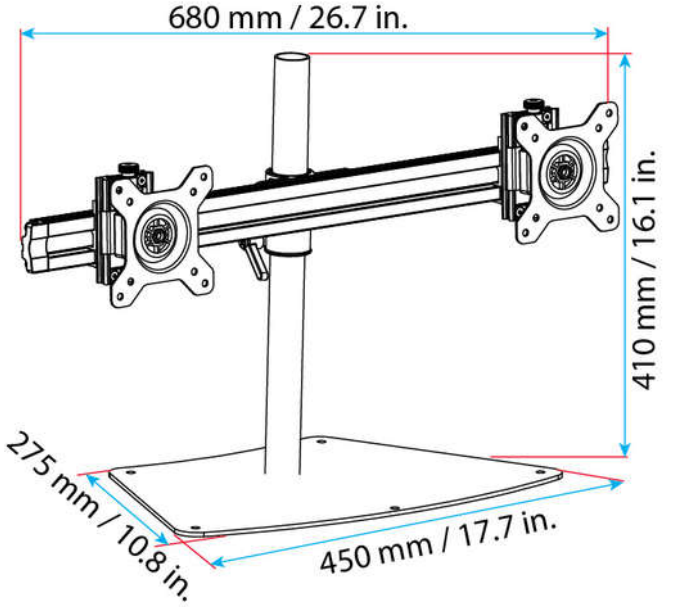

Product Information

Package Contents

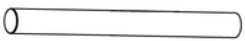	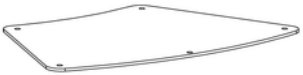
Pole	*Baseplate*
Qty: 1	*Qty: 1*
	
M6x15 mm Screws	*Cable-Management Clip*
Qty: 3	*Qty: 1*

 ***Pole Cap*** ***Qty: 1***	 ***Height Adjustment Ring*** ***Qty: 1***
 ***Crossbar*** ***Qty: 1***	 ***VESA Monitor Mount*** ***Qty: 2***
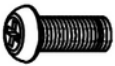 ***M4x12 mm Screw*** ***Qty: 8***	 ***M4x30 mm Screw*** ***Qty: 8***

 ***Plastic Spacers*** ***Qty: 8***	 ***M3 Hex Key*** ***Qty: 1***
 ***M4 Hex Key*** ***Qty: 1***	 ***Cable-Management Clips*** ***Qty: 2***
 ***M5 Hex Key*** ***Qty: 1***	

Assembly

Warning! *Make sure that all of the hardware is assembled securely and checked for stability before you install the monitors.*

Assembling the Base

1. Insert the three **M6x15 mm Screws** through the three holes in the **Baseplate** and into the **Pole**.

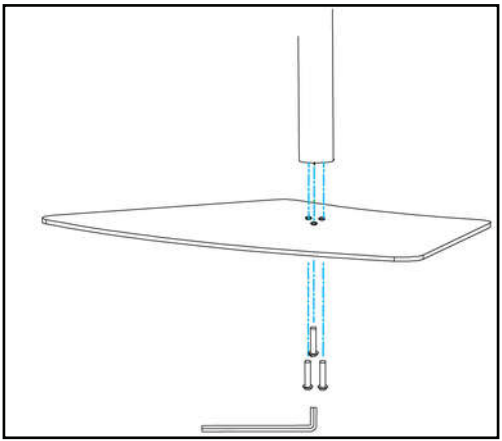

Inserting the M6x15 mm Screws into the Baseplate

2. Using the **M4 Hex Key**, turn the **M6x15 mm Screws** clockwise to tighten them.

Attaching the Crossbar

1. Slide the **Height-Adjustment Ring** down the **Pole** to the height that you want the monitors to be at.
2. Press the lever on the **Height-Adjustment Ring** to tighten it and prevent it from sliding down the pole.
3. Slide the **Crossbar** down the **Pole** so that it sits on the **Height-Adjustment Ring**.
4. Push the **Pole Cap** down onto the top of the **Pole**.

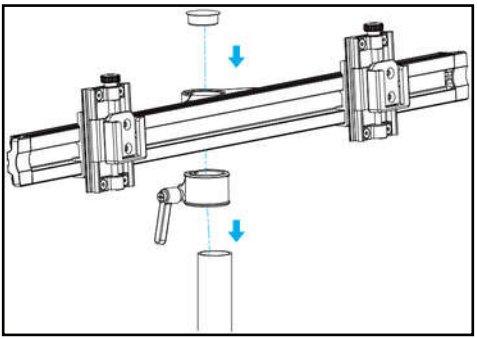

Attaching the Crossbar Assembly

5. Using the **M3 Hex Key**, turn the screw in the crossbar clockwise to tighten it and prevent the crossbar from moving

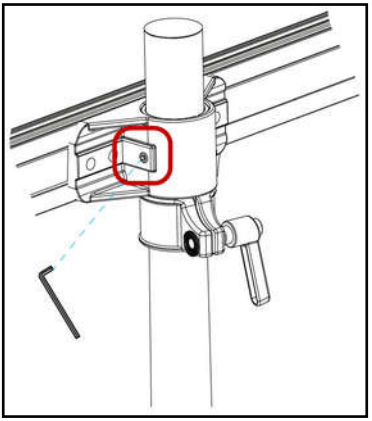

Tightening the Crossbar

Adjusting the Monitor Plates

1. Loosen the **Plates** on the **Crossbar**, by turning the **Thumb Screws** at the bottom of the plates counterclockwise.

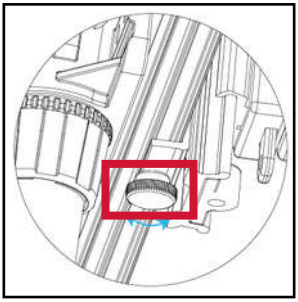

Loosening the Plates

2. Move the **Plates** right and left until the **Plates** are in the desired position.

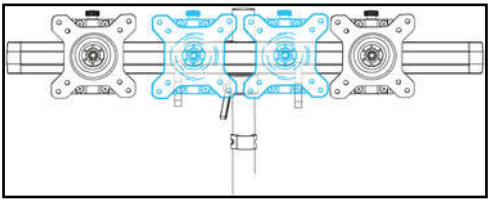

Moving the Plates Left and Right

3. When the **Plates** are in the desired position, turn the **Thumb Screws** at the bottom of the plates clockwise to lock the **Plates** in place.
4. To move the **Plates** up or down, turn the **Thumb Screws** at the top of the **Plates** counterclockwise or clockwise.

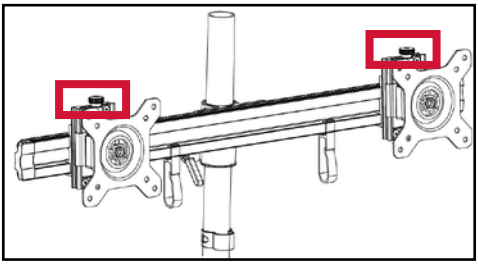

Moving the Plates Up and Down

Attaching the Monitors - Flush Installation

Warnings! *The* **Desk Stand** *is designed to display two monitors between 15 and 24 inches in size. The maximum weight capacity of the* **Desk Stand** *is a total of 35.2 lb. (16 kg), with each monitor mount able to hold 17.6 lb. (8 kg).*

To prevent scratching during the installation process, you should handle the surface of the **Monitors** *with care.*

1. Insert four of the **M4x12 mm Screws** through the **VESA Monitor Mount** and into the **Mounting Holes** on the back of the **Monitor**.
2. Use a **Phillips Screwdriver** to tighten the screws.
3. Repeat steps 1 - 2 to install the second **Monitor**.

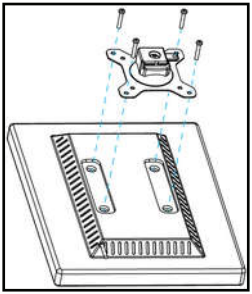

Installing the VESA Monitor Mount - Flush Installation

4. Slide each of the **VESA Monitor Mounts** onto the **Plates** on the **Crossbar**.
5. Turn the screw on the side of each of the **VESA Monitor Mounts** clockwise to tighten the **VESA Monitor Mounts** in place.

Attaching the Monitors - Recessed Installation

1. Insert four of the **M4x30 mm Screws** through the **VESA Monitor Mount,** into four of the **Plastic Spacers**, and into the **Mounting Holes** on the back of the **Monitor**.
2. Use a **Phillips Screwdriver** to tighten the screws.
3. Repeat steps 1 - 2 to install the second **Monitor**.

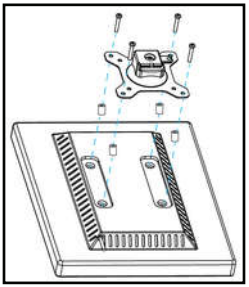

Installing the VESA Monitor Mount - Recessed Installation

4. Slide each of the **VESA Monitor Mounts** onto the **Plates** on the **Crossbar**.
5. Turn the screw on the side of each of the **VESA Monitor Mounts** clockwise to tighten the **VESA Monitor Mounts** in place.

Adjusting the Monitors

Tilt Adjustment

The **Monitors** can be tilted to commodate different viewing angels (15 degrees downward or upward).

- Place both of your hands on either side of the **Monitor** and apply light pressure either downward or upward. The **Monitor** will tilt to a maximum of 15 degrees in either direction.

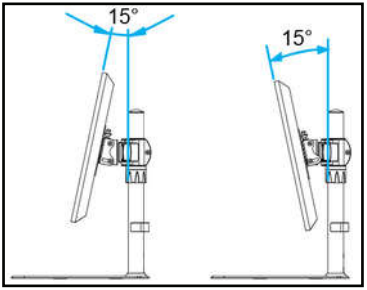

Monitor Adjustment

Swivel Adjustment

The **Monitors** can be adjusted on a 360 degree swivel.

- Place both of your hands on either side of the **Monitor** and apply light pressure either left or right. The **Monitor** will swivel 360 degrees.

Adjusting the VESA Mount

If the **Monitors** are not staying in place, the **Hex Screw** on the back of the **VESA Monitor Mount** will need to be tightened. This **Hex Screw** may also need to be loosened in order to readjust the position of the **Monitors**.

1. Remove the **VESA Monitor Mount** from the **Plate** by turning the **Screw** on the side of each of the **VESA Monitor Mounts** counterclockwise to loosen the **VESA Monitor Mounts**.
2. Lift the **Monitors** straight up and out of the **Plates**.
3. Place the **Monitors** screen side down on a scratch-free surface.
4. Remove the **Monitors** from the **VESA Monitor Mounts** by loosening all four **Screws** on each of the **VESA Monitor Mounts**, using a **Phillips Head Screwdriver**. Remove the **Screws**, the **VESA Monitor Mounts**, the **Washers** and any **Spacers** that may have been used for the installation.
5. Hold the **Plastic Disc** (located on the front of the **VESA Monitor Mount**) in place using **Needle-nose Pliers**. While holding the **Plastic Disc**, tighten the **Hex Screw**, located on the back of the **VESA Monitor Mount**, using the **M5 Hex Key**.

   Notes: *Always tighten these* **Hex Screws** *immediately after adjusting the position of the* **Monitors***.*

   A second person may be required to hold the **Monitor** *after adjusting its position.*

6. Once the **Hex Screw** is tightened, re-attach the **VESA Monitor Mount**.

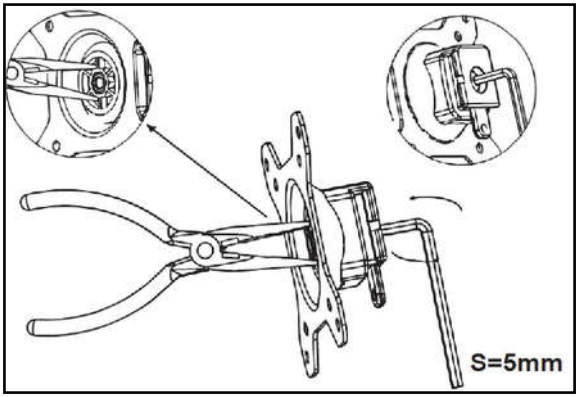

Adjusting the Monitor Tilt

Routing the Cables

The ***Desk Stand*** comes with three **Cable-Management Clips** that you can use to direct the monitor cables along the **Crossbar** and down the **Pole** so that they are out of your way.

Make sure that the cables that you are routing are unplugged before you complete the following steps.

1. Attach the two **Cable-Management Clips** (crossbar) to the **Crossbar**. If necessary, you can move the **Cable-Management Clips** right or left along the **Crossbar**.

2. Run the cable coming from each of the monitors through the corresponding **Cable-Management Clips** (crossbar).
3. Hold the cables against the **Pole** and snap the **Cable-Management Clip** (pole) over the cables and onto the **Pole**. You can place the **Cable-Management Clip** on the front or the back of the **Pole**, depending on your preference.

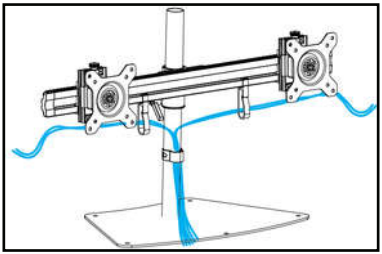

Routing the Cables

Warranty Information

This product is backed by a two-year warranty.

For further information on product warranty terms and conditions, please refer to www.startech.com/warranty.

Limitation of Liability

In no event shall the liability of StarTech.com Ltd. and StarTech.com USA LLP (or their officers, directors, employees or agents) for any damages (whether direct or indirect, special, punitive, incidental, consequential, or otherwise), loss of profits, loss of business, or any pecuniary loss, arising out of or related to the use of the product exceed the actual price paid for the product.

Some states do not allow the exclusion or limitation of incidental or consequential damages. If such laws apply, the limitations or exclusions contained in this statement may not apply to you.

StarTech.com
Hard-to-find made easy®

Hard-to-find made easy. At StarTech.com, that isn't a slogan. It's a promise.

StarTech.com is your one-stop source for every connectivity part you need. From the latest technology to legacy products — and all the parts that bridge the old and new — we can help you find the parts that connect your solutions.

We make it easy to locate the parts, and we quickly deliver them wherever they need to go. Just talk to one of our tech advisors or visit our website. You'll be connected to the products you need in no time.

Visit www.startech.com for complete information on all StarTech.com products and to access exclusive resources and time-saving tools.

StarTech.com is an ISO 9001 Registered manufacturer of connectivity and technology parts. StarTech.com was founded in 1985 and has operations in the United States, Canada, the United Kingdom and Taiwan servicing a worldwide market.

Reviews

Share your experiences using StarTech.com products, including product applications and setup, what you love about the products, and areas for improvement.

StarTech.com Ltd.
45 Artisans Cres.
London, Ontario
N5V 5E9
Canada

StarTech.com LLP
2500 Creekside Pkwy.
Lockbourne, Ohio
43137
U.S.A.

StarTech.com Ltd.
Unit B, Pinnacle
15 Gowerton Rd., Brackmills
Northampton
NN4 7BW
United Kingdom

FR: startech.com/fr
DE: startech.com/de
ES: startech.com/es
NL: startech.com/nl
IT: startech.com/it
JP: startech.com/jp