P5X18472

IP65 RED/ YELLOW PADLOCKABLE DOOR COUPLING HANDLE FOR P5ME…400/630, COMPLETE WITH SHAFT 469MM



Mechanical features

Weight	g	2200

Ambient conditions

IEC degree of protection	IP65

Dimensions

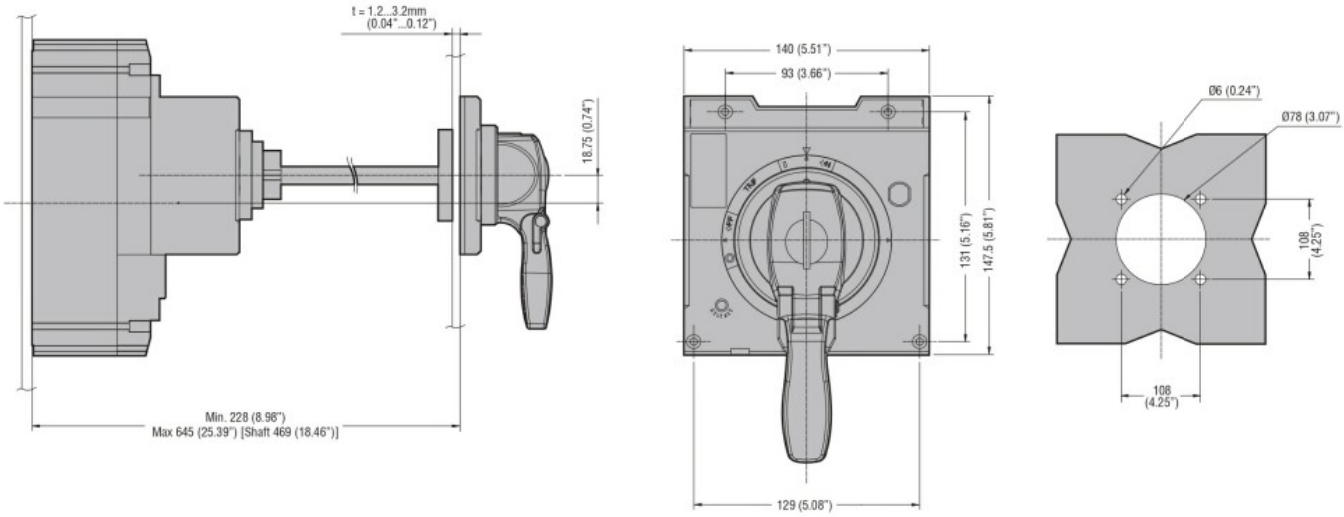

Certifications and compliance

Certificates

ETIM classification

EC000066 - Power contactor, AC switching

The characteristics described in this document are subject to updates or modifications at any time. The descriptions, technical and functional information, illustrations and instructions in this brochure are purely illustrative, and are consequently not contractually binding