Product Data Sheet

Published Date: 16.12.2014

Energy Saving Air Amplifiers



Product Code: A15000

Meech Air Technology Energy Saving Air Amplifiers provide large airflows whilst only consuming a minimal volume of compressed air.

A tiny amount of compressed air is released through an adjustable circular slot inside the Air Amplifier creating a 'tube' of air. The 'tube' of air then travels towards the front creating areas of low pressure behind and in front that entrains ambient air at a ratio of 12, 20 and 25:1 depending on the size of air amplifier.

Meech Air Amplifiers are available in six sizes in stainless steel or aluminium to suit a wide range of applications.

Features	Benefits
Innovative design	Giving air amplification ranging from 12 to 25:1
No moving parts	Low maintenance
Adjustability	Application specific set-up (no shims). Leading to hundreds of different applications
Locking ring	Holds specific set-up
Lower noise levels	Up to 50dBA noise reduction compared to 'open pipe' systems - Health and Safety Compliant
Available in 6 sizes	From 9mm to 100mm air outlet
Available in aluminium or stainless steel	Suitable for a wide range of industries
Lower compressed air usage	Lower running costs and in turn lower energy bills

Technical Characteristics

Dimensions	A15004 - Micro Air Amp – 24mm (L) x 14mm (H) x 6mm throat (9mm outlet) A15005 - Extra Small – 44mm (L) x 28mm (H) x 12mm throat (18mm outlet) A15008 - Small – 73mm (L) x 50mm (H) x 20mm throat (32mm outlet) A15006 - Medium – 90mm (L) x 60mm (H) x 25mm throat (37mm outlet) A15015 - Large – 84mm (L) x 76mm (H) x 40mm throat (51mm outlet) A15030 - Extra Large – 128mm (L) x 127mm (H) x 74mm throat

Product shown in this document may be covered by one or more patents, patents applied for and/or registered designs and/or trade marks. For further information please refer to our Head Office or visit " www.meech.com.

Meech International
UK: +44 1993 706 700
Hungary: +36 27 535 075
US: +1 330 564 2000
China: +86 400 820 0102
Belgium: +32 8067 0204
India: +91 20-26159641
email: sales@meech.com
web: www.meech.com

© Meech Static Eliminators Ltd 2015

Product Data Sheet

Published Date: 16.12.2014

(100mm outlet)

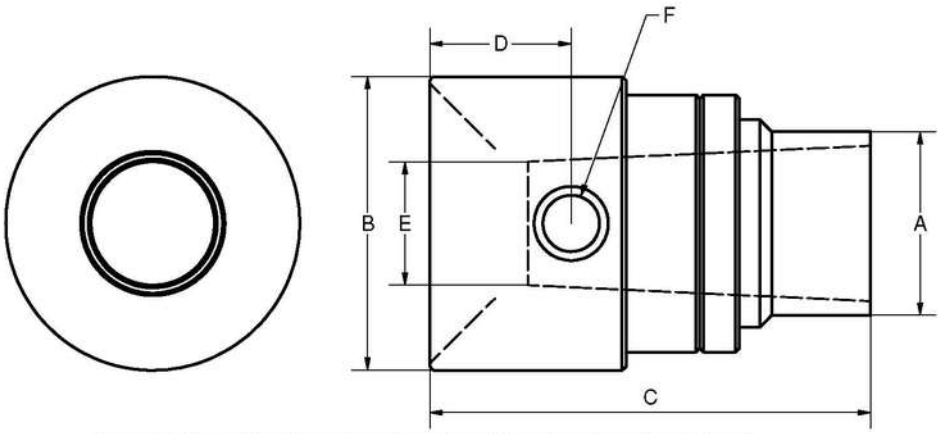

	Micro	XS	S	M	L	EL
A	9	18	32	37	51	100
B	14	28	50	60	76	127
C	24	44	73	90	84	128
D	8	14	25	30	25	38
E	6	12	20	25	40	74
F	M5	M5	1/4 BSP	1/4 BSP	3/8 BSP	1/2 BSP

Product shown in this document may be covered by one or more patents, patents applied for and/or registered designs and/or trade marks. For further information please refer to our Head Office or visit " www.meech.com.

Meech International

UK: +44 1993 706 700
Hungary: +36 27 535 075
US: +1 330 564 2000
China: +86 400 820 0102
Belgium: +32 8067 0204
India: +91 20-26159641
email: sales@meech.com
web: www.meech.com

© Meech Static Eliminators Ltd 2015