5mm DIN rail mounted inverted/ reverse terminal blocks

Product overview

- Horizontal orientations
- Polarized moldings
- Can be reversed on DIN clips
- Also available in 5.08mm pitch
- Molded in green UL94-V0 flame retardant PA 66
- 2.5mm² (28-14AWG)
- , approved
- 6-12 poles standard (13-24 also available)

SPECIFICATION	
Rating	UL=15A/300V IEC 20A/450V
Insulation resistance	500MΩ/500V
Withstand Voltage	AC2000V/1min
Contact Resistance	20mΩ (max)
Working Temperature	-40°C to 105+°C
Mouldings	UL94-V0 Flame retardant PA66
Pin/Terminal	Brass, Tin plated
Rising Clamp	Brass, nickel plated
Screw/Torque	M3 Steel, zinc plated 0.5Nm

DIN rail mounting male horizontal

PART NO.	POLES	LENGTH
CTBPD96HG/6	6	31.4mm
CTBPD96HG/7	7	36.4mm
CTBPD96HG/8	8	41.4mm
CTBPD96HG/9	9	46.4mm
CTBPD96HG/10	10	51.4mm
CTBPD96HG/11	11	56.4mm
CTBPD96HG/12	12	61.4mm

CTBPD96HG



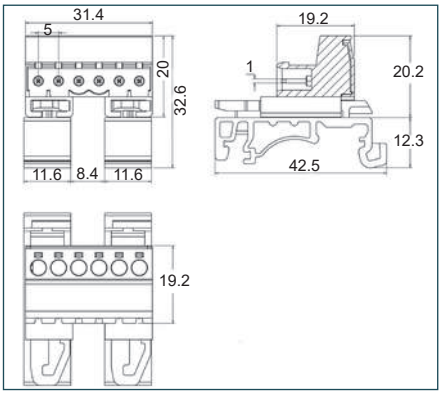

DIN rail mounting male horizontal flanged

PART NO.	POLES	LENGTH A	LENGTH B
CTBPD96HG/6FL	6	31.4mm	40.0mm
CTBPD96HG/7FL	7	36.4mm	45.0mm
CTBPD96HG/8FL	8	41.4mm	50.0mm
CTBPD96HG/9FL	9	46.4mm	55.0mm
CTBPD96HG/10FL	10	51.4mm	60.0mm
CTBPD96HG/11FL	11	56.4mm	65.0mm
CTBPD96HG/12FL	12	61.4mm	70.0mm

CTBPD96HG/FL

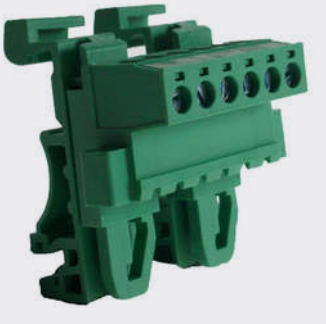

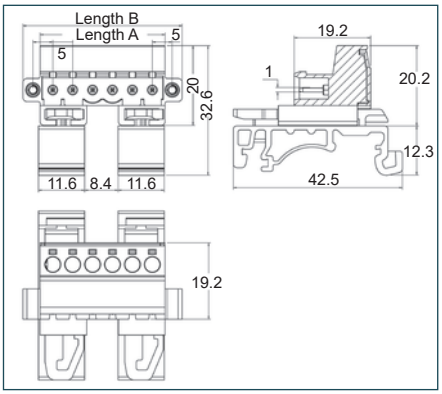

+44 (0)1638 716101 | sales@camdenboss.com | www.camdenboss.com

We operate a constant improvement policy, our products are subject to change without notice.
Vers 1