5.08mm pitch pluggable rising clamp terminal blocks

Product overview

- 2-24 pole solid block
- Professional rising clamp terminals
- Moulded in green UL94-V0 flame retardant PA66
- Cable acceptance - 0.32 to 1.6mm^2 (28-14AWG) solid and stranded cable
- Pluggable male and female connectors
- Open and closed headers
- Horizontal and vertical female plug styles
- Polarised mouldings
- Anti solder wicking
- Captive screws and guided pin alignment
- cULus, VDE approved

SPECIFICATION	
Rating	UL=15A/300V, VDE=20A/450V
Insulation resistance	500M Ω/500V
Withstand voltage	AC2000V/1min
Contact resistance	20mΩ (max)
Working temperature	-40°C to +105°C
Mouldings	UL94-V0 flame retardant PA66
Pin/terminal	Tin plated brass
Rising clamp	Brass, nickel plated
Screw/torque	M3 steel, zinc plated 0.5Nm
Recommended PCB hole size	ø1.7mm

Female connector

PART NO.	POLES	LENGTH
CTBP9208/2	2	10.2mm
CTBP9208/3	3	15.2mm
CTBP9208/4	4	20.3mm
CTBP9208/5	5	25.4mm
CTBP9208/6	6	30.5mm
CTBP9208/7	7	35.6mm
CTBP9208/8	8	40.6mm
CTBP9208/9	9	45.7mm
CTBP9208/10	10	50.8mm
CTBP9208/11	11	55.9mm
CTBP9208/12	12	61mm

CTBP9208



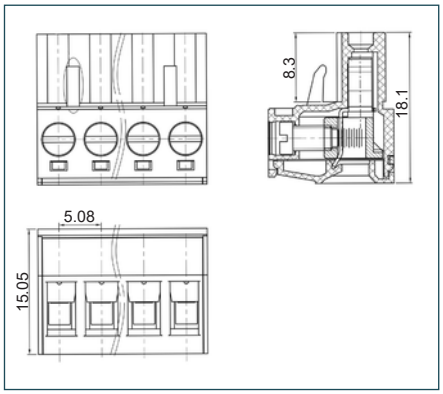

Female vertical connector (standard)

PART NO.	POLES	LENGTH
CTBP92VJ/2S	2	10.2mm
CTBP92VJ/3S	3	15.2mm
CTBP92VJ/4S	4	20.3mm
CTBP92VJ/5S	5	25.4mm
CTBP92VJ/6S	6	30.5mm
CTBP92VJ/7S	7	35.6mm
CTBP92VJ/8S	8	40.6mm
CTBP92VJ/9S	9	45.7mm
CTBP92VJ/10S	10	50.8mm
CTBP92VJ/11S	11	55.9mm
CTBP92VJ/12S	12	61mm

CTBP92VJ S



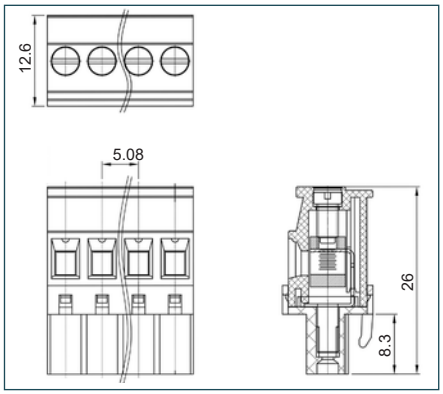

Female vertical connector (reversed)

PART NO.	POLES	LENGTH
CTBP92VJ/2R	2	10.2mm
CTBP92VJ/3R	3	15.2mm
CTBP92VJ/4R	4	20.3mm
CTBP92VJ/5R	5	25.4mm
CTBP92VJ/6R	6	30.5mm
CTBP92VJ/7R	7	35.6mm
CTBP92VJ/8R	8	40.6mm
CTBP92VJ/9R	9	45.7mm
CTBP92VJ/10R	10	50.8mm
CTBP92VJ/11R	11	55.9mm
CTBP92VJ/12R	12	61mm

CTBP92VJ R



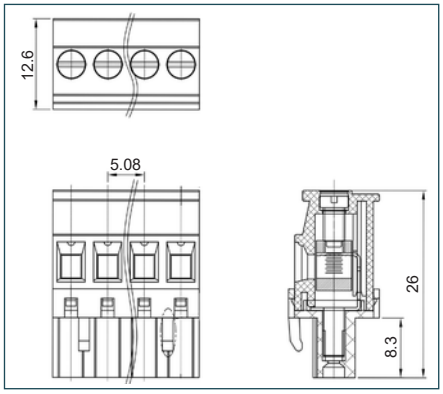

+44 (0)1638 716101 | sales@camdenboss.com | www.camdenboss.com

We operate a constant improvement policy, our products are subject to change without notice.

Vers 1

PCB mounting male vertical connector (closed ended)

PART NO.	POLES	LENGTH
CTBP9308/2	2	11.6mm
CTBP9308/3	3	16.6mm
CTBP9308/4	4	21.7mm
CTBP9308/5	5	26.8mm
CTBP9308/6	6	31.9mm
CTBP9308/7	7	37.0mm
CTBP9308/8	8	42.0mm
CTBP9308/9	9	47.1mm
CTBP9308/10	10	52.2mm
CTBP9308/11	11	57.3mm
CTBP9308/12	12	62.4mm

CTBP9308



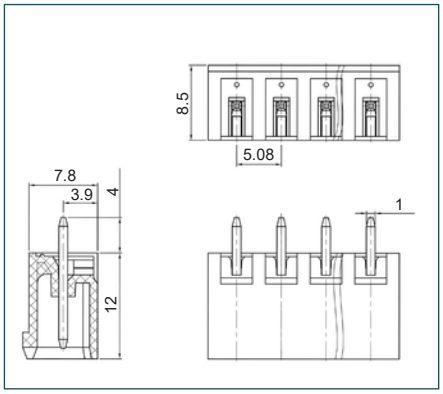

PCB mounting male horizontal connector (closed ended)

PART NO.	POLES	LENGTH
CTBP9358/2	2	11.6mm
CTBP9358/3	3	16.6mm
CTBP9358/4	4	21.7mm
CTBP9358/5	5	26.8mm
CTBP9358/6	6	31.9mm
CTBP9358/7	7	37.0mm
CTBP9358/8	8	42.0mm
CTBP9358/9	9	47.1mm
CTBP9358/10	10	52.2mm
CTBP9358/11	11	57.3mm
CTBP9358/12	12	62.4mm

CTBP9358



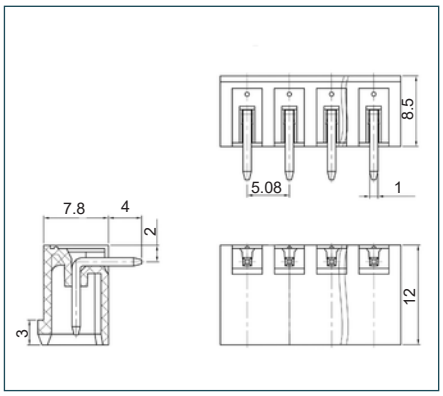

PCB mounting male vertical connector (open ended)

PART NO.	POLES	LENGTH
CTBP9308/2AO	2	10.2mm
CTBP9308/3AO	3	15.2mm
CTBP9308/4AO	4	20.3mm
CTBP9308/5AO	5	25.4mm
CTBP9308/6AO	6	30.5mm
CTBP9308/7AO	7	35.6mm
CTBP9308/8AO	8	40.6mm
CTBP9308/9AO	9	45.7mm
CTBP9308/10AO	10	50.8mm
CTBP9308/11AO	11	55.9mm
CTBP9308/12AO	12	61mm

CTBP9308 AO



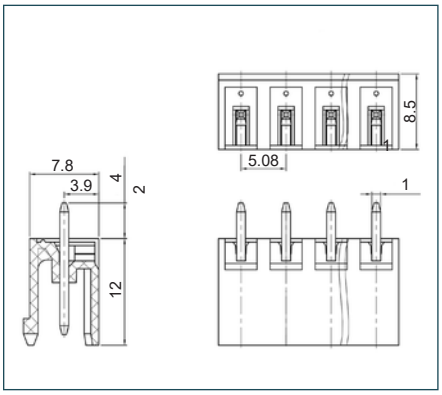

PCB mounting male horizontal connector (open ended)

PART NO.	POLES	LENGTH
CTBP9358/2AO	2	10.2mm
CTBP9358/3AO	3	15.2mm
CTBP9358/4AO	4	20.3mm
CTBP9358/5AO	5	25.4mm
CTBP9358/6AO	6	30.5mm
CTBP9358/7AO	7	35.6mm
CTBP9358/8AO	8	40.6mm
CTBP9358/9AO	9	45.7mm
CTBP9358/10AO	10	50.8mm
CTBP9358/11AO	11	55.9mm
CTBP9358/12AO	12	61mm

CTBP9358 AO



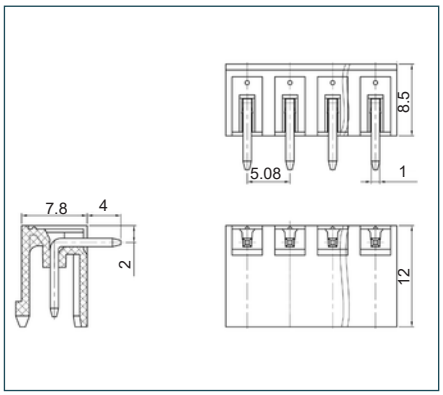

+44 (0)1638 716101 | sales@camdenboss.com | www.camdenboss.com

We operate a constant improvement policy, our products are subject to change without notice.

Vers 1

bsi ISO 9001 Quality Management Systems CERTIFIED FM 28614