mortise lock

R412007959

Mechanical accessories



Technical data

Industry	Industrial
For series	AS2 AS3 AS5
Type	Standard locking, with key

Material

Part No.	R412007959

Dimensions in mm

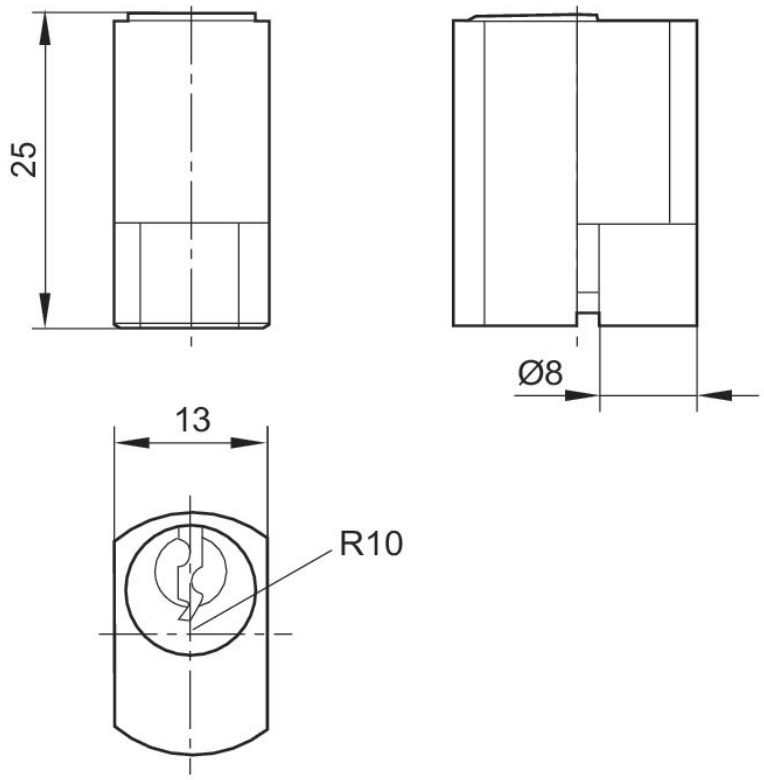

Application example

