Modulbox Compact - 8M XTS A Version - 35.0807000.BL

- DIN Rail mounting enclosure to suit varying electronic and electrical applications
- Terminal blocks/connectors can be mounted on either side of the enclosure
- Top panel is produced as part of the mould (non-removeable)
- Customisation options are available including machining and/or printing to customer specific requirements
- Kit supplied includes, base, cover and DIN rail hook



Hitaltech SA/NV
(Sales Benelux, France & Italy)
T: +32 2725 2075
E: europe-sales@hitaltech.com

Hitaltech UK Ltd
(Sales UK & Eire)
T: +44 (0) 1253 899910
E: uksales@hitaltech.co.uk

Hitaltech Gmbh
(Sales Germany)
T: +49 (0) 351 65 57 39 10
E: de-verkauf@hitaltech.com

Hitaltech Corp. Japan
(Sales Asia)
T: +81 (0)467 23 81 00
E: japan-sales@hitaltech.com

Hitaltech Headquarters
(Sales for the Rest of the World)
T: +32 2725 2075
E: europe-sales@hitaltech.com

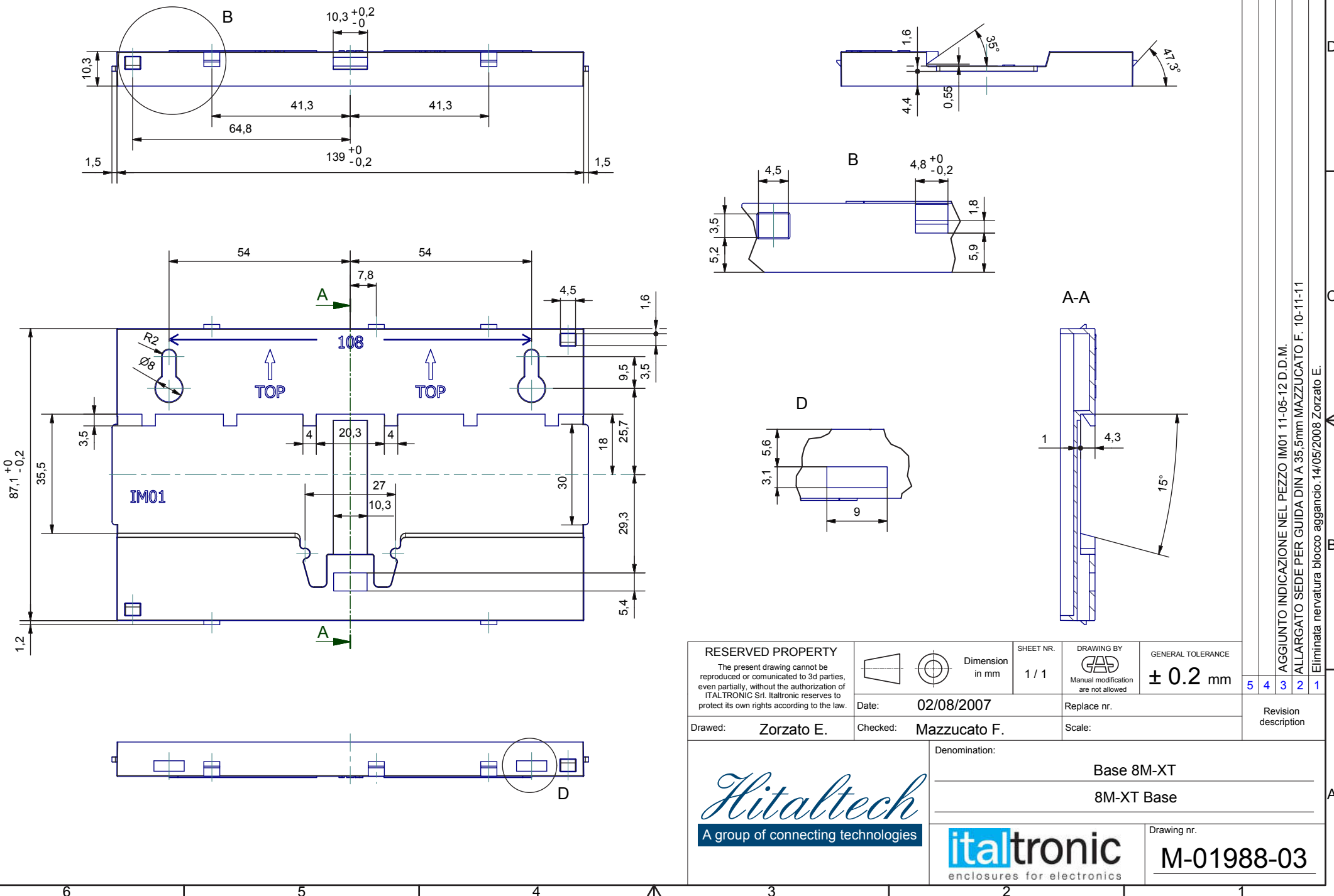

RESERVED PROPERTY
The present drawing cannot be reproduced or comunicated to 3d parties, even partially, without the authorization of ITALTRONIC Srl. Italtronic reserves to protect its own rights according to the law.

Dimension in mm	SHEET NR. 1 / 1	DRAWING BY Manual modification are not allowed	GENERAL TOLERANCE ± 0.2 mm	
Date: 02/08/2007		Replace nr.		
Drawed: Zorzato E.	Checked: Mazzucato F.	Scale:		

Revision	description
5	AGGIUNTO INDICAZIONE NEL PEZZO IM01 11-05-12 D.D.M.
4	ALLARGATO SEDE PER GUIDA DIN A 35,5mm MAZZUCATO F. 10-11-11
3	Eliminata nervatura blocco aggancio.14/05/2008 Zorzato E.
2	
1	

Hitaltech
A group of connecting technologies

Denomination:
Base 8M-XT
8M-XT Base

italtronic
enclosures for electronics

Drawing nr.
M-01988-03

Assembly

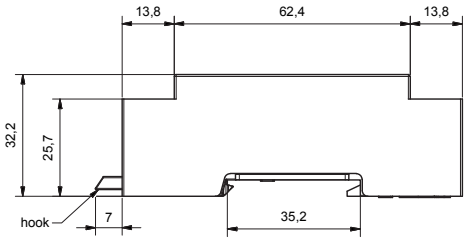

J-J (1 : 1)

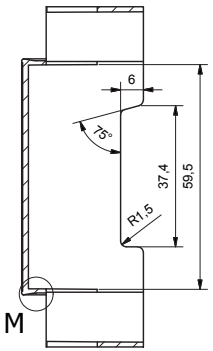

H-H (1 : 1)

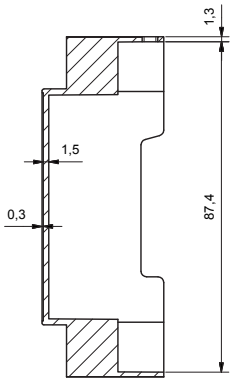

Body enclosure

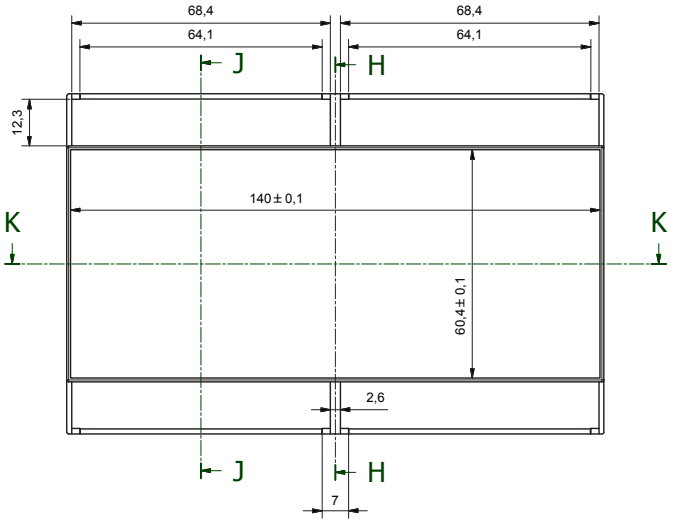

M (2 : 1)

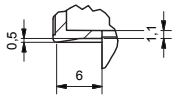

N (2 : 1)

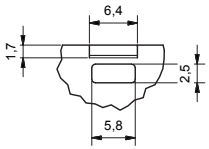

L (2 : 1)

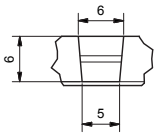

K-K (1 : 1)

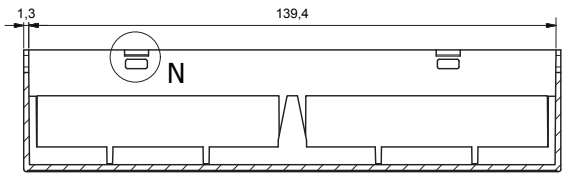

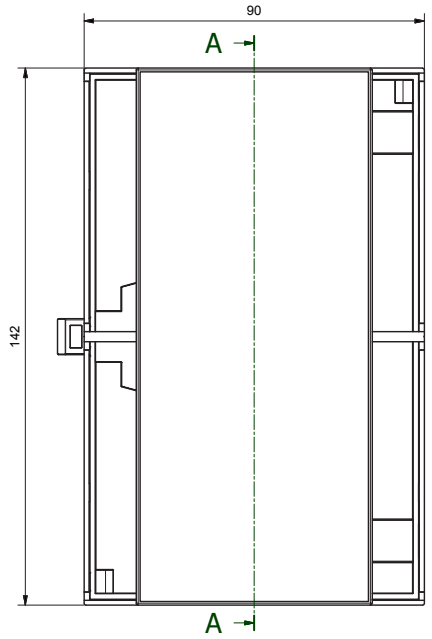

A-A (1 : 1)

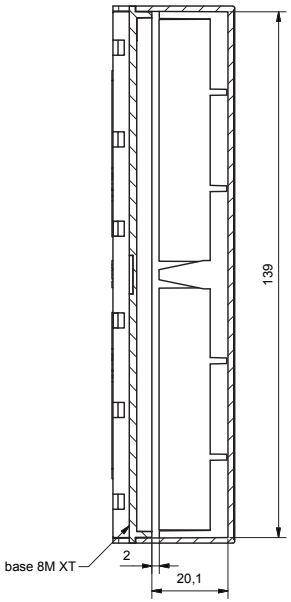

Dimension of PCB

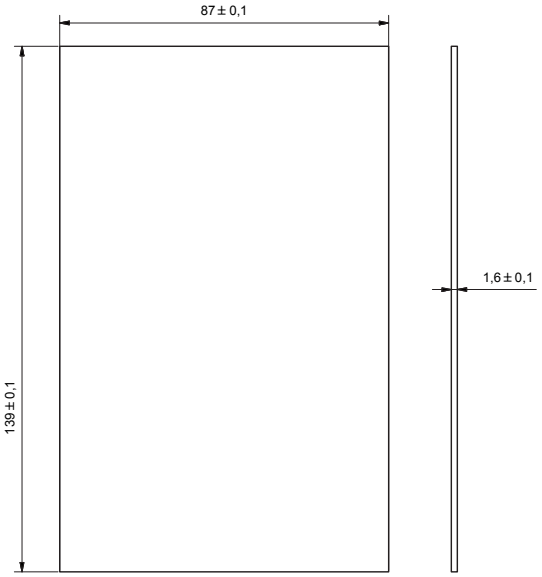

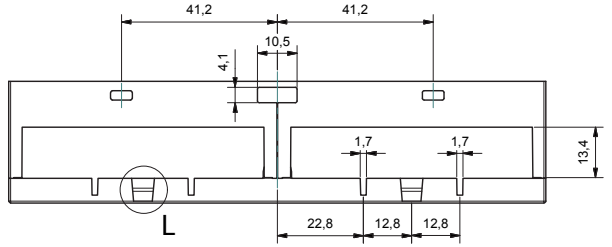

Da 0,5 a 3	Oltre 3 fino a 6	Oltre 6 fino a 30	Oltre 30 fino a 120	Oltre 120
± 0,1	± 0,1	± 0,2	± 0,3	± 0,5

RESERVED PROPERTY
The present drawing cannot be reproduced or comunicated to 3d parties, even partially, without the authorization of ITALTRONIC Srl. Italtronic reserves to protect its own rights according to the law.

Dimension in mm

SHEET NR. 1 / 1

DRAWING BY Manual modification are not allowed

GENERAL TOLERANCE **UNI EN 22768/1 Media (m)**

Date: 19/05/2014

Drawed: Rigato N.

Checked: Dalla Montà D.

Replace nr.

Scale:

5	4	3	2	1

Revision description

Denomination:

Contenitore Modulbox XTS 8MHC33-A chiuso compact

Enclosure Modulbox XTS 8MHC33-A closed compact

Hitaltech
A group of connecting technologies

italtronic
enclosures for electronics

Drawing nr.
M-05181-00

REVISIONE			
Rev. n°	Descrizione	Data	Eseguita da
1	Modificato parti gancio.Changed parts hook.	17/07/13	Rigato N.
2	Modificato parti gancio.Changed parts hook.	31/01/14	Rigato N.

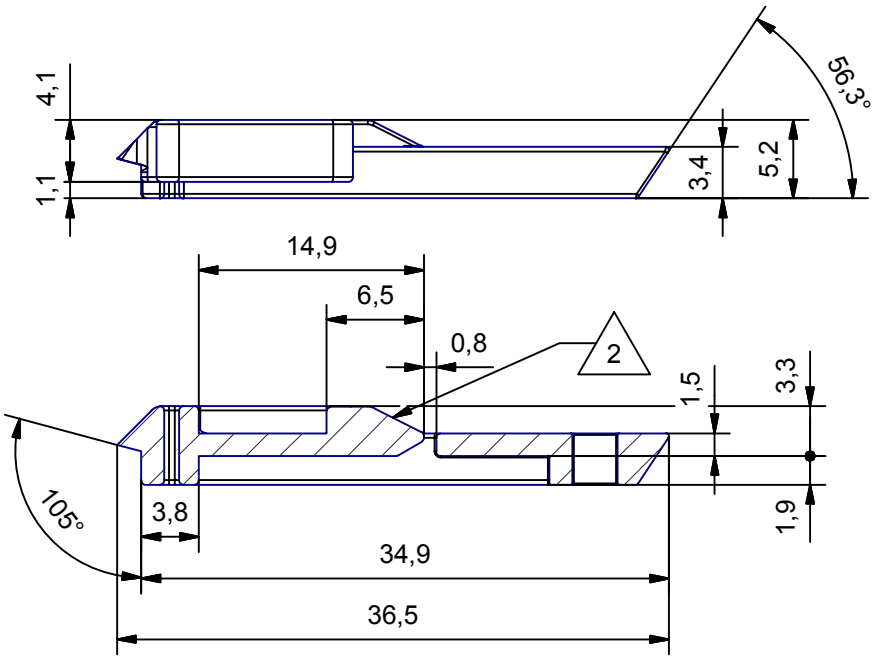

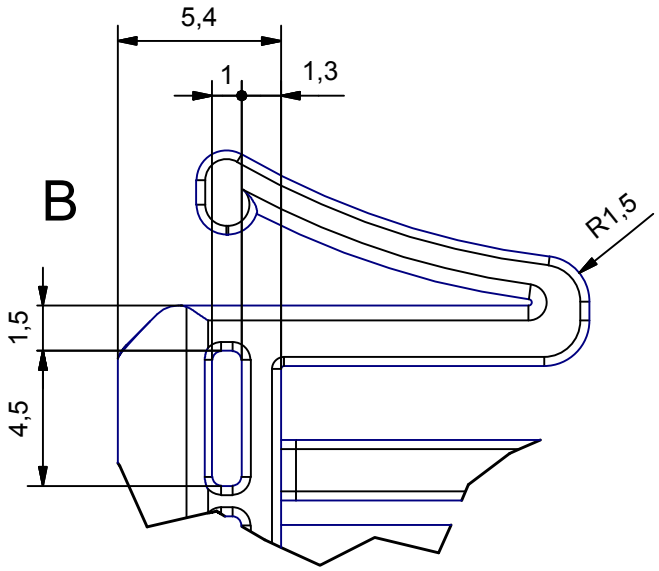

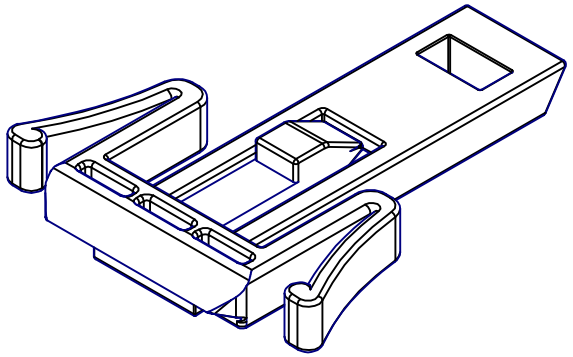

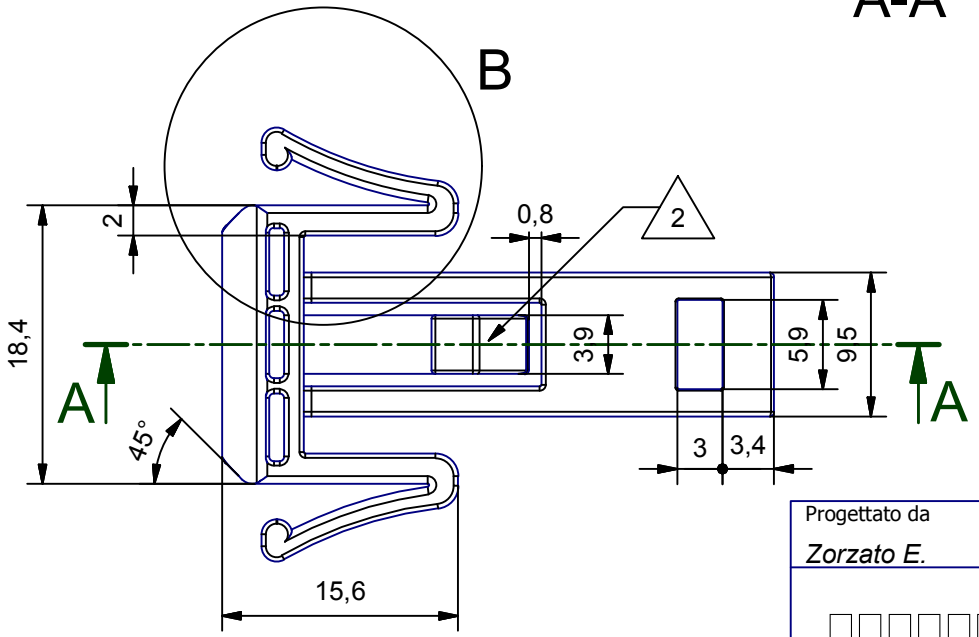

Tolleranze generali: ± 0.2 mm

Progettato da	Verificato da	Data	Sostituisce il
Zorzato E.	*Mazzucato F.*	12/03/2007	

□□□□□□□□□□□□□□□□□□□

□□□□□□ □□□□□□□□□□

Nuovo aggancio lungo MODULBOX

M-01900-02	Edizione 00	Foglio 1 / 1