Differential pressure transmitter Eco
Model A2G-55

for further approvals
see page 4

Applications

- For measuring differential pressures and static pressures
- Monitoring of filters
- Overpressure monitoring in clean rooms and laboratories

Special features

- Output signal 0 ... 10 V or 4 ... 20 mA
- Maintenance-free
- Simple operation
- High accuracy



Differential pressure transmitter Eco, model A2G-55

Description

The model A2G-55 Eco differential pressure transmitter is used for detecting small air flows in air-conditioning systems and for measuring low pressures in environmental, laboratory and clean room applications (air, non-aggressive gases).

It is based on the piezoresistive measuring principle. This compact differential pressure transmitter offers excellent performance and high quality at an attractive price.

The A2G-55 is available in a variety of unchangeable pressure ranges. Electrical analogue output signals for both measurement parameters (0 ... 10 V or 4 ... 20 mA) enable the direct connection to control systems or the building automation system. With its ingress protection of IP65, the measuring instrument is ideally suited for outdoor application.

Data sheets showing similar products:
Differential pressure transmitter; model A2G-50; see data sheet PE 88.02

Part of your business

Specifications

Specifications	
Measuring element	Piezo measuring cell
Measuring range	■ 0 ... 250 Pa ■ 0 ... 500 Pa ■ 0 ... 750 Pa ■ 0 ... 1,000 Pa ■ 0 ... 1,250 Pa ■ 0 ... 2,500 Pa ■ 0 ... 3,750 Pa ■ 0 ... 5,000 Pa
Accuracy	±2.5 % FS
Type of mounting	Vertical wall mounting
Process connection	For hoses with inner diameter 5.5 mm
Electrical connection	Cable gland M16 Screw terminals max. 1.5 mm²
Output signal	0 … 10 V (4 … 20 mA optional)
Supply voltage	DC 13 ... 32 V (AC 13 ... 32 V optional)
Case	Plastic (ABS)
Permissible temperatures ■ Ambient temperature ■ Medium temperature	 -10 ... +50 °C -10 ... +50 °C
Ingress protection	IP65
Weight	70 g

Dimensions in mm

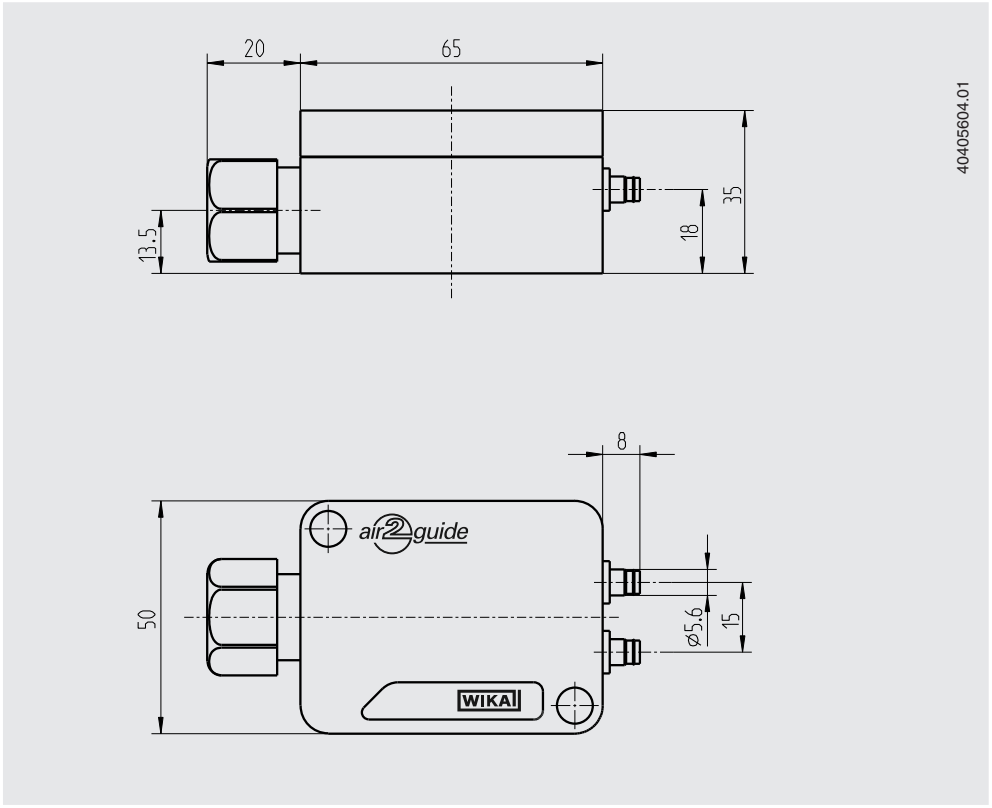

Electrical connection

Output signal DC 0 ... 10 V, 3-wire

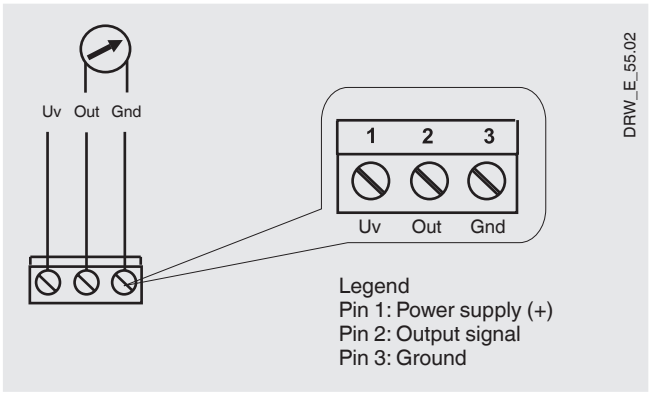

Output signal 4 ... 20 mA, 2-wire

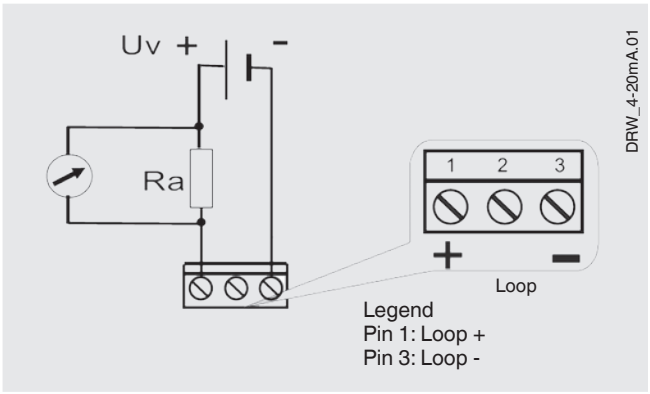

Accessories

Description		Order number
Measuring hoses		
	PVC hose, inner diameter 4 mm, roll at 25 m	40217841
	PVC hose, inner diameter 6 mm, roll at 25 m	40217850
	Silicone hose, inner diameter 4 mm, roll at 25 m	40208940
	Silicone hose, inner diameter 6 mm, roll at 25 m	40208958
Duct connector for hose 4 and 6 mm 		40217507

Approvals

Logo	Description	Country
CE	**EC declaration of conformity** ■ EMC directive ■ RoHS conformity ■ WEEE directive	European Union
EAC	**EAC (option)** Import certificate	Eurasian Economic Community
	GOST (option) Metrology, measurement technology	Russia
	KazInMetr (option) Metrology, measurement technology	Kazakhstan
-	**MTSCHS (option)** Permission for commissioning	Kazakhstan
	UkrSEPRO (option) Metrology, measurement technology	Ukraine
	Uzstandard (option) Metrology, measurement technology	Uzbekistan

Certificates (option)

- 2.2 test report
- 3.1 inspection certificate

Approvals and certificates, see website

Scope of delivery

Differential pressure transmitter

Ordering information
Model / Measuring range

© 06/2009 WIKA Alexander Wiegand SE & Co. KG, all rights reserved.
The specifications given in this document represent the state of engineering at the time of publishing.
We reserve the right to make modifications to the specifications and materials.

WIKA Alexander Wiegand SE & Co. KG
Alexander-Wiegand-Straße 30
63911 Klingenberg/Germany
Tel. +49 9372 132-0
Fax +49 9372 132-406
info@wika.de
www.wika.de