AL1402

IO-Link master with PROFINET interface

IO-Link Master PFL PN 8P IP67

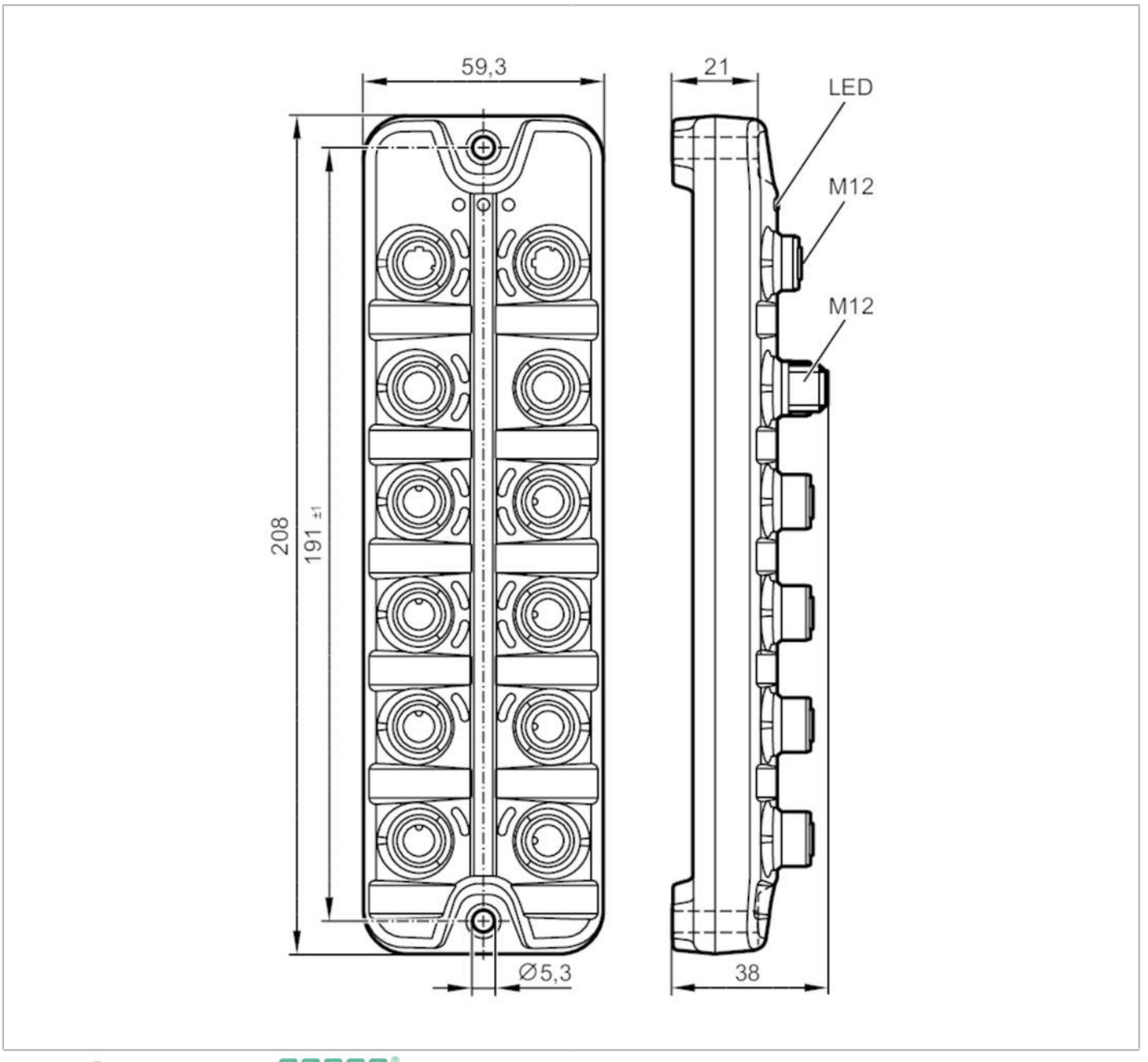

Application		
Application		I/O modules for field applications
Daisy-chain function		power supply; fieldbus interface
Electrical data		
Operating voltage	[V]	20...30 DC; (US ; to SELV/PELV)
Current consumption	[mA]	300...3900; (US)
Protection class		III
Additional voltage supply	[V]	20...30 DC; (UA)
Actuator supply UA		
Max. current load total	[A]	8

AL1402

IO-Link master with PROFINET interface

IO-Link Master PFL PN 8P IP67

Current rating per port	[A]	2; (adjustable: 0...2; Factory setting: 2)
Sensor supply US		
Max. current load total	[A]	3.6
Current rating per port	[A]	2; (adjustable: 0...2; Factory setting: 0,45)
Inputs / outputs		
Total number of inputs and outputs		16; (configurable)
Number of inputs and outputs		Number of digital inputs: 12; Number of digital outputs: 12
Inputs		
Number of digital inputs		12; (IO-Link Port Class A: 4 x 2; IO-Link Port Class B: 4 x 1)
Switching level high	[V]	11...30
Switching level low	[V]	0...5
Digital inputs protected against short circuits		yes
Outputs		
Number of digital outputs		12; (IO-Link Port Class A: 4 x 1; IO-Link Port Class B: 4 x 2)
Short-circuit proof		yes
Actuator supply UA		
Max. current load per output	[mA]	2000
Sensor supply US		
Max. current load per output	[mA]	2000
Interfaces		
Communication interface		Ethernet; IO-Link
Ethernet - PROFINET		
Transmission standard		100Base-TX
Transmission rate		100 MBit/s
Protocol		PROFINET
Factory settings		IP address: 0.0.0.0
		subnet mask: 0.0.0.0
		gateway IP address: 0.0.0.0
		MAC address: see type label
Note on interfaces		IO-Link Integration Edition 2
		CC-C (Conformance Class C) (IRT-Switch)
		S2 redundancy
		Netload Class III
		CiR (Configuration in Run)
		SNMP (Simple Network Management Protocol)
		MRP (Media Redundancy Protocol)
		Supported network topologies: line
		ring
IO-Link Master		
Transmission type		COM1 (4,8 kBaud); COM2 (38,4 kBaud); COM3 (230,4 kBaud)
IO-Link revision		1.1
Number of ports class A		4
Number of ports class B		4

AL1402

IO-Link master with PROFINET interface

IO-Link Master PFL PN 8P IP67

Operating conditions			
Ambient temperature	[°C]	-25...60	
Storage temperature	[°C]	-25...85	
Max. relative air humidity	[%]	90	
Protection		IP 65; IP 66; IP 67	
Protection rating (NEMA 250)		6P	
Pollution degree		2	
Chemical media		ISO 16750-5	AA, BA, BD, HLP, CC, DB, DC, DD, CA
		NEMA 250 5.13.1	AA

Tests / approvals			
EMC		EN 61000-6-2	
		EN 61000-6-4	
Shock resistance		DIN EN 60068-2-27	
Vibration resistance		DIN EN 60068-2-64 2009-04	
		DIN EN 60068-2-6 2008-10	
MTTF	[years]	43	

Mechanical data		
Weight	[g]	412.1
Materials		housing: PA orange; socket: brass nickel-plated
Sealing material		FKM

Remarks	
Remarks	For further information please see the operating instructions.
Pack quantity	1 pcs.

Electrical connection - Ethernet

Connector: M12; coding: D; Sealing: FKM



IN / OUT XF1, XF2	
1	TX +
2	RX +
3	TX -
4	RX -
5	not used

AL1402

IO-Link master with PROFINET interface

IO-Link Master PFL PN 8P IP67

Electrical connection - Process connection

Connector: M12; coding: A; Sealing: FKM

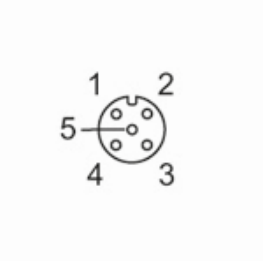

IO-Link Port Class B X1...X4

1	Sensor supply (US) L +
2	actuator supply / digital output (UA) L+
3	Sensor supply (US) L-
4	C/Q IO-Link
5	actuator supply (UA) L-

IO-Link Port Class A X5...X8

1	Sensor supply (US) L+
2	digital input (US)
3	Sensor supply (US) L-
4	C/Q IO-Link
5	not used

Electrical connection - power supply IN

Connector: M12; coding: L



XD1

1	+ 24 V DC (US) brown
2	GND (UA) white
3	GND (US) blue
4	+ 24 V DC (UA) black
5	FE grey

Electrical connection - power supply OUT

Connector: M12; coding: L; Sealing: FKM



AL1402

IO-Link master with PROFINET interface

IO-Link Master PFL PN 8P IP67

XD2	
1	+ 24 V DC (US) brown
2	GND (UA) white
3	GND (US) blue
4	+ 24 V DC (UA) black
5	FE grey