High-performance Fan Heater CS 032 / CSF 032 Series 1,000W (Semiconductor)



Photo 1: Fan heater CS 032



Photo 2: Fan heater CSF 032

Compact and slim design
High heating performance
Double insulated
With or without thermostat
Quick connection

The compact high performance fan heater prevents formation of condensation and frost and provides an evenly distributed interior air temperature in enclosures with electric/electronic components. The plastic housing provides double insulation and acts as protection against contact. Two screw connectors at the front of CS 032 allow comfortable wiring of an external thermostat. The CSF 032 is equipped with a pre-set thermostat. Both models were designed as stationary units for wall fixing. A fan heater for fixing on the bottom of the enclosure is available on request.

Technical Data

Heating element	PTC resistor - temperature limiting
Surface temperature	max. 80°C (176°F), except upper protective grille
	at 20°C (68°F) ambient temperature
Air outlet temperature	max. 110°C (212°F), 50mm above grille
Temperature safety cut-out	to protect against overheating in case of fan failure,
	automatic reset
Axial fan, ball bearing	air flow 63m³/h, free flow
	service life 70,000h at 25°C (77°F)
Connection	male power insert connector according to IEC320 C18
Fuse	10A time lag (T) integrated in connector - exchangeable
Casing	plastic according to UL94 V-0, black
Mounting	clip for 35mm DIN rail, EN 60715 or
	screw fixing (M5), tightening torque 2Nm max.
Fitting position	airflow direction up
Dimensions	152.5 x 88 x 66mm
Weight	approx. 0.5kg
Operation / Storage temperature	-40 to +60°C (-40 to +140°F) / -40 to +70°C (-40 to +158°F)
Operation / Storage humidity	max. 90% RH (non-condensing)
Protection type / Protection class	IP20 / II (double insulated)
Approvals	VDE + UL File No. E234324

Important note: Connectors and cables for electrical connection are not included in the delivery. Connection cables can be ordered separately. See Accessories on next page.

Fan heater CS 032 series (without thermostat)

Art. No. Clip fixing	Art. No. Screw fixing	Operating voltage	Heating capacity[1)]	Inrush current max.
03209.0-00	03209.0-01	220-240VAC, 50/60Hz	1,000W	12A
03209.9-00	03209.9-01	100-120VAC, 50/60Hz	1,000W	18A

Fan heater CSF 032 series (with thermostat)

Art. No. Clip fixing	Art. No. Screw fixing	Operating voltage	Heating capacity[1)]	Inrush current max.	Switch-off temperature[2)]	Switch-on temperature[2)]
03201.0-00	03201.0-01	220-240VAC, 50/60Hz	1,000W	12A	+25°C (+77°F)	+15°C (+59°F)
03202.0-00	03202.0-01	220-240VAC, 50/60Hz	1,000W	12A	+15°C (+59°F)	+5°C (+41°F)
03201.9-00	03201.9-01	100-120VAC, 50/60Hz	1,000W	18A	+25°C (+77°F)	+15°C (+59°F)
03202.9-00	03202.9-01	100-120VAC, 50/60Hz	1,000W	18A	+15°C (+59°F)	+5°C (+41°F)

[1)] at 25°C (77°F) ambient temperature; [2)] tolerance ± 5K

Specifications are subject to change without notice. Errors and omissions excepted. Suitability of this product for its intended use and any associated risks must be determined by the end customer/ buyer in its final application. 26.10.2011

Dimensional Drawing

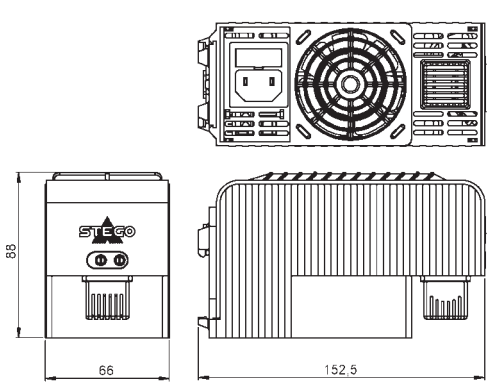

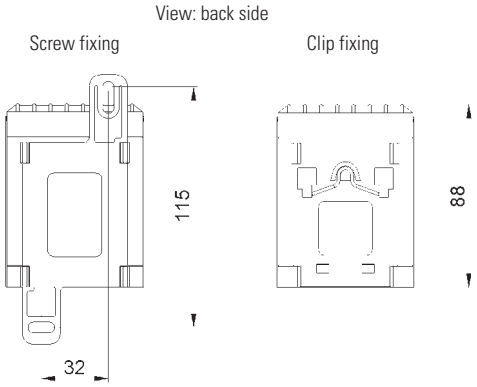

Heating capacity / Ambient temperature diagram

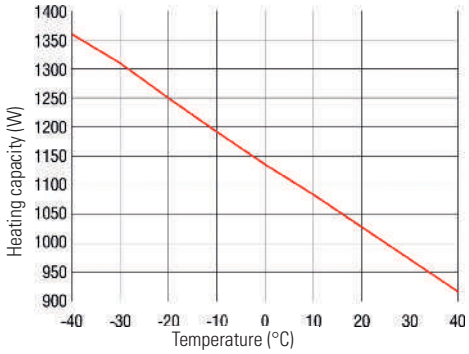

Accessories

Connection cable with female power insert connector according IEC320 C17

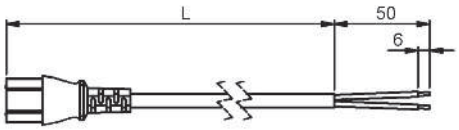

Art. No.	Length (L)
244379	1.0m
244380	2.0m

Retaining Clip

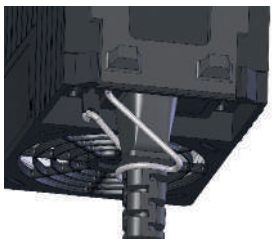

Photo: Retaining Clip art. no. 237009
in built-in state

Art. No.	Note
237009	Suitable for female power insert connector on connection cable 244379 and 244380

Specifications are subject to change without notice. Errors and omissions excepted. Suitability of this product for its intended use and any associated risks must be determined by the end customer/ buyer in its final application.
26.10.2011