Instruction Leaflet

25A, 32A & 63A Door interlocked isolator switches & accessories

Three door interlocked isolator switches in standard 3 pole configuration which may be extended by add-on units, i.e. switched neutral and auxiliary contact blocks. Isolator switch ratings 25 amp, 32 amp and 63 amp.

Item	RS stock no.
Door interlocked isolator 25 amp (AC-1)	333-495
Door interlocked isolator 32 amp (AC-1)	333-502
Door interlocked isolator 63 amp (AC-1)	333-518
Auxiliary contact block 6 amp (AC-11)	333-546
Switched neutral 25/32 amp (AC-1)	333-524
Switched neutral 63 amp (AC-1)	333-530

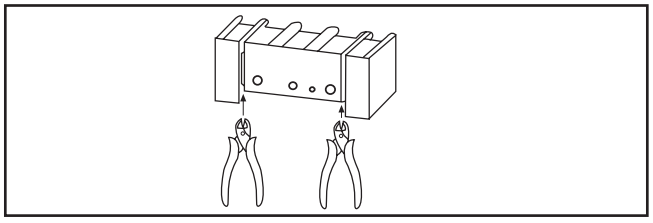

Top hat type EN 50 022 Din rail may be used (**RS** stock no. 424-131).
Shroud may be cut down for 3 pole only)

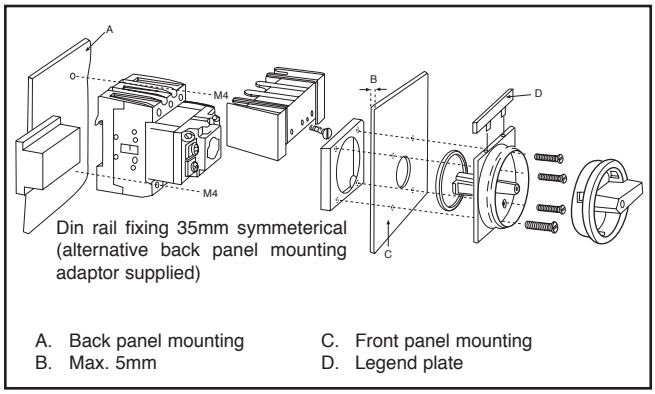

Basic mounting details 25 and 32A switches

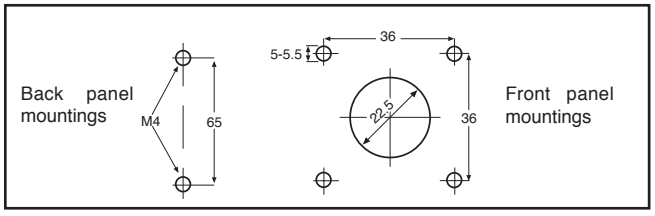

Basic mounting details 63 amp switch

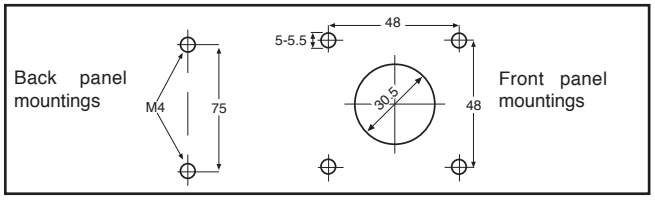

Dimensions

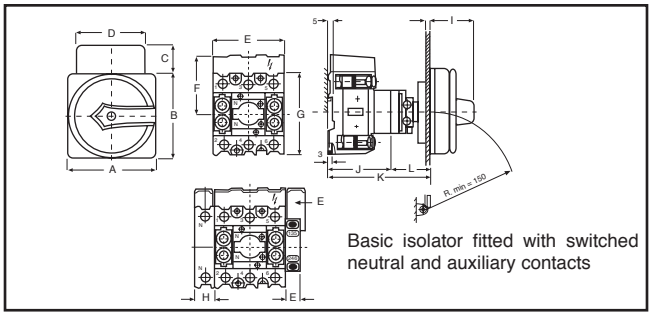

25, 32 amp		63 amp	
A	65	A	87
B	65	B	87
C	17	C	27
D	48	D	87
E	49	E	72
F	49	F	60
G	70	G	70
H	15	H	18
I	35	I	44
J	58	J	65
K Min/max.	86/ 112	K Min/max.	103/ 103/118
L Min/max.	38/ 154	L Min/max.	38/ 154

Fitting on add on units

The switch neutral may be fitted to either side of the basic switch. The terminal screws and actuating tongue determine how the accessory is orientated prior to fitting. With the basic switch in the off position, insert the actuating tongue into the square aperture at the side of the switch, lift the switched neutral forward and inward, against the spring pressure, to engage the two small locating pips. The two self tapping screws may now be used to secure the add-on to the basic switch.

The auxiliary contact block may also be fitted to either side of the basic switch, the method of fixing being the same as for the switched neutral. The terminal marking conform to the BS5472: 1977 (EN50005) the first number being the sequence number, the second being a function figure -(i.e 1 and 2 indicate N/C or 'break' contacts, 3 and 4 indicate N/O or 'make' contacts). The same specification suggests that the lower number shall be chosen for incoming and the higher number for outgoing, if the terminals are required to be specifically identified.

The information provided in **RS** technical literature is believed to be accurate and reliable; however, RS Components assumes no responsibility for inaccuracies or omissions, or for the use of this information, and all use of such information shall be entirely at the user's own risk.
No responsibility is assumed by RS Components for any infringements of patents or other rights of third parties which may result from its use.
Specifications shown in RS Components technical literature are subject to change without notice.

RS Components, PO Box 99, Corby, Northants, NN17 9RS
Telephone: 01536 201234
An Electrocomponents Company
© RS Components 1997