E12605

Angle bracket

ANGLE BRACKET MQ2 / IQ2

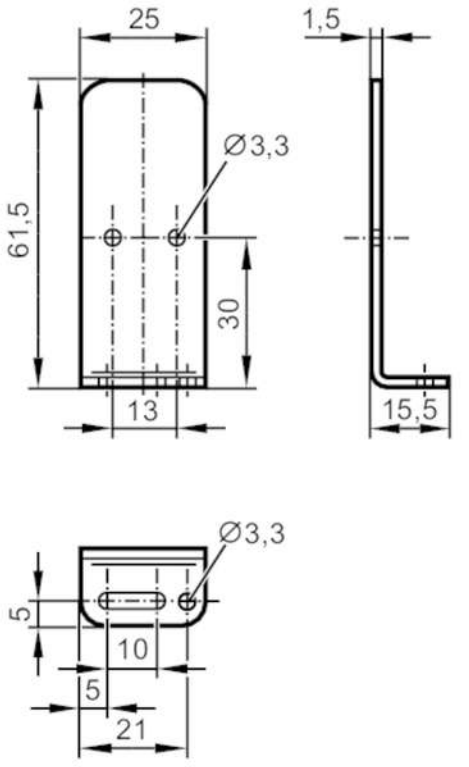

Application		
Design		for types, IQ2, MQ2
Mechanical data		
Weight	[g]	22.1
Dimensions	[mm]	25 x 61.5 x 15.5
Materials		stainless steel (1.4301 / 304)
Remarks		
Pack quantity		1 pcs.