PRODUCT DETAILS
ARTICLE: 23603

WHEEL Z 100X30/40 BB SWIVEL FORK M40L/50



Wheel series Z

Cast iron wheels with polyurethane coating 95 Sh.A available with shielded precision ball bearings.
Wheel fitted with ball bearings.

Castor series M40

M40 series, medium-heavy duty pressed steel forks, swivel with double ball races & 'water resistant' protections. Zincplated.

Technical data

Wheel diameter	D	100 mm
Tyre width	E	30,0 mm
Bearing seat diameter	s	35 mm
Bore diameter	d	15 mm
Outer faces bearings distance	V	38 mm
Weight article		1,810 kg
Hub width	L	40 mm
Overall height	H	137 mm
Top plate outer dimensions	AxB	105x85 mm
Bolt hole spacing	axb	76x55 mm
Bolt hole spacing	axb	80x60 mm
Fixing bolt diameter	g	M8
Offset	F	41 mm
Fork width	U	50 mm
Load Capacity		300 kg

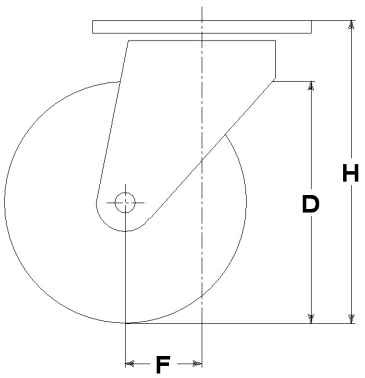

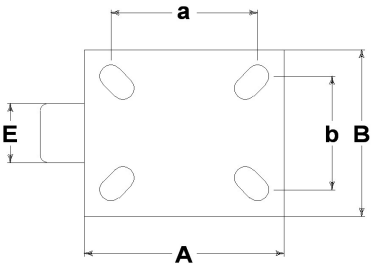

Related Articles

Spare part wheel: 7005CC
Version with thread-guards: 23603PF
Version with trailing brake: 23603FR

GENERAL INFORMATION / RECOMMENDATIONS AND WARNINGS
The cited text and the complete catalogue in their most up-dated versions are available in the OEM's website page www.lagspa.it/downloads. The dimensions, descriptions, specifications and illustrations herein are indicative and subject to variations without notice. The fact that products are illustrated herein does not necessarily imply they are available from stock nor does it place us under any obligation to supply them.
Tests carried out refer to the original products with original accessories: the replacement of one of the components with others of different manufacture might prevent the same results from being achieved and will automatically invalidate any guarantee. Please contact our technical service concerning any special application.