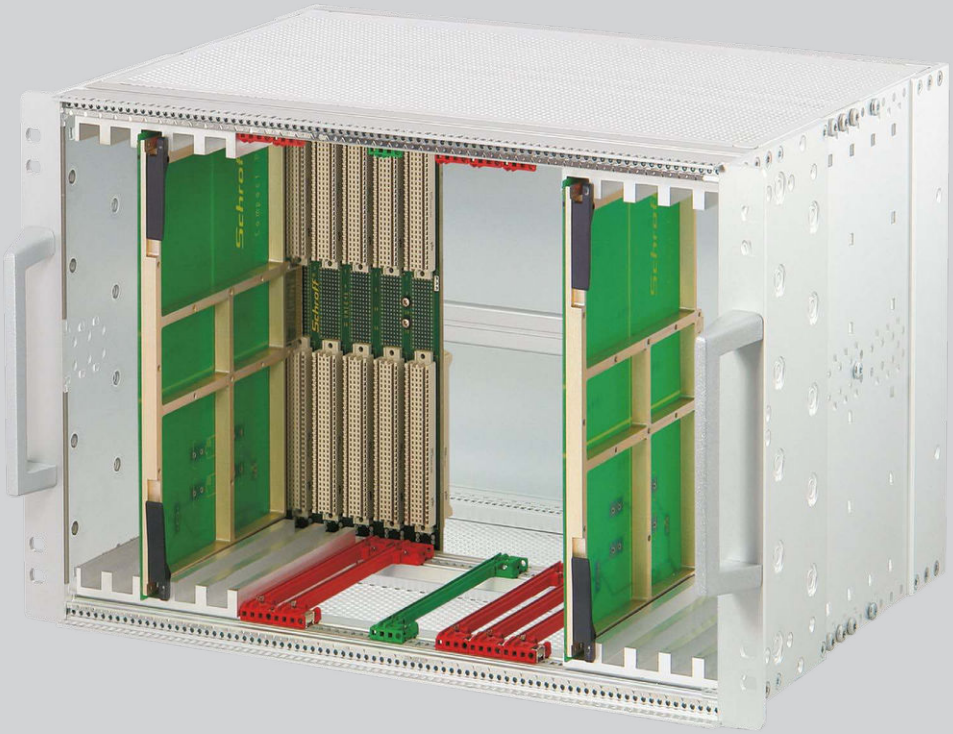

CONNECT AND PROTECT

EuropacPRO Rugged

04/2023

nVent SCHROFF

Subracks – EuropacPRO Rugged

OVERVIEW

MAIN KATALOG

Cabinets 1

Wall mounted cases 2

Accessories for cabinets and wall mounted cases . . 3

Climate control . . 4

Electronics cases 5

Subracks/ 19" chassis 6

Front panels, plug-in units 7

Systems 8

Power supply units 9

Backplanes 10

Connectors, front panel component system 11

Appendix 12



06112020



06112004

"rugged" horizontal rail with 3 hole fixing for increased stability (+60 % compared to 2 hole fixing of "heavy" horizontal rail)

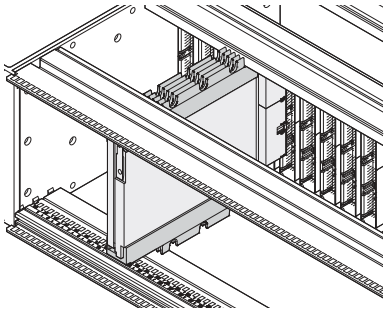

06112052

Special adaptor rails allow conducted cooled assemblies to be fitted

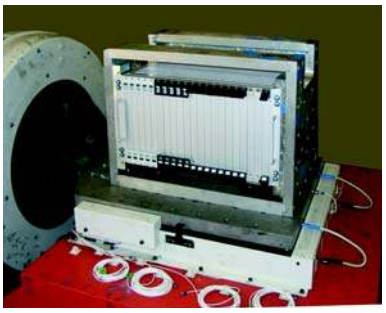

Y-axis_001a1

Shock and vibration resistant in all three axial directions

Standards/Approvals

- Internal and external dimensions in accordance with:
  IEC 60297-3-100, -101, - 102, -103, -104, -105,
  IEEE 1101.1, IEEE 1101.10/11
- Type of protection IP 20, in accordance with IEC 60529
- EMC testing to IEC 61587-3
- Shock and vibration test report;
  MIL 167, IEC 61587 DL 3,
  MIL 810 G, MIL 901 D

Note

- Other finishes e.g. yellow chromated on request
- Subrack with telescopic slides can be adapted for cabinet mounting on request

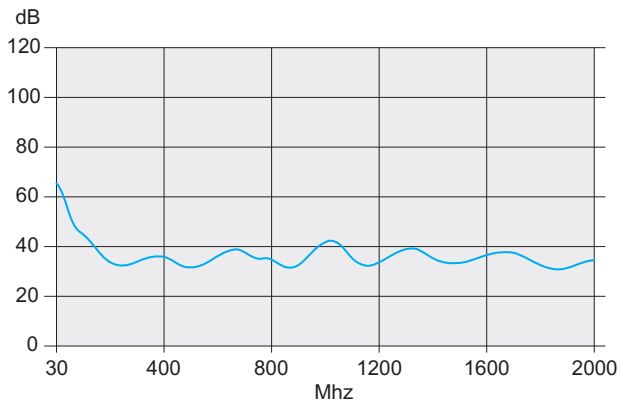

06108081

EMC curve

Subracks – EuropacPRO Rugged

OVERVIEW

19" SUBRACKS

- **Shock and vibration resistant up to 25 g**
- **Kits or individually configured subracks**
- **A product and accessory platform for the most different customers' requirements and applications**
- **Suitable for CompactPCI and VMEbus insertion and extractor handles**
- **EMC shielding can easily be retrofitted**
- **3D PDF or CAD 3D data available for download**



06112017

Kits

- All required parts are available under one part number, even partly assembled
- Most popular versions and dimensions available from stock
- For installed loads up to 25 kg
- Supplied as a space-saving flat pack

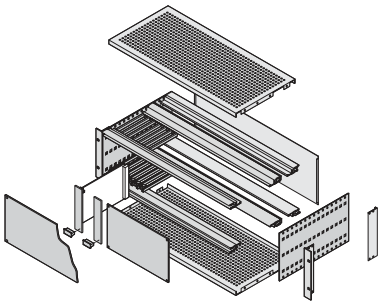

06105058

ServicePLUS individual configuration

- Single parts may individually be configured, respectively assembled on request (from quantity 1)
- Wide range of variants in heigth, width and depth
- Guide rails for different applications
- EMC shielding material to improve EMC performance
- Other accessories and assembly kits

ServicePLUS

e.g. modification (cut-outs)
e.g. downloads (CAD drawings, user manuals, test reports)
e.g. custom solutions (special depths, electromagnetically shielded applications)

Overview 6.92
Introduction 6.4
Kits 6.94
Individual configuration . . . 6.97
ServicePLUS 6.95
Application examples 6.71
europacPRO 6.6
Subracks for mobile railway applications 6.70
europacPRO for industrial applications 6.86

KIT, RUGGED, SHIELDED, FOR BACKPLANE MOUNTING



06112017

Illustration shows 3 U subrack

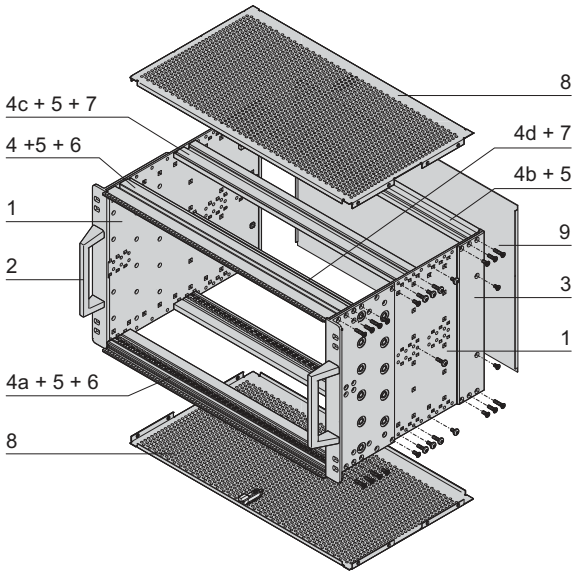

06112055

6 U

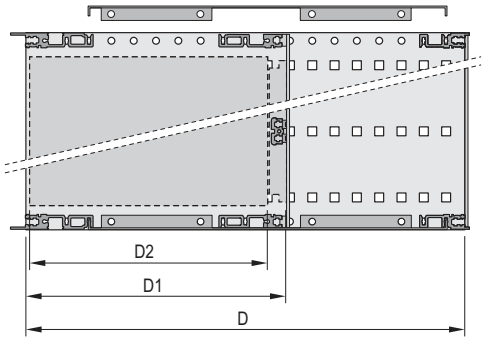

06112054

D = overall depth, D1 = insertion depth,
D2 = board depth = D1 - 15 mm



04400001

Rear horizontal rail for backplane mounting with insulation strip

- Subrack with robust side panel and horizontal rail, type R "rugged"
- Rear horizontal rail for backplane mounting with insulation strip
- Shielding typically 40 dB at 1 GHz, 30 dB at 2 GHz (as per VG 95373, part 15), on condition that the front is closed with sealed front panels
- Shock and vibration resistant to 25 *g*

DELIVERY COMPRISES (Kit)

Item	Qty 3 U	Qty 6 U	Description
1	2	2	Side panel type R, Al, 3 mm, clear passivated, with 19" support bracket 3.5 mm (tox-cold welded); for EMC gasketing (textile)
2	2	2	Front handle incl. fixing material kit
3	2	2	Rear corner profile for EMC gasketing (textile)
4	1	-	Front horizontal rail (R-KD)
4a	1	2	Front horizontal rail (R-LD)
4b	2	2	Rear horizontal rail (H-KD)
4c	2	2	Rear horizontal rail, centre (R-ST)
4d	-	1	Rear horizontal rail, centre (ST)
5	6	8	Threaded insert (pre-fitted)
6	2	2	Perforated strip (pre-fitted)
7	2	4	Insulation strip (pre-fitted)
8	2	2	EMC cover plate, rugged, with top cover locking
9	1	1	EMC rear panel
10	1	1	EMC gasketing material, fixing material kit, user manual

ORDER INFORMATION

Height U	Width HP	Depth D mm	Depth D1 mm	Part no.
3	84	295	175	**24567-149**
6	84	295	175	**24567-449**
Accessories				
Guide rails, accessories, 160 mm deep PC, UL 94 V-0, red, groove width 2 mm, PU 10 pieces				**24568-361**
Torx panhead screw 2.5 x 9.3, zinc-plated, PU 100 pieces; torque max. 0.2 Nm				**24560-141**
ESD clip for guide rails PU 50 pieces				**24560-255**
Guide rail accessories for heavy PCBs, extra strong Al extrusion, groove width 2 mm, 160 mm deep, 1 piece (SPQ 10)				**34562-881**
Torx pan head screw 2.5 x 7.3, zinc flake coating, black, 100 pieces; torque max. 0.2 Nm				**24560-157**
Adaptor to accomodate conduction cooled assemblies (CCA) for VPX applications, 160 mm deep, PU 1 pair; includes fixing material kit				24566-004
Adaptor to accomodate conduction cooled assemblies (CCA) for CompactPCI applications, 160 mm deep, PU 1 pair; includes fixing material kit				24566-005
19" dual fixing materials kit suitable for a subrack with double fixing holes (bolts, washers and nuts), PU 1 kit				**24566-109**

NOTE

- Test reports online
- For further accessories see from page 6.19

Subracks – EuropacPRO Rugged

OVERVIEW OF INDIVIDUAL COMPONENTS FOR SHIELDED OR UNSHIELDED SUBRACKS

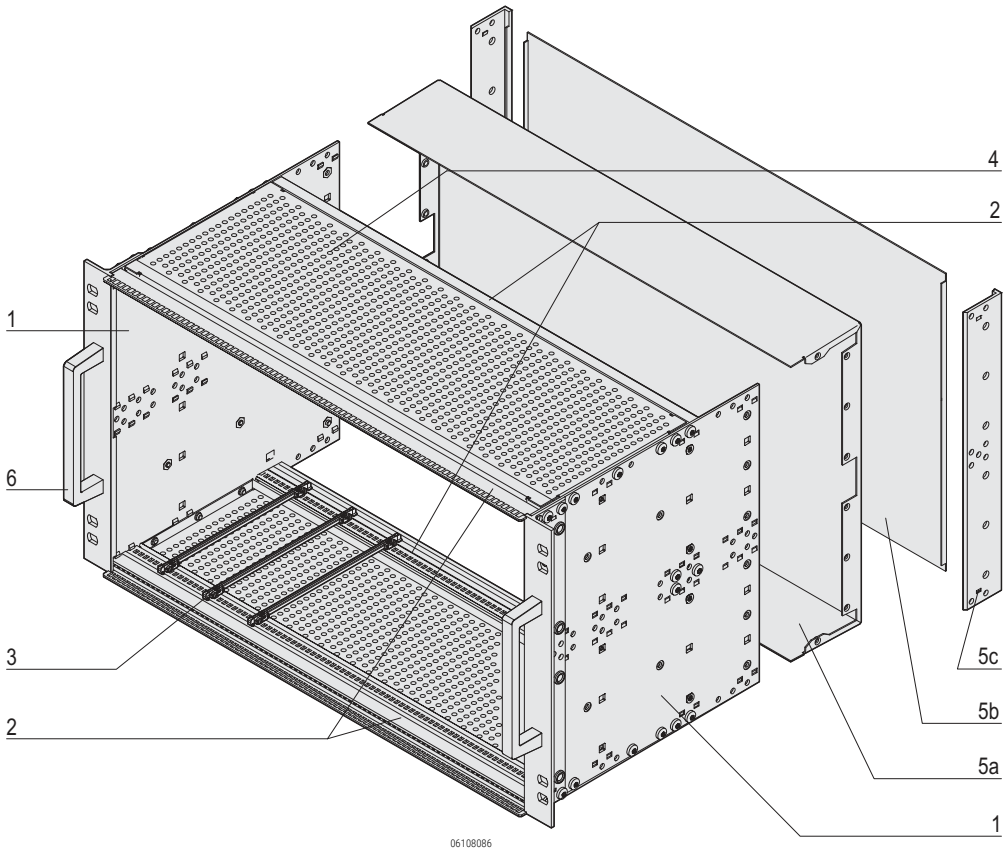

Item	Description	Description	page
Item 1	Side panels	Establish the height and depth of the subrack; Al, 3 mm, with universal hole positions for mounting of accessories	6.97
Item 2	Horizontal rails	Establish the width of the subrack; Al extrusion, with defined hole positions for guide rails, grooves for threaded inserts, M4 thread at front, functional rail shapes, basically differing with regard to their mechanical loading capacity: rugged loading up to 15 kg	6.98
Item 3	Guide rails	Guide rails act as interface between subracks and boards, for different board formats, are available in plastic or metal, optionally codable and optionally can be fitted with ESD clip to allow electrostatic discharge	6.105
Item 4	Cover plates	Provide mechanical protection and/or EMC shielding and are perforated	6.108
Item 5	Rear/front	Rear hood (5a) or front panel (5b) with corner profile (5c) as support for EMC shielding gaskets used in conjunction with shielded front panels; Note: rear hood and corner profile cannot be fitted simultaneously	6.49
Item 6	Handles	Handles can be mounted on the 19" brackets	6.97
–	EMC shielding (without illustration)	Extensive component range for specific shielding	6.110
–	Internal mounting (without illustration)	Universal assemblies, e.g. for horizontal and vertical mounting and for mounting plates	6.109 6.60

Subracks – EuropacPRO Rugged

SIDE PANEL TYPE R, EMC SEALING, CORNER PROFILE, FRONT HANDLE

ORDER INFORMATION

	Side panel type R for textile gasket	EMC textile gasket		Corner profile, rugged	Front handle
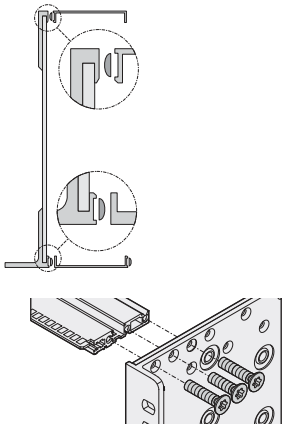 06112054 06112056	 108230769 Side panel, Al 3 mm, tox-cold welded with 19" Al bracket, 3.5 mm with handle hole, clear passivated, front anodised; please order front handles separately	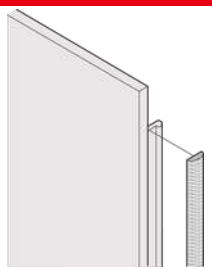 107887390 Textile gasket, core: foam, sleeve textile claddingwith CuNi coating, UL 94 V-0, **temperature range**		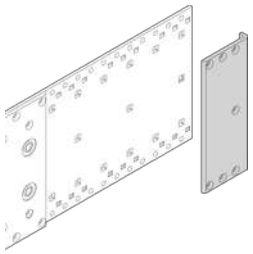 11043486 Al extrusion, 3 mm,finish clear passivated; with lateral grooves for EMC stainless steel gasket; rear hood cannot be used simultaneously	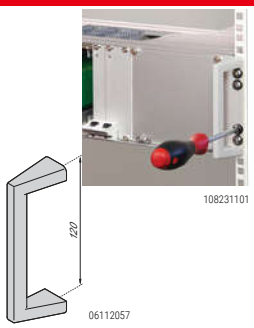 108231101 06112057 Die-cast Al profile, powder-coated, RAL 9006; load-carrying capacity 30 kg, fixing material kit with Screw safety lacquer
Height U	Depth mm		-40°C to +70 °C	-40°C to +85 °C	PU 1 pair	PU 1 kit
3	175	24568-145	**21101-853**	**21102-853**	24566-199	24566-010
3	235	24568-147				
3	275	24568-143				
3	277.75	24568-144				
3	295	24568-149				
3	355	24568-151				
6	175	24568-445	**21101-855**	**21102-855**	24566-499	24566-010
6	235	24568-447				
6	275	24568-443				
6	277.75	24568-444				
6	295	24568-449				
6	355	24568-451				
CompactPCI Corner profile						
3	275	24568-143	**21101-853**	**21102-853**	24566-197	24566-010
6	275	24568-443	**21101-855**	**21102-855**	24566-497	

Fixing material kits see page 6.103

EMC gasket stainless steel

- Easy mounting by clipping the gasket onto the right front panel bracket
- Temperature Range: -200 bis +160°C

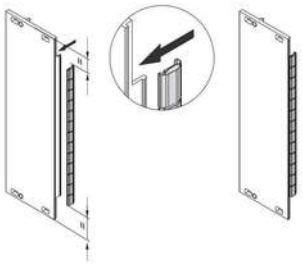

1 kit, EMC stainless steel gasket, for U-shaped front panel, 3U, 10x	**21102-105**
1 kit, EMC stainless steel gasket, for U-shaped front panel, 3U,100x	**21102-106**
1 kit, EMC stainless steel gasket, for U-shaped front panel, 6U, 10x	**21102-107**
1 kit, EMC stainless steel gasket, for U-shaped front panel, 6U,100x	**21102-108**

SIDE PANEL, TYPE R

- For high mechanical demands up to 25 *g* (vibration resistance, shock and vibration requirements to e.g. IEC 61587-DL 3)
- 19" bracket is fixed firmly to side panel (tox-cold welded)
- Height 3 U and 6 U
- Depths 175, 235, 275, 277.75, 295 and 355 mm
- EMC shielding concept for front/rear with EMC textile gasket
- Other dimensions on request

Part number in bold face type: ready for despatch within 2 working days
Part number in normal type: ready for despatch within 10 working days

MOUNTING POSITION OF HORIZONTAL RAIL/CENTRAL RAILS

3 U (board depth 160, 220, 280 mm)

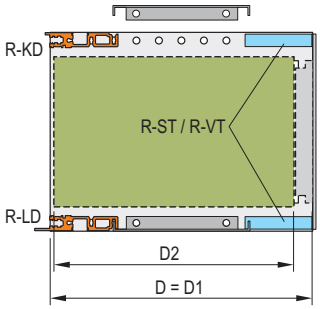

06112061

6 U (board depth 160, 220, 280 mm)

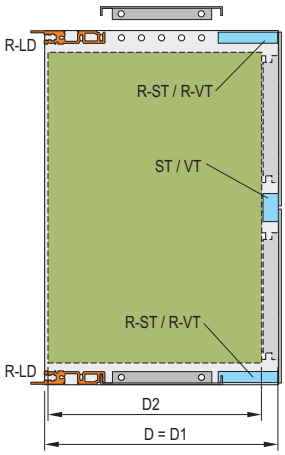

06112062

3 U (board depth 160, 220, 280 mm)

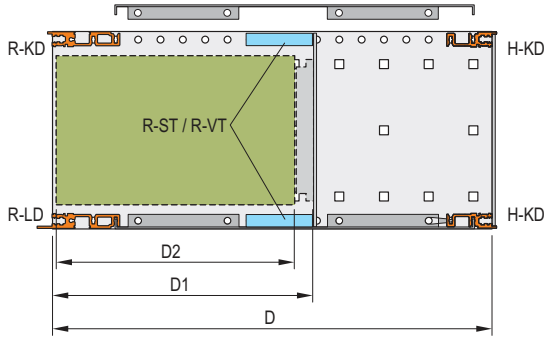

06112063

6 U (board depth 160, 220, 280 mm)

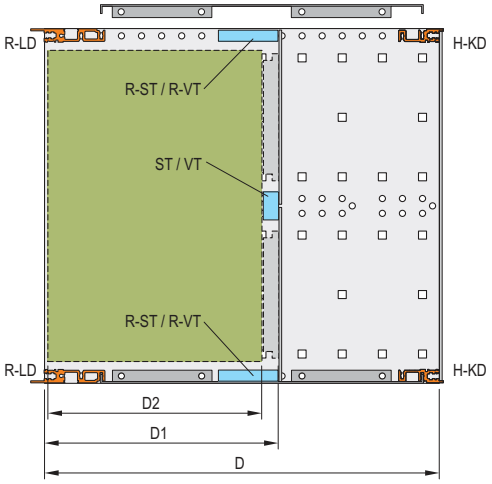

06112064

3 U (for CompactPCI/VME64x applications)

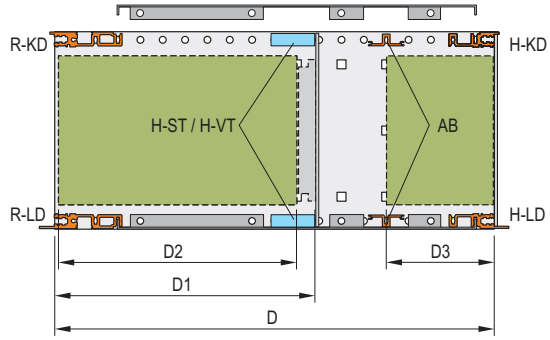

06112065

6 U (for CompactPCI/VME64x applications)

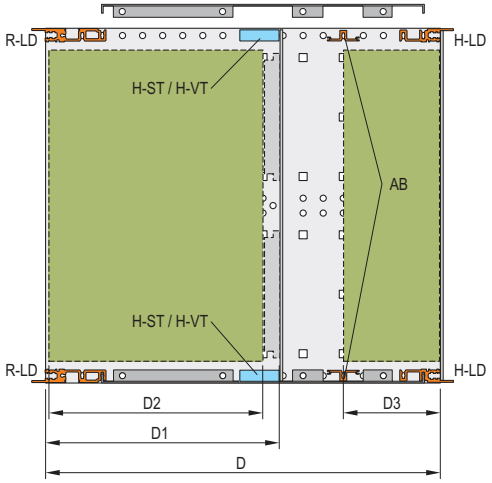

06112066

Horizontal rails

R-ST

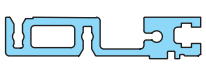

06112070

R-VT



06112071

H-ST



06112072

H-VT

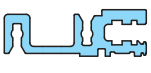

06112073

ST



06112074

VT



06112075

Subracks – EuropacPRO Rugged

FRONT HORIZONTAL RAILS

ORDER INFORMATION

		With long lip for insertion/ extraction of CompactPCI and VME64x boards	With long lip for insertion/ extraction of CompactPCI and VME64x boards	With short lip	With short lip
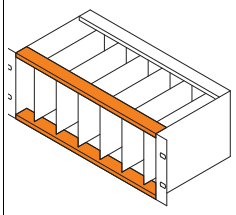 bza44980		"rugged" Type R-LD long lip  06112004	"heavy" Type H-LD long lip  06197009	"rugged" Type R-KD short lip  06112013	"heavy" Type H-KD short lip  06197008
With HP markings from 28 HP, Al extrusion, anodised finish, conductive contact surface		Al extrusion, anodised finish, conductive contact surface, with HP markings	Al extrusion, anodised finish, conductive contact surface, with HP markings	Al extrusion, anodised finish, conductive contact surface, with HP markings	Al extrusion, anodised finish, conductive contact surface, with HP markings
Usable length HP	Length mm	1 piece (SPQ 10)[1]	1 piece (SPQ 10)[1]	1 piece (SPQ 10)[1]	1 piece (SPQ 10)[1]
20	106.68	34566-320	**34560-320**	34566-220	**34560-220**
28	147.32	34566-328	**34560-328**	34566-228	**34560-228**
40	208.28	34566-340	**34560-340**	34566-240	**34560-240**
42	218.44	34566-342	**34560-342**	34566-242	**34560-242**
63	325.12	34566-363	**34560-363**	34566-263	**34560-263**
84	431.80	34566-384	**34560-384**	34566-284	**34560-284**
–	1000	34566-301	**34560-301**	34566-201	**34560-201**
Cover strips to cover the horizontal rail perforations Al, untreated, 0.8 mm, length 431.5 mm, 1 piece (SPQ 10) 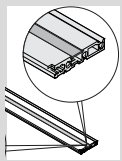		**34566-184**	–	**34566-184**	–
Threaded inserts see page		6.104	6.104	6.104	6.104
Fixing material kits see page		6.103	6.103	6.103	6.103

1) SPQ (standard pack quantity): Part number includes 1 piece, but delivery is exclusively made in standard pack quantity (SPQ); please order at least the SPQ quantity or a multiple
"heavy" load > 7.5 kg; "rugged" load > 15 kg;

NOTE

- 1000 mm version without M4 thread to front, without printing and without notch for 19"-bracket
- EMC gasket see page 6.56
- For further horizontal rails see page 6.29

Part number in bold face type: ready for despatch within 2 working days
Part number in normal type: ready for despatch within 10 working days

Subracks – EuropacPRO Rugged

REAR HORIZONTAL RAILS

ORDER INFORMATION

		For indirect backplane fixing with insulation strip		For direct backplane fixing		For direct fixing of connectors in accordance with EN 60603-2 (DIN 41612)
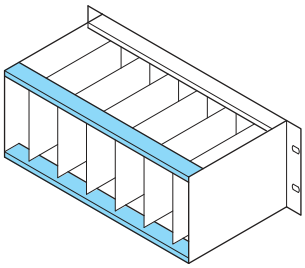 06105074		 04400001		 04400002		 04400003
		"rugged" Type R-ST Standard	"heavy" Type H-ST standard	"rugged" Type R-VT recessed installation	"heavy" Type H-VT recessed installation	"heavy" Type H-MZ with Z-rail
		 06112005	 06197011	 06112006	 06197013	 06197015
With HP markings from 28 HP, Al extrusion, anodised finish, conductive contact surface		Al extrusion, anodised finish, conductive contact surface, with HP markings	Al extrusion, anodised finish, conductive contact surface, with HP markings	Al extrusion, anodised finish, conductive contact surface, with HP markings	Al extrusion, anodised finish, conductive contact surface, with HP markings	Al extrusion, anodised finish, conductive contact surface, with HP markings
Usable length HP	Length mm	1 piece (SPQ 10)[1]	1 piece (SPQ 10)[1]	1 piece (SPQ 10)[1]	1 piece (SPQ 10)[1]	1 piece (SPQ 10)[1]
20	106.68	34566-520	**34560-520**	34566-720	**34560-720**	**34560-920**
28	147.32	34566-528	**34560-528**	34566-728	**34560-728**	**34560-928**
40	208.28	34566-540	**34560-540**	34566-740	**34560-740**	**34560-940**
42	218.44	34566-542	**34560-542**	34566-742	**34560-742**	**34560-942**
63	325.12	34566-563	**34560-563**	34566-763	**34560-763**	**34560-963**
84	431.80	34566-584	**34560-584**	34566-784	**34560-784**	**34560-984**
–	1000	34566-501	**34560-501**	34566-701	**34560-701**	–
Insulation strips see page		6.104	6.104	–	–	–
Threaded inserts see page		6.104	6.104	6.104	6.104	6.104
Fixing material kits see page		6.103	6.103	6.103	6.103	6.103

1) SPQ (standard pack quantity): Part number includes 1 piece, but delivery is exclusively made in standard pack quantity (SPQ); please order at least the SPQ quantity or a multiple
"heavy" load > 7.5 kg; "rugged" load > 15 kg;

NOTE

- 1000 mm version without M4 thread to front, without printing and without notch for 19"-bracket
- EMC gasket see page 6.56
- For further horizontal rails see page 6.29

Subracks – EuropacPRO Rugged

REAR HORIZONTAL RAILS, CENTRE, FOR 6 U

ORDER INFORMATION

		For indirect backplane fixing with insulation strip	For direct backplane fixing	For direct fixing of connectors in accordance with EN 60603-2 (DIN 41612
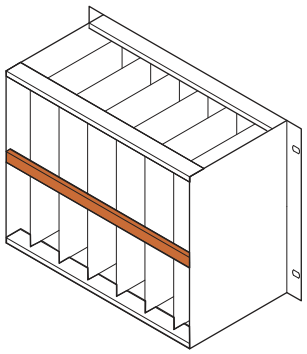 06108090		 04400001	 04400002	 04400003
		Type ST	Type VT	Type MZ
		 06197016	 06197017	 06197018
		Al extrusion, finish anodised, conductive contact surface; without markings	Al extrusion, finish anodised, conductive contact surface; without markings	Al extrusion, finish anodised, conductive contact surface; without markings
Usable length HP	Length mm	1 piece (SPQ 10)[1)]	1 piece (SPQ 10)[1)]	1 piece (SPQ 10)[1)]
20	106.68	**34561-020**	**34561-120**	**34561-220**
28	147.32	**34561-028**	**34561-128**	**34561-228**
40	208.28	**34561-040**	**34561-140**	**34561-240**
42	218.44	**34561-042**	**34561-142**	**34561-242**
63	325.12	**34561-063**	**34561-163**	**34561-263**
84	431.80	**34561-084**	**34561-184**	**34561-284**
–	1000	**34561-001**	**34561-101**	**34561-201**
Insulation strips see page		6.104	–	–
Threaded inserts see page		6.104	6.104	6.104
Fixing material kits see page		6.103	6.103	6.103

1) SPQ (standard pack quantity): Part number includes 1 piece, but delivery is exclusively made in standard pack quantity (SPQ); please order at least the SPQ quantity or a multiple
"heavy" load > 7.5 kg; "rugged" load > 15 kg;

NOTE

- All horizontal rails without printed markings
- 1000 mm version without M4 thread to front

Part number in bold face type: ready for despatch within 2 working days
Part number in normal type: ready for despatch within 10 working days

Subracks – EuropacPRO Rugged

HORIZONTAL RAILS (TYPE AB) FOR REAR I/O APPLICATIONS

ORDER INFORMATION

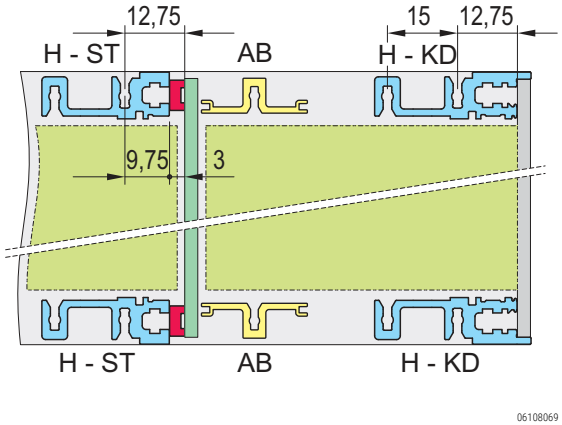

06108069

	For CompactPCI in rear I/O area	For CompactPCI in rear I/O area with notch
	 06108009	
	Type AB	Typ AB, with notch
	 06197019	
	Al extrusion, finish anodised, conductive contact surface; horizontal rail type AB (AB = support) is required to fix the guide rails for the 80 mm rear I/O boards; without markings	Al extrusion, finish anodised, conductive contact surface; horizontal rail type AB (AB = support) is required to fix the guide rails for the 80 mm rear I/O boards; without markings

Usable length HP	Length mm	1 piece (SPQ 10)[1]	1 piece (SPQ 10)[1]
20	106.68	**34561-520**	
28	147.32	**34561-528**	
40	208.28	**34561-540**	
42	218.44	**34561-542**	**34579-042**
63	325.12	**34561-563**	
84	431.80	**34561-584**	**34579-040**
–	1000	**34561-501**	
Fixing material kits see page		6.103	6.103

1) SPQ (standard pack quantity): Part number includes 1 piece, but delivery is exclusively made in standard pack quantity (SPQ); please order at least the SPQ quantity or a multiple
"heavy" load > 7.5 kg; "rugged" load > 15 kg;

NOTE

- All horizontal rails without printed markings
- 1000 mm version without M4 thread in end

Subracks – EuropacPRO Rugged

SCREWS OVERVIEW

	Description	Material	Dimension	Qty/PU	Part no.
 137813741	Countersunk screw, with thread locking compound **Application:** Rugged side panel to horizontal rail; for area of tox-cold welded brackets and corner profiles except when guide rail is fitted to slot 1	Stainless steel	M4 x 18	100	24566-100
 137813739	Countersunk screw, with thread locking compound **Application:** Rugged side panel to horizontal rail; for area of tox-cold welded brackets and corner profiles if guide rail is fitted to slot 1	Stainless steel	M4 x 14	100	24566-101
 137813734	Panhead screw, with thread locking compound **Application:** Rugged side panel to horizontal rail; not for area of tox-cold welded brackets and corner profiles except when guide rail is fitted to slot 1	Stainless steel	M4 x 14	100	24566-102
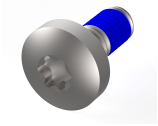 137813736	Panhead screw, with thread locking compound **Application:** Rugged side panel to horizontal rail; not for area of tox-cold welded brackets and corner profiles if guide rail is fitted to slot 1	Stainless steel	M4 x 10	100	24566-103
 137813737	Panhead screw, with thread locking compound **Application:** Rugged side panel to cover plate, not for area of tox-cold welded brackets and corner profiles	Stainless steel	M4 x 8	100	24566-104
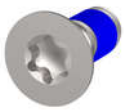 137813742	Torx countersunk screw , with thread locking compound **Application: :** Rugged side panel to cover plate, for area of tox-cold welded brackets and corner profiles	Stainless steel	M4 x 10	100	24566-106
 137813740	Torx countersunk screw, with thread locking compound **Application:** Rugged side panel to corner profile; in EMC-shielded subracks and to increase robustness	Stainless steel	M4 x 7	100	24566-105
 137813738	Square nut **Application:** Rugged side panel to corner profile; in EMC-shielded subracks and to increase robustness	Zinc-plated steel	M4	100	**24560-140**

19" Dual fixing material kit, page 6.104 **24566-109**

NOTE

- Stainless steel screws; with organic surface layer (silver)

Subracks – EuropacPRO Rugged

THREADED INSERTS, PERFORATED STRIPS, INSULATION STRIPS

ORDER INFORMATION

	Threaded insert		Perforated strip	Insulation strip
	M2.5	M3	Item 1	
	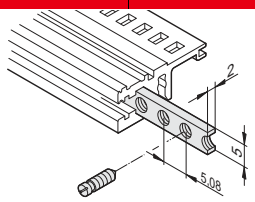		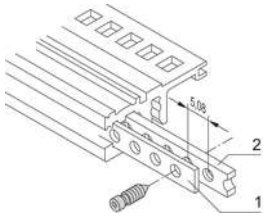	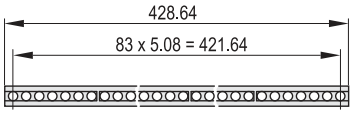
	required for fixing the front panel to the horizontal rail; St, zinc-plated; use collar screw 12.3 mm, see page 6.66		for centring shielded plug-in units, Al, 1 mm, please order grub screw separately	for insulated mounting of backplane; PC, UL 94 V-0, grey

Usable length HP	Threaded insert Length mm	1 piece (SPQ 10)[1]	1 piece (SPQ 10)[1]	Perforated strip Length mm	1 piece (SPQ 10)[1]	Insulation strip Length mm	PU 10 pieces
20	106.18	**34561-320**	–	106.48	**30845-189**	101.50	**24560-820**
28	146.82	**34561-328**	–	147.12	**30845-197**	144.20	**24560-828**
40	207.78	**34561-340**	–	208.08	**30845-209**	205.12	**24560-840**
42	217.94	**34561-342**	–	218.24	**30845-211**	210.40	**24560-842**
63	324.62	**34561-363**	–	324.92	**30845-232**	316.88	**24560-863**
84	431.30	**34561-384**	**34561-484**	431.60	**30845-253**	428.64	**24560-884**
196	1000.26	**34565-196**	–	1000.26	**34565-396**		–

Accessories

Grub screw M2.5 x 8, PU 100 pieces	**21100-276**	–	–	–	–	–
Grub screw M2.5 x 9, Torx 8, PU 100 pieces	–	–	–	**21102-980**	–	–
Grub screw M3 x 8, PU 100 pieces	–	**21100-646**	–	–	–	–

1) SPQ (standard pack quantity): Part number includes 1 piece, but delivery is exclusively made in standard pack quantity (SPQ); please order at least the SPQ quantity or a multiple

Part no. includes one packing unit (PU); delivery is exclusively made in PU

19" DUAL FIXING MATERIALS KIT

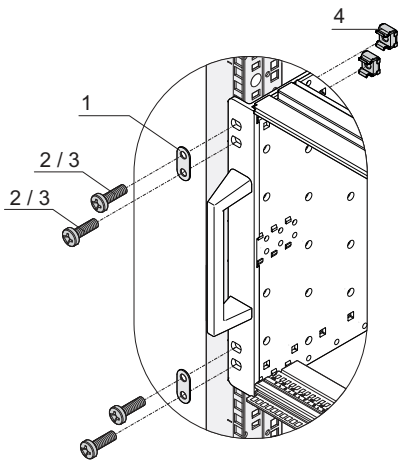

06113052

- For fixing a subrack with dual fixing holes to 19" mounting brackets (e.g. rugged and railroad subracks)

DELIVERY COMPRISES

Item	Qty	Description
1	4	Double washer, stainless steel
2	8	M6 x 16 (Torx 30 drive) + Nomel washer
3	8	M6 x 16 (Pozidrive) + Nomel washer
4	8	Cage nut KM6
1	4	User manual

ORDER INFORMATION

Description	Part no.
19" dual fixing materials kit	**24566-109**

ADAPTOR TO ACCOMMODATE CONDUCTION COOLED ASSEMBLIES (CCA)

ORDER INFORMATION

	Adaptor to accomodate conduction cooled assemblies (CCA) in subracks	
	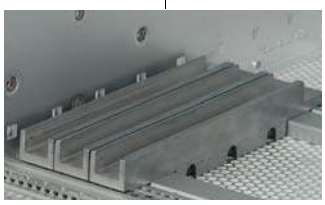 06112022 Al die-cast, silver, can be screw-fixed, 0.8" pitch; suitable for heavy and rugged horizontal rails, incl. fixing material kit	
Board length mm	VPX PU 1 pair	CompactPCI PU 1 pair
160	24566-004	24566-005

2) Part no. includes one packing unit (PU); delivery is exclusively made in PU

GUIDE RAILS FOR PLUG-IN UNITS AND FRAME TYPE PLUG-IN UNITS, ONE-PIECE, GROOVE WIDTH 2 MM AND 2.5 MM

ORDER INFORMATION

			For plug-in units and frame type plug-in units "Standard"	
Assembly Plastic guide rail - can be clipped into Al extruded horizontal rails - can be clipped into 1.5 mm thick plates **Storage temperature** from -40 °C ... 130 °C			 136815561 up to 220 mm length, PC, UL 94 V-0; from 280 mm length, multi-piece, end piece PC, UL 94 V-0, central section Al extrusion	PC, UL 94 V-0
Board length mm	Groove width mm	Colour mm	PU 10 pieces[2)]	1 piece (SPQ 50)[1)]
70	2	red	–	**34568-230**
70	2	grey	–	–
160	2	red	**24568-361**	**64568-001**
220	2	red	**24568-362**	**64568-002**
280	2	red	**24568-379**	–
340	2	red	**24568-380**	–
160	2.5	red	–	**64568-096**
220	2.5	red	–	**64568-098**

Accessories

Retention screw, PU 100 pieces; Torque max. 0.2 Nm	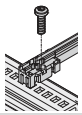	**24560-141**	**24560-141**
ESD clip, PU 50 pieces		**24560-255**	**24560-255**

1) SPQ (standard pack quantity): Part number includes 1 piece, but delivery is exclusively made in standard pack quantity (SPQ); please order at least the SPQ quantity or a multiple

2) Part no. includes one packing unit (PU); delivery is exclusively made in PU

Description of accessories see from page 6.107

GUIDE RAILS TYPE "ACCESSORY", ONE-PIECE, GROOVE WIDTH 2 MM AND 2.5 MM

ORDER INFORMATION

	Guide railsType **Accessory**	Guide railsType **Accessory** strengthened	for heavy modules, Al extrusion, silver, robust version
Assembly - can be clipped into Al extruded horizontal rails - can be clipped into 1.5 mm thick plates **Storage temperature** from -40 °C ... +130 °C **Colors of Plastic Material** red: RAL 3000 grey: RAL 7016	 up to 280 mm length, PC, UL 94 V-0; > 280 mm length, multi-piece, end piece PC, UL 94 V-0, middle section Al extrusion	 PC, UL 94 V-0, red; support beam of guide rails adds to strengthening	 06102005 Al extrusion; is screwed to horizontal rail "heavy" with retention screws

Board length mm	Groove width mm	Colour	PU 10 pieces[2]	1 piece (SPQ 50)	PU 10 pairs[2]	1 piece (SPQ 50)	1 piece (SPQ 10)[1]
100	2	red	–	**64568-082**	–		–
160	2	red	**24568-363**	**64568-005**	**64568-076**		–
160	2	grey/silver	–	**64568-055**	–		**34562-881**
220	2	red	**24568-364**	**64568-006**	**64568-078**		–
220	2	grey/silver	–	**64568-166**	–		**34562-882**
280	2	red/silver	**24568-381**	–	**64568-080**		**34562-883**
340	2	red/silver	**24568-382**	–	–		**34562-884**
400	2	red/silver	–	–	–		**34562-885**
160	2.5	red/silver	–	**64568-100**	**64568-118**		**34564-881**
220	2.5	red/silver	–	**64568-102**	**64568-119**		**34564-882**
280	2.5	red/silver	–	–	**64568-120**		**34564-883**
340	2.5	silver	–	–	–		**34564-884**
400	2.5	silver	–	–	–		**34564-885**

Accessories

Retention screw, PU 100 pieces; torque max. 0.2 Nm 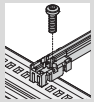	**24560-141** 	**24560-141** 	**24560-141** 	**24560-157**
ESD clip, PU 50 pieces	**24560-255**	**24560-255**	**24560-255**	–
Board locking C, red, PU 10 pieces	**24560-377**	**24560-377**	**24560-377**	–
Board handle C, red, PU 10 pieces	**24560-378**	**24560-378**	**24560-378**	–
Identification strips for board handle, red, PU 1 sheet = 438 pieces	**60817-228**	**60817-228**	**60817-228**	–
Coding see page	6.43			–

1) SPQ (standard pack quantity): Part number includes 1 piece, but delivery is exclusively made in standard pack quantity (SPQ); please order at least the SPQ quantity or a multiple

2) Part no. includes one packing unit (PU); delivery is exclusively made in PU

Description of accessories see from page 6.43

Part number in bold face type: ready for despatch within 2 working days
Part number in normal type: ready for despatch within 10 working days

GUIDE RAILS FOR HEAVY ASSEMBLIES, COMPACTPCI, VME64X

ORDER INFORMATION

	For CompactPCI, VME64x with coding		For heavy modules, Al extrusion, silver, robust version
	In accordance with IEEE 1101.10 and IEC 60297-3-103	Offset 0.1" for power supply units in accordance with IEEE 1101.10 and IEC 60297-3-103	
Assembly - can be clipped into Al extruded horizontal rails - can be clipped into1.5 mm thick plates **Storage temperature** from -40 °C ... 130 °C	 124624426 **One-piece** for groove width 2 mm, PC, UL 94 V-0; **Multi-piece** for groove width 2.5 mm, end piece PC, UL 94 V-0, middle section Al extrusion	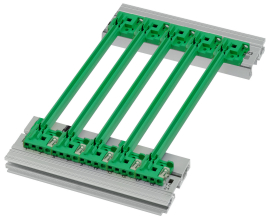 124675998 **One-piece** for groove width 2 mm, PC, UL 94 V-0; For installation of power supplies in CompactPCI systems or plug-in units with SMD placement	 107888345 Al extrusion; is screwed to horizontal rail "heavy" with retention screws
Board length mm	Groove width mm	Colour mm	PU 10 pieces. [2]	PU 10 pieces. [2]	1 piece (SPQ 10)[1]
70	2	red	**24568-357**	–	–
70	2	grey	**24568-360**	–	–
160	2	red	**24568-356**	–	–
160	2	grey	**24568-358**	–	**34562-881**
160	2	green	–	**24568-359**	–
220	2	grey	–	–	**34562-882**
220	2	green	–	–	**34562-883**
160	2.5	grey	–	–	**34564-881**
220	2.5	red	–	–	–
220	2.5	grey	–	–	**34564-882**
280	2.5	red	**24568-331**	–	–
280	2.5	grey	**24568-341**	–	**34564-883**

Accessories

ESD clips, PU 50 pieces	**24560-255**	–	–
ESD clips, for alignment pin, PU 50 pieces	**24560-256**	**24560-256**	–
Retention screw, PU 100 pcs.; torque max. 0.2 Nm	**24560-141**	**24560-141**	**24560-157**
Coding peg, PU 100 pieces	**20817-501**	**20817-501**	–

1) SPQ (standard pack quantity): Order number includes 1 piece, but delivery is exclusively made in standard pack quantity (SPQ); please order at least the SPQ quantity or a multiple thereof

2) Order number includes one packaging unit (PU); delivery is exclusively made in PU

Description of accessories see from page 6.107

GUIDE RAIL ACCESSORIES

ORDER INFORMATION

	ESD clips, CompactPCI/VME 64 alignment pin for guide rails	Coding for plug-in components Keying/coding for CompactPCI, VME64x handles to IEEE 1011.10 and IEC 60297-3-103
	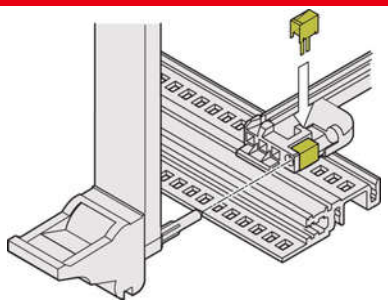 108230497 Spring steel, tin-plated, ESD clip, for alignment pin in accordance with IEEE; can be plugged into the guide rails with coding and into the keying/coding block; provides conductive contact between the guide pin of the inserter/extractor handle (IEL or IET handle) and the horizontal rail	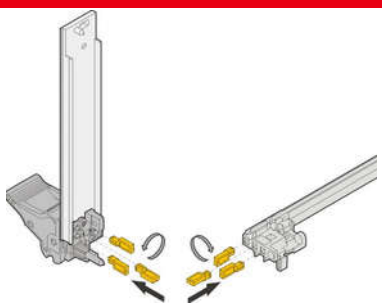 135276437 Keying/coding peg, PC, UL 94 V-0, RAL 7035:The keying/coding pegs prevent plug-in unitsto be mounted in wrong slots. They are inserted in the chambers of the codable card guides as well as in the insertion/extraction handlesIEL or IET (4 possible positions), resulting in 64 codings per card guide; when coding the upper and lower card guide, 4096 codings will result.
Assembly	. PU 50 pieces. [2].	
At the top/ at the bottom	**24560-256**	**20817-501**

2) Part no. includes one packing unit (PU); delivery is exclusively made in PU

GUIDE RAIL ACCESSORIES

ORDER INFORMATION

	ESD clip for guide rails
	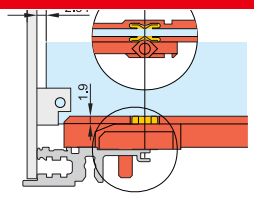 04503050 Spring steel, tin-plated, ensures conductive contact between board and horizontal rail, on both the solder side and the component side
Colour	silver
Assembly	PU 50 pieces
above/below	**24560-255**

Part number in bold face type: ready for shipping within 2 working days
Part number in normal type: ready for shipping within 10 working days

COVER PLATES FOR BOLTING TO RUGGED SIDE PANEL

ORDER INFORMATION

	Cover plate for bolting to side panel	Stainless steel EMC gasket, between cover plate and horizontal rail
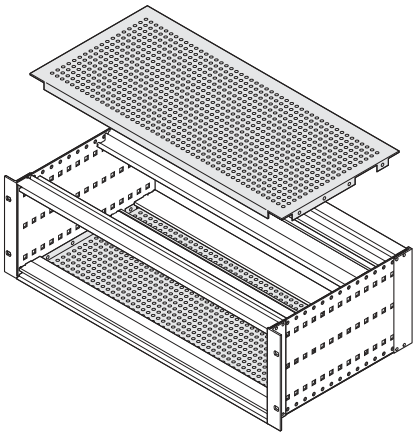 06197010	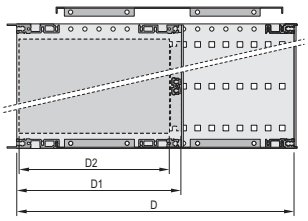 06112054 Perforated Al plate, 1.2 mm, hole diameter 4.0 mm, passivated, perforation ratio 58 %, incl. retention screws; 4 stainless steel EMC contact strips per subrack are required for shielding, please order separately	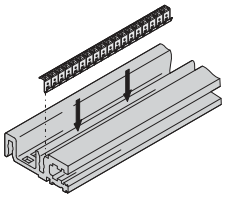 06106052 Stainless steel EMC gasket, clips into the horizontal rail and forms the contact with the cover plate; suitable for all horizontal rails

Width HP	Depth D mm	Application	PU 1 pair	PU 10 pieces	PU 100 pieces
84	175	160 mm board depth (D2)	24568-004		
84	235	220 mm board depth (D2)	24568-008		
84	295	280 mm board depth (D2)	24568-012		
84	275	160 mm board depth (D2) CompactPCI, 80 mm rear I/O	24568-032		
84	277.75	160 mm board depth (D2) VME, VME64, 80 mm rear I/O	24568-036	**24560-245**	**24560-246**
84	295	160 mm board depth (D2), approx. 120 mm clearance behind backplane	24568-016		
84	355	220 mm board depth (D2), approx. 120 mm clearance behind backplane	24568-020		

Accessories

Cover Plate Fixing Kit  108230785 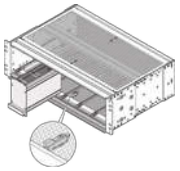 107888015 Cover plate latch, additional securing for rugged cover plate, PU 4 pieces	24566-007	–	–
Assembly tool, to fit EMC gasket, stainless steel, for horizontal rails, 1 piece 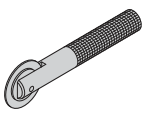	–	**24560-271**	**24560-271**

NOTE

- Cover plates without perforation available on request
- Mounting position of horizontal rails, see page 6.98

Subracks – EuropacPRO Rugged

COMBINED MOUNTING (6 U AND 2 X 3 U ONE ABOVE THE OTHER)

ORDER INFORMATION

	Rugged struts for combined mounting	Front panel for textile EMC gasket, 6 U, 2 HP . Item. 6.
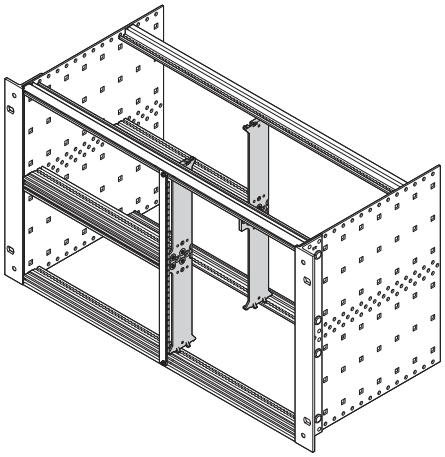 06112076	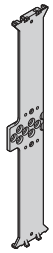 06112077 6 U, die-cast zinc; fixing material kit	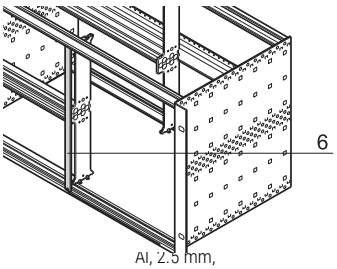 bpa46550 Al, 2.5 mm, U-profile with notch, 6 U, 2 HP
Height U	PU 2 pieces	1 piece (SPQ 5)[1)]
6	24566-400	**30849-140**

Accessories

Pozidrive/slotted collar screw M2.5 x 12.3, St, nickel-plated, PU 100 pieces	–	**21101-101**
Pozidrive/slotted collar screw M2.5, black, zinc-plated, PU 100 pieces	–	**21101-102**
Washer 2.7 x 5 x 1, PA 6, PU 100 pieces	–	**21101-121**
Textile gasket, core: foam, sleeve: textile cladding with CuNi coating, UL 94 V-0, PU 10 pieces	–	**21101-855**

NOTE

- Rugged horizontal rails in various lengths, see page 6.99

Part number in bold face type: ready for despatch within 2 working days
Part number in normal type: ready for despatch within 10 working days

Subracks – EuropacPRO Rugged

EMC GASKETS BETWEEN FRONT/REAR PANEL AND HORIZONTAL RAIL

ORDER INFORMATION

	Stainless steel EMC gasket between front panel/rear panel and horizontal rail	
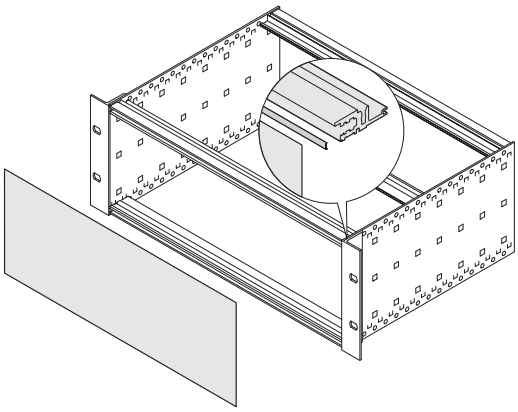 06102053	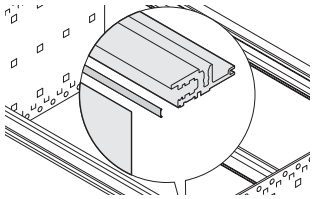 06102053 stainless steel; for front and rear horizontal rails (type VT)	
Width HP	Depth mm	PU 10 pieces	PU 100 pieces
28	131.8	**24560-229**	–
42	202.9	**24560-231**	–
63	304.5	**24560-233**	–
84	416.6	**24560-235**	**24560-236**

EMC GASKETS BETWEEN FRONT PANEL AND 19" BRACKET/CORNER PROFILE

ORDER INFORMATION

	Textile EMC gasket between front panel/rear panel and 19" bracket/corner profile	
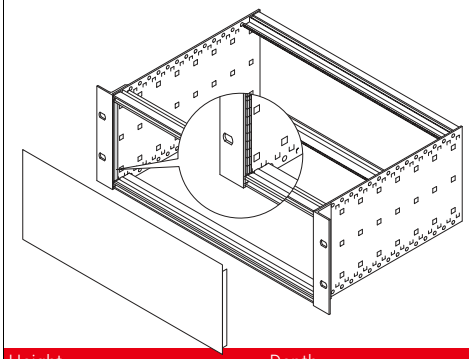 06105077	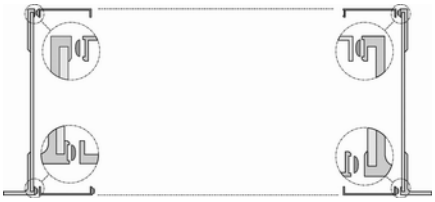 06108054 **Temperature. range -40°C to +70°C** **textile gasket,** core: foam, sleeve: textile cladding with CuNi coating,UL 94 V-0,	
Height U	Depth mm	PU 10 pieces	PU 100 pieces
3	97.5	**21101-853**	**21101-854**
6	232.5	**21101-855**	**21101-856**
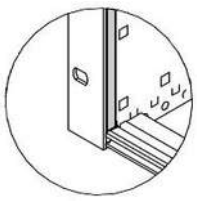 **Temperature. range -40°C to +85°C** **textile gasket**, core: foam, sleeve: textile cladding with CuNi coating,UL 94 V-0,		
Height U	Depth mm	PU 10 pieces	PU 100 pieces
3	97.5	**21102-853**	**21102-854**
6	232.5	**21102-855**	**21102-856**
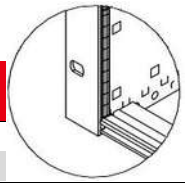 **Temperature. range -200°C to +160°C** **stainless steel gasket** Easy mounting by clipping the gasket onto the right front panel bracket		
Height U	Depth mm	PU 10 pieces	PU 100 pieces
3	97.5	**21102-105**	**21102-106**
6	232.5	**21102-107**	**21102-108**

EMC GASKET BETWEEN HORIZONTAL RAIL AND COVER PLATE

ORDER INFORMATION

		Stainless steel EMC gasket, between cover plate and horizontal rail	
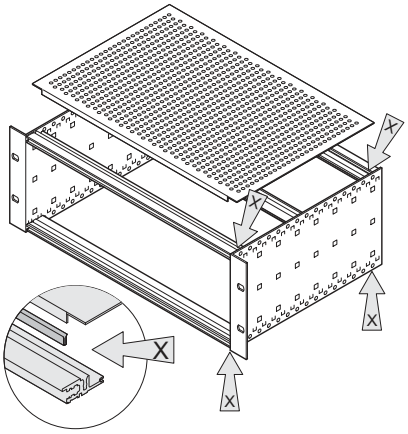 06102052		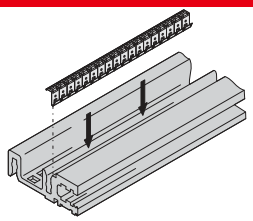 06106052 stainless steel EMC gasket, clips into the horizontal rail and forms the contact with the cover plate; suitable for all horizontal rails	
Width HP	Depth mm	PU 10 pieces	PU 100 pieces
42	202.9	**24560-241**	–
84	416.6	**24560-245**	**24560-246**
Assembly tool, to fit EMC gasket, stainless steel, for horizontal rails, 1 piece 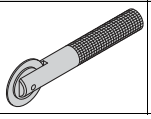		**24560-271**	**24560-271**

EMC GASKET BETWEEN BACKPLANE AND SIDE PANEL

ORDER INFORMATION

		Stainless steel EMC gasket between backplane and side panel (depth-offset installation)
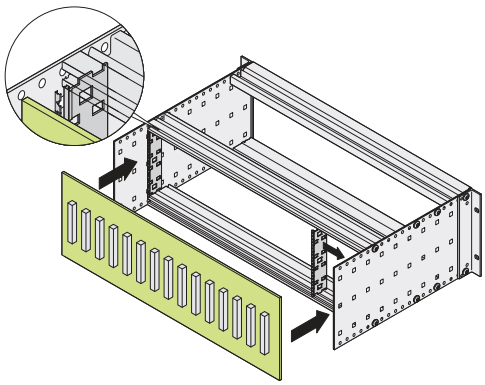 06108078		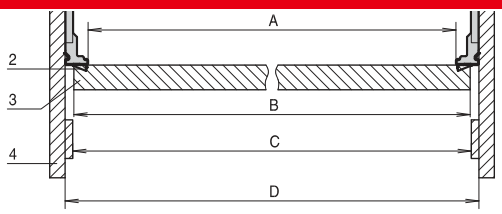 bpa45916 2 x support profile, Al extrusion, 2 x stainless steel EMC gasket; for vertical EMC shielding between depth-offset shielded backplane and side panel: dimensions for 84 HP A = 425.8 mm, B < 429.9 mm, C = 429.8 mm, D = 431.8 mm
Height U	Depth mm	PU 1 kit
3	97.5	**24561-199**
6	187.5	**24561-499**
Torx countersunk screw M4 x 7, St, zinc-plated, PU 100 pieces		24566-105
Square nut M4, St, zinc-plated, PU 100 piece		**24560-140**

With appropriate design, the backplane can be used as shielded rear wall of the rack; in this case a rear horizontal rail (L-type VT or H-VT) must be used for deeper installation to ensure the horizontal contact.

For vertical contact the support profile can be fixed in the standard way to the europacPRO side panel (depth grid 30 mm

Part number in bold face type: ready for despatch within 2 working days
Part number in normal type: ready for despatch within 10 working days

Subracks – EuropacPRO

PLATFORM-BASED STANDARD SOLUTIONS FOR INDIVIDUAL REQUIREMENTS

Practical technology without time-consuming assembly. The modular europacPRO product platform allows a wide range of possible applications with only a few components. The intelligent design of all components results in remarkably simple and fast management in assembly and components.

Two ways of reaching your desired product:

- Kits
- Individual configuration

Simple assembly with europacPRO kits:



06107001

Delivered in space-saving flat packs. The threaded inserts or EMC gasket (depending on selected kit) are already pre-mounted on the horizontal rail.

Individual configuration:

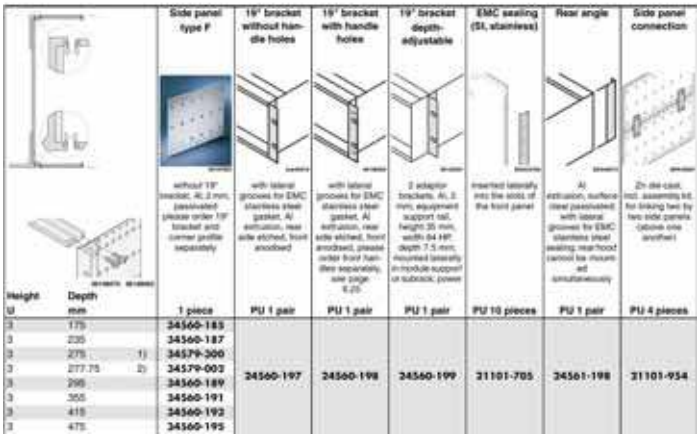

Height U	Depth mm	Side panel type F	19" bracket without handle holes	19" bracket with handle holes	19" bracket depth-adjustable	EMC sealing (SI, stainless)	Rear angle	Side panel connection
		1 piece	PU 1 pair	PU 1 pair	PU 1 pair	PU 10 pieces	PU 1 pair	PU 4 pieces
3	175	24560-185						
3	235	24560-187						
3	275 1)	24579-300						
3	277.75 2)	24579-002						
3	295	24560-189	24560-197	24560-198	24560-199	21101-705	24561-198	21101-954
3	355	24560-191						
3	415	24560-192						
3	475	24560-195						

06109052

You design your subrack as you wish, then receive it fully assembled via our **ServicePLUS assembly service** (even for orders of just one). We can also carry out individual modifications and cut-outs; and when time is short can do so very fast via ServicePLUS express.

HORIZONTAL RAILS AND SIDE PANELS FOR DIFFERENT LOAD-CARRYING CLASSES



06197007

Light



06197008

Heavy



06112004

Rugged

Horizontal rails are available for three load classes:

- "light" (load up to approx. 7.5 kg)
- "heavy" (load > 7.5 kg)
- "rugged" (load 15 kg)



06197002

Type Light



06197003

Type Flexible



06197004

Type Heavy

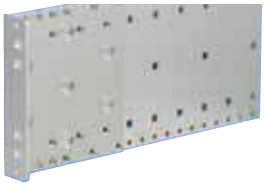

06112021

Type Rugged

Side panels for 4 different load classes

- Light: low-cost version with built-in 19" mounting bracket
- Flexible: with separate, depth-adjustable 19" mounting bracket
- Heavy: with integrated, tox-cold welded 19" mounting bracket, e.g. for shock and vibration environments up to 5 g
- Rugged: with integrated, tox-cold welded 19" mounting bracket and higher material thicknesses for extreme mechanical stresses, e.g. for increased shock and vibration environments up to 25 g
- The combination of the 3 horizontal rail variants with the 4 types of side panel results in an almost unlimited variety of potential applications for various market requirements

Subracks – EuropacPRO

GUIDE RAILS FROM PLASTIC AND ALUMINIUM PROFILES

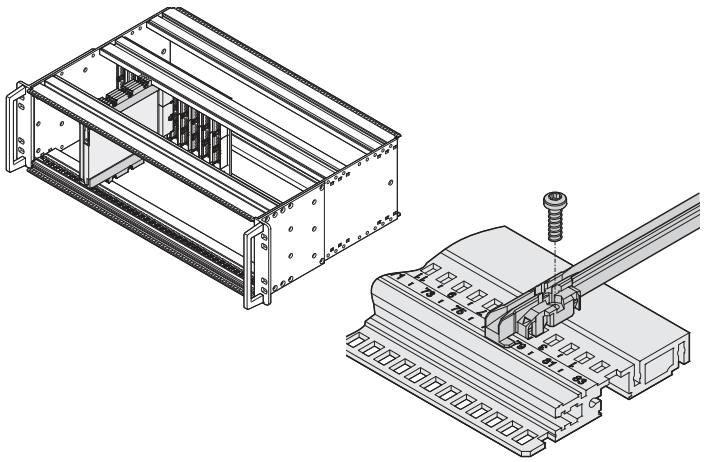

06112052 06111059

Guide rails form the interface between the subrack mechanics and the assemblies (boards, plug-in units, frame type plug-in units, drive unit modules, ...).

Robust snap-in fixings on the plastic rails assure a secure grip, even when exposed to vibrations. In the case of H and R-type horizontal rails the guide rails can also be bolted on. For extreme stresses, guide rails in aluminium extrusion are used.

To ensure that the wrong subassembly is not inserted into the wrong space we offer a mechanical coding to IEEE 1101.10/11 and IEC 60297-3-103.

The continuous numbering on the horizontal rail (from 28 HP) and the markings on the guide rails facilitate quick fitting in the correct position.

We offer the appropriate adaptors for accommodating VPX or CompactPCI boards with strengthening frame or conduction-cooled assemblies (CCA) installed in a subrack.

ELECTROMAGNETIC SHIELDING AND ESD

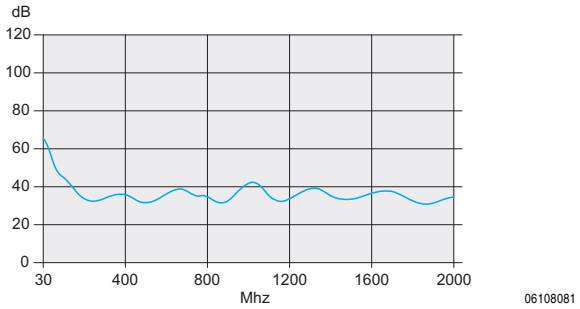

06108081

The product platform europacPRO offers a variety of off-the-shelf solutions to assure electromagnetic compatibility (EMC) and to avoid electrostatic discharge (ESD).

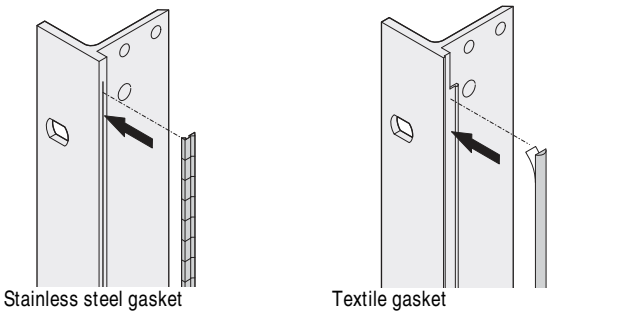

06108074 06108073

Two shielding concepts
It can't be more secure!

Two types of shielding concepts to front/rear of the subrack allow the use all Schroff frontpanels.

The shielding at the front of the subrack is by means of stainless steel or textile EMC gaskets.

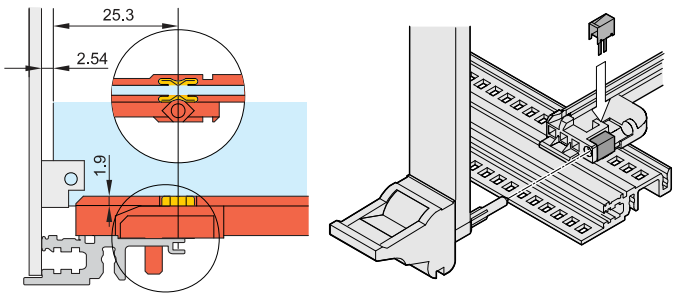

04503050 06103052

ESD (electrostatic discharge)
To avoid electrostatic discharge when inserting PCBs, ESD contacts are clipped into the guide rails. These establish a conductive connection between PCB and subrack-earth. Under IEC 60297-3-101 two ESD areas are defined on the euroboard. The ESD clips of the guide rail of the europacPRO subrack allow the assembly of both following variants:

- ESD area (bottom and top) over the complete board length
- ESD area (bottom/top) begins at the front from 70 mm to end of board)

North America

Warwick, RI, USA
Tel +1.401.738.1722
San Diego, CA, USA
Tel +1.858.740.2400

Europe, Middle East & India

Straubenhardt, Germany
Tel +49 7082 794 0
Betschdorf, France
Tel +33 3 88 90 64 90
Warsaw, Poland
Tel +48 22 209 98 35
Hemel Hempstead,
Great Britain
Tel +44 1442 24 04 71
Lainate, Italy
Tel +39 02 932 714 1
Dubai, United Arab Emirates
Tel +971 4 82 38 666
Bangalore, India
Tel +91 80 6715 8900
Istanbul, Turkey
Tel +90 541 368 0941

Asia Pacific

Shanghai, China
Tel +86 21 2412 6943
Singapore
Tel +65 6768 5800
Shin-Yokohama, Japan
Tel +81 45 476 0271

Our powerful portfolio of brands:

CADDY ERICO HOFFMAN RAYCHEM SCHROFF TRACER

nVent

nVent.com/SCHROFF

©2018 nVent. All nVent marks and logos are owned or licensed by nVent Services GmbH or its affiliates. All other trademarks are the property of their respective owners.
nVent reserves the right to change specifications without notice.