# E11746

## Connecting cable with socket

ADOAK190MSS0010H19

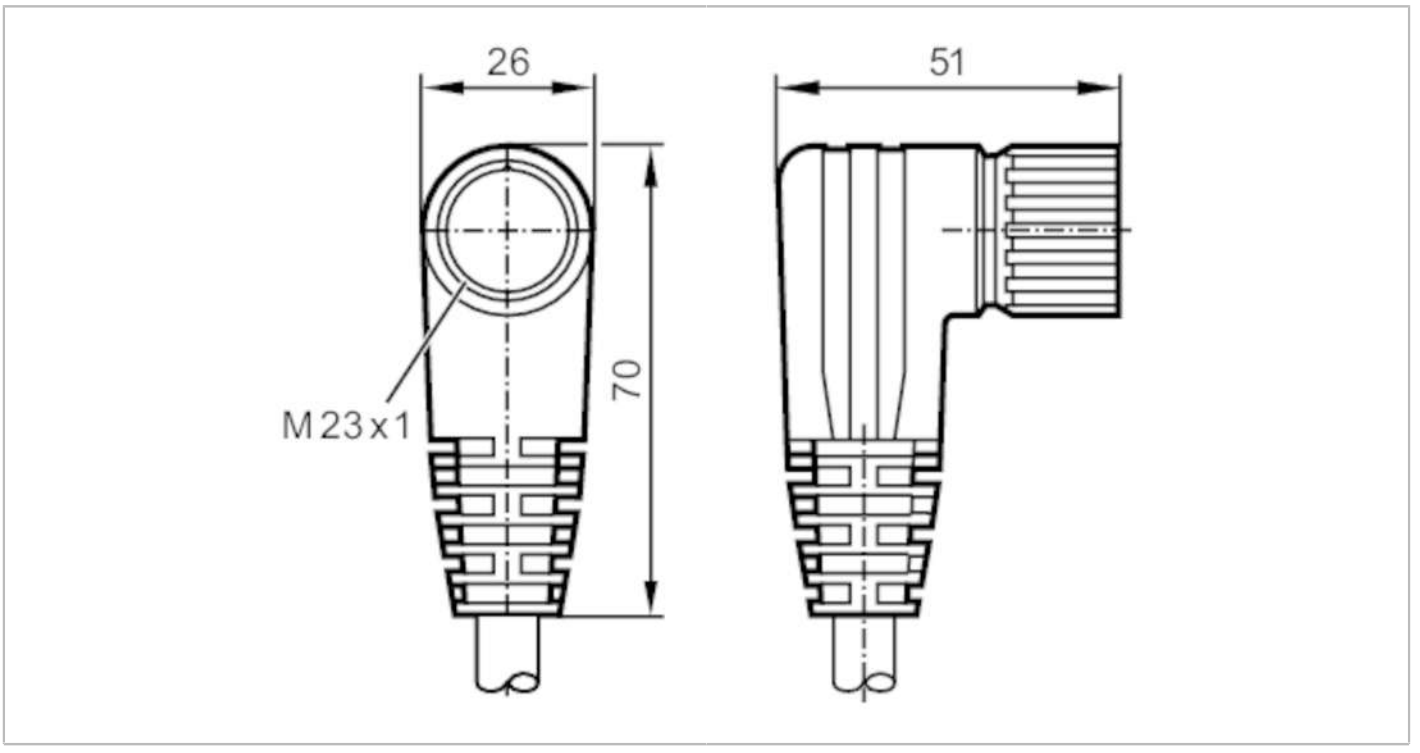


| | | |
|---|---|---|
| **Application** | | |
| Special feature | | Halogen-free |
| **Electrical data** | | |
| Operating voltage | [V] | < 63 AC/DC |
| Max. current load total | [A] | 8 |
| **Operating conditions** | | |
| Ambient temperature | [°C] | -25...80 |
| Protection | | IP 67 |
| **Mechanical data** | | |
| Weight | [g] | 2239 |
| Dimensions | [mm] | 51 x 26 x 70 |
| Materials | | PUR black |
| Moulded-body material | | PUR |
| Material nut | | brass, nickel-plated |
| Tightening torque | [Nm] | 2 |
| **Remarks** | | |
| Pack quantity | | 1 pcs. |

# E11746

## Connecting cable with socket

**ADOAK190MSS0010H19**

### Electrical connection

Cable: 10 m, PUR, Halogen-free, black, Ø 11.6 mm; 16 x 0.5 mm² (63 x Ø 0.1 mm ) + 3 x 1.0 mm² (127 x Ø 0.1 mm )

### Electrical connection - socket

Connector: 1 x M23, angled; Moulded body: PUR; Locking: brass, nickel-plated

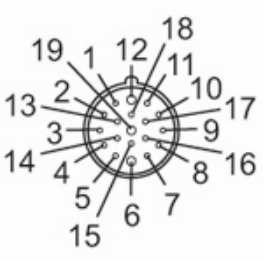

# E11746

## Connecting cable with socket

**ADOAK190MSS0010H19**

### Connection




Core colours :

| | |
|---|---|
| BK = | black |
| BN = | brown |
| BU = | blue |
| GN = | green |
| GY = | grey |
| PK = | pink |
| RD = | red |
| VT = | lilac |
| WH = | white |
| YE = | yellow |