Safety limit switches for hinged covers and guards
Double insulated, turret head, types XCS-PL, TL, PR and TR

Presentation

XCS-PL with 1 cable entry

With rotary operating head, with elbowed lever (flush with rear of switch) or straight lever, for hinged covers and guards

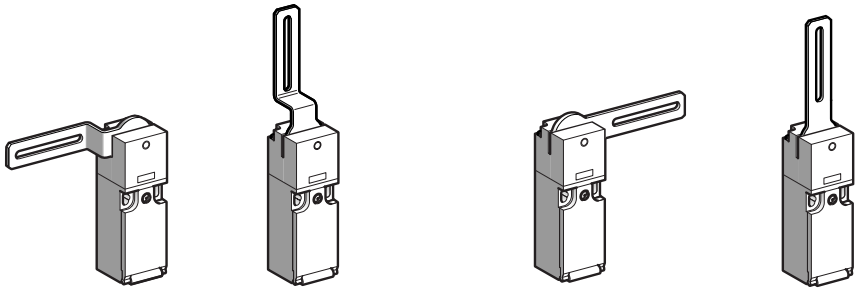

Pages 2/42, 2/40, 2/44

XCS-PR with 1 cable entry

With rotary operating head, with spindle operator, for hinged covers and guards

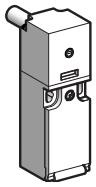

Pages 2/42, 2/40, 2/44

XCS-TL with 2 cable entries

With rotary operating head, with elbowed lever (flush with rear of switch) or straight lever, for hinged covers and guards

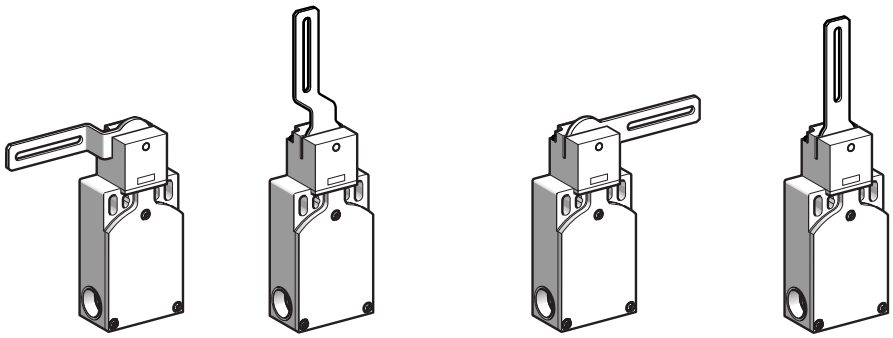

Pages 2/42, 2/40, 2/44

XCS-TR with 2 cable entries

With rotary operating head, with spindle operator, for hinged covers and guards

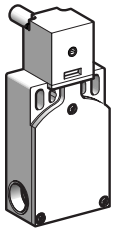

Pages 2/42, 2/40, 2/44

Safety limit switches for hinged covers and guards
Double insulated, turret head, types XCS-PL, TL, PR and TR

General characteristics

Environment

Conforming to standards	Products	IEC 947-5-1, EN 60 947-5-1/5-4, UL 508, CSA C22-2 n° 14
	Machine assemblies	IEC 204-1, EN 1088, EN 60 204-1, EN 292
Product certifications		UL, CSA
Protective treatment		Standard version: “TC” and “TH”
Ambient air temperature		Operation: - 25…+ 70 °C. Storage: - 40…+ 70 °C
Vibration resistance		50 gn (10…500 Hz) conforming to IEC 68-2-6
Shock resistance		50 gn (11 ms) conforming to IEC 68-2-27
Electric shock protection		Class 2 conforming to IEC 536
Degree of protection		**IP 67 conforming to IEC 529**
Cable entry		Depending on model, either: 1 entry tapped for Pg 11 (n° 11) cable gland, tapped M16 x 1.5 or tapped 1/2" NPT
Materials		Plastic body. Stainless steel lever and fixings.

Contact block characteristics

Rated operational characteristics	**~ AC-15; A300 (Ue = 240 V, Ie = 3 A)** **⎓ DC-13; Q300 (Ue = 250 V, Ie = 0,27 A) conforming to IEC 947-5-1 Appendix A, EN 60 947-5-1**
Rated insulation voltage	Ui = 500 V degree of pollution 3 conforming to IEC 947-1 Ui = 300 V conforming to UL 508, CSA C22-2 n° 14
Rated impulse withstand voltage	U imp = 6 kV conforming to IEC 947-1, IEC 664
Positive operation	N/C contact with positive opening operation conforming to IEC 947-5-1 Section 3, EN 60 947-5-1
Resistance across terminals	≤ 30 mΩ conforming to IEC 957-5-4
Short-circuit protection	10 A cartridge fuse type gG (gl)
Cabling	Screw clamp terminals Clamping capacity, min.: 1 x 0.5 mm², max.: 2 x 1.5 mm² with or without cable end
Minimum actuation speed	0.01 m/second

Electrical durability

Conforming to IEC 947-5-1 Appendix C.
Utilisation categories AC-15 and DC-13.
Maximum operating rate: 3600 operating cycles per hour.
Load factor: 0.5

a.c. supply ~ 50/60 Hz
∩∩∩ inductive circuit

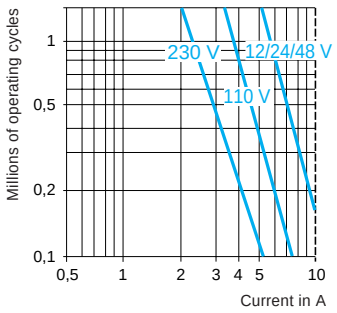

d.c. supply ⎓

Power broken in W for 1 million operating cycles

Voltage	**V**	**24**	**48**	**120**
∩∩∩	**W**	13	9	7

Components for safety applications

Safety limit switches for hinged covers and guards
Double insulated, turret head, types XCS-PL, TL, PR and TR
Cable entries tapped M16 x 1.5

References, characteristics

Type	Elbowed lever (flush with rear of switch)			Straight lever		Spindle
	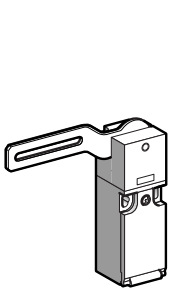	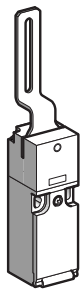	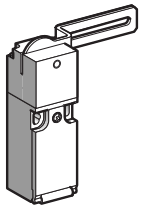	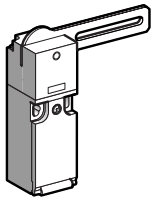	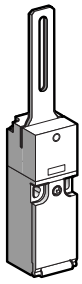	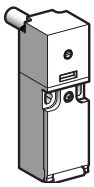
Operator	To left	Centred	To right	To right or to left	Centred	Length 30 mm (2)

References (⊖ N/C contact with positive opening operation)

2-pole N/C + N/O break before make slow break 	**XCS-PL592** ⊖	**XCS-PL582** ⊖	**XCS-PL572** ⊖	**XCS-PL562** ⊖	**XCS-PL552** ⊖	**XCS-PR552** ⊖
2-pole N/C + N/C slow break 	**XCS-PL792** ⊖	**XCS-PL782** ⊖	**XCS-PL772** ⊖	**XCS-PL762** ⊖	**XCS-PL752** ⊖	**XCS-PR752** ⊖
Weight (kg)	0.095	0.095	0.095	0.095	0.095	0.105

	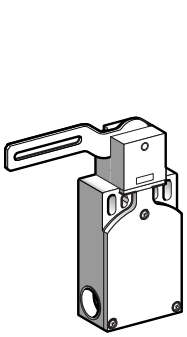	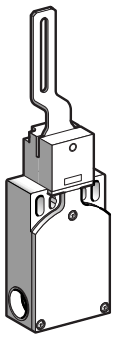	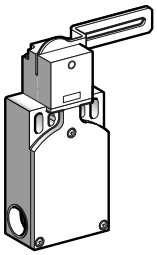	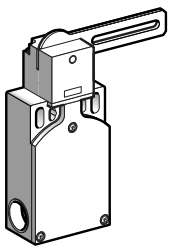	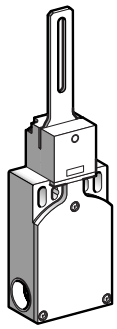	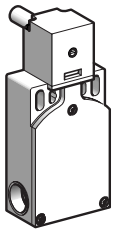
Operator	To left	Centred	To right	To right or to left	Centred	Length 30 mm (2)

References (⊖ N/C contact with positive opening operation)

3-pole N/C + N/O + N/O (2 N/O staggered) slow break 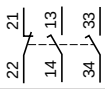	**XCS-TL592** ⊖	**XCS-TL582** ⊖	**XCS-TL572** ⊖	**XCS-TL562** ⊖	**XCS-TL552** ⊖	**XCS-TR552** ⊖
3-pole N/C + N/C + N/O (N/O staggered) slow break 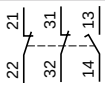	**XCS-TL792** ⊖	**XCS-TL782** ⊖	**XCS-TL772** ⊖	**XCS-TL762** ⊖	**XCS-TL752** ⊖	**XCS-TR752** ⊖
3-pole N/C + N/C + N/C slow break 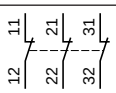	**XCS-TL892** ⊖	**XCS-TL882** ⊖	**XCS-TL872** ⊖	**XCS-TL862** ⊖	**XCS-TL852** ⊖	**XCS-TR852** ⊖
Weight (kg)	0.145	0.145	0.145	0.145	0.145	0.155

Complementary characteristics not shown under general characteristics (page 2/39)

Lever displacement tripping angle	5°
Mechanical durability	**1 million operating cycles**
Minimum torque	For tripping: 0.1 N.m; for positive opening: 0.25 N.m (XCS-PL and XCS-PR), 0.45 N.m (XCS-TL and XCS-TR)
Cable entry	**XCS-P●**: 1 cable entry tapped M16 x 1.5 for ISO cable gland. Clamping capacity 7 to 10 mm. **XCS-T●**: 2 cable entries tapped M16 x 1.5 for ISO cable gland. Clamping capacity 7 to 10 mm. (Switch supplied with 1 entry fitted with blanking plug).

(1) Adjustable through 360° in 90° steps. Switches supplied with 2 additional self locking screws for positive fixing of the operating head.
(2) For switches with 80 mm spindle: replace the second reference digit **5** with a **6**. E.g.: **XCS-PR552** becomes **XCS-PR562.** The weight increases by 0.032 kg.

Components for safety applications

Safety limit switches for hinged covers and guards
Double insulated, turret head, types XCS-PL, TL, PR and TR
Cable entries tapped for Pg 11 (n° 11) cable gland

Operation, dimensions, schemes

Operation

Operator displacement

XCS-PL●92, XCS-PL●72 XCS-PL●62

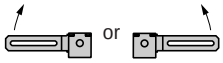

XCS-PL●82, XCS-PL●52

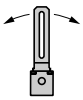

XCS-TL●92, XCS-TL●72 XCS-TL●62

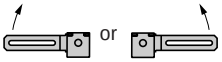

XCS-TL●82, XCS-TL●52

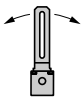

XCS-PR●52



XCS-TR●52



Function diagrams

XCS-PL592, XCS-PL572 XCS-PL562



XCS-PL582, XCS-PL552

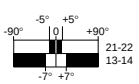

XCS-TL592, XCS-TL572 XCS-TL562

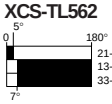

XCS-TL582, XCS-TL552

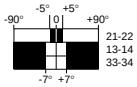

XCS-PR552

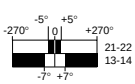

XCS-TR552

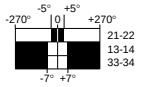

XCS-PL792, XCS-PL772 XCS-PL762

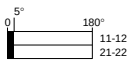

XCS-PL782, XCS-PL752

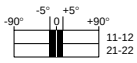

XCS-TL792, XCS-TL772 XCS-TL762

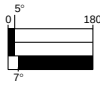

XCS-TL782, XCS-TL752

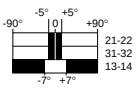

XCS-PR752

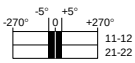

XCS-TR752

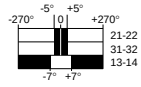

XCS-TL892, XCS-TL872 XCS-TL862

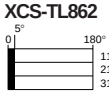

XCS-TL882, XCS-PL852

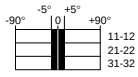

XCS-TR852

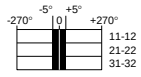

Contact operation
■ contact closed
□ contact open

Dimensions

XCS-PL● ●2

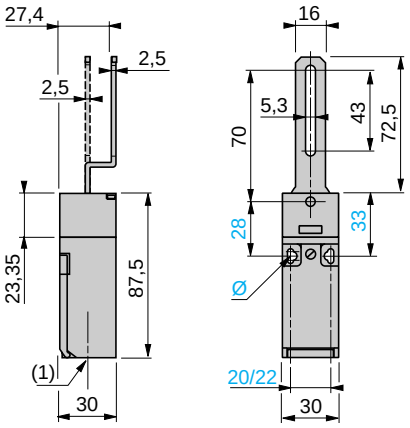

(1) 1 cable entry tapped M16 x 1.5
Ø: 2 elongated holes Ø 4.3x8.3 on 22mm centres
2 holes Ø 4.3 on 20 mm centres

XCS-TL● ●2

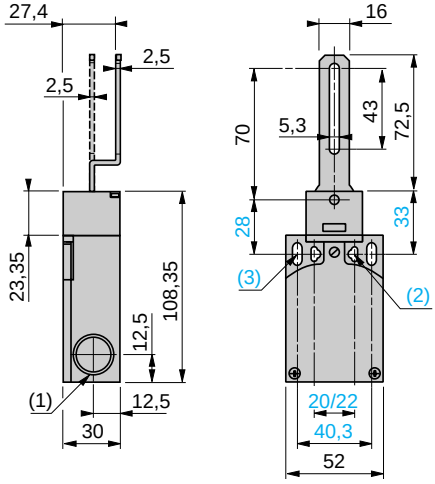

(1) 2 cable entries tapped M16 x 1.5
(2) 2 elongated holes Ø 4.3x8.3 on 22mm centres
2 holes Ø 4.3 on 20 mm centres
(3) 2 elongated holes Ø 5.3x13.3

XCS-PR● ●2

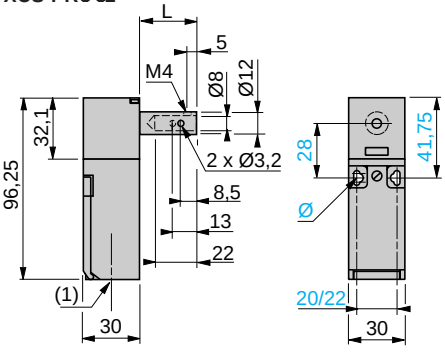

(1) 1 cable entry tapped M16 x 1.5
Ø: 2 elongated holes Ø 4.3x8.3 on 22mm centres
2 holes Ø 4.3 on 20 mm centres
L = 30 (XCS-PR●52) or 80 (XCS-PR●62)

XCS-TR● ●2

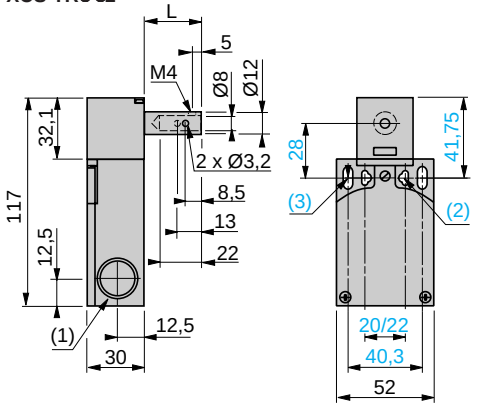

(1) 2 cable entries tapped M16 x 1.5
(2) 2 elongated holes Ø 4.3x8.3 on 22mm centres
2 holes Ø 4.3 on 20 mm centres
(3) 2 elongated holes Ø 5.3x13.3
L = 30 (XCS-TR●52) or 80 (XCS-TR●62)

Wiring schemes

Category 1 conforming to EN 954-1

Example with cable short-circuit protection fuse

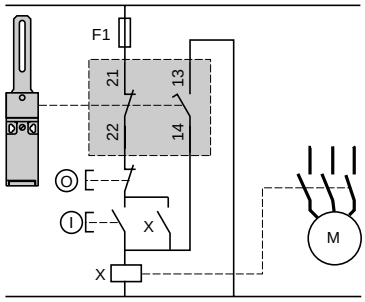

Category 3 conforming to EN 954-1

Example with 3-pole N/C + N/O + N/O contact with mixed redundancy of the contacts and the associated control relays.

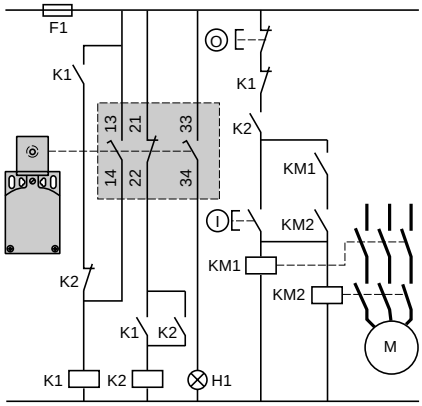

To activate K1, the lever or the spindle must be rotated when the supply is switched on.
H1: "lever or spindle displaced from initial position" indicator. When used in conjunction with a PREVENTA XPS safety module and another safety limit switch, the rotary lever or spindle operator safety limit switch can provide a category 3 or 4 control and monitoring system for moving guards conforming to EN 954-1.

Safety limit switches for hinged covers and guards
Double insulated, turret head, types XCS-PL, TL, PR and TR
Cable entries tapped for Pg 11 (n° 11) cable gland

References, characteristics

2

Type	Elbowed lever (flush with rear of switch)			Straight lever		Spindle
For UK market, please refer to pages 2/40 and 2/41	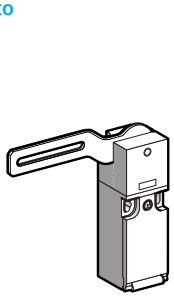	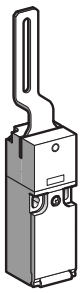	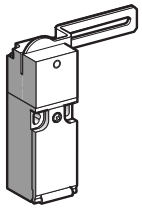	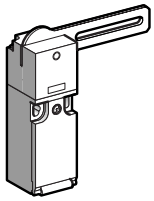	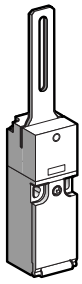	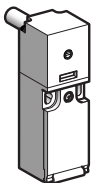
Operator	To left	Centred	To right	To right or to left	Centred	Length 30 mm (2)

References (⊖ N/C contact with positive opening operation)

2-pole N/C + N/O break before make slow break 	**XCS-PL591** ⊖	**XCS-PL581** ⊖	**XCS-PL571** ⊖	**XCS-PL561** ⊖	**XCS-PL551** ⊖	**XCS-PR551** ⊖
2-pole N/C + N/C slow break 	**XCS-PL791** ⊖	**XCS-PL781** ⊖	**XCS-PL771** ⊖	**XCS-PL761** ⊖	**XCS-PL751** ⊖	**XCS-PR751** ⊖
Weight (kg)	0.095	0.095	0.095	0.095	0.095	0.105

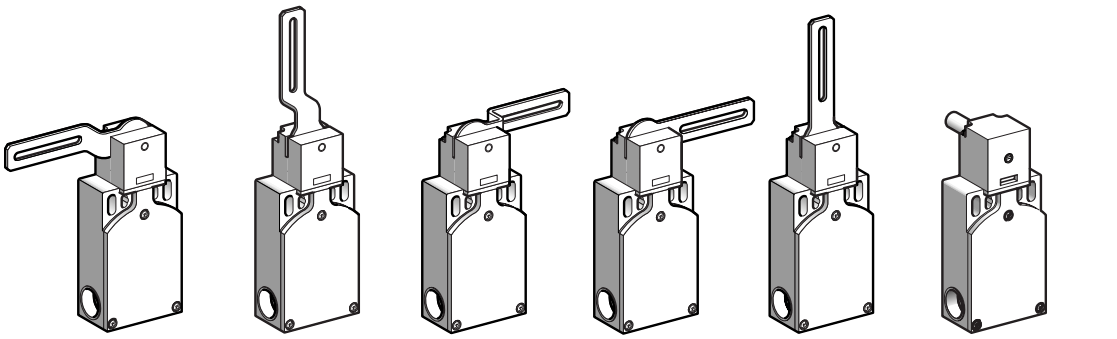

Operator	To left	Centred	To right	To right or to left	Centred	Length 30 mm (2)

References (⊖ N/C contact with positive opening operation)

3-pole N/C + N/O + N/O (2 N/O staggered) slow break 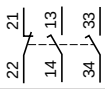	**XCS-TL591** ⊖	**XCS-TL581** ⊖	**XCS-TL571** ⊖	**XCS-TL561** ⊖	**XCS-TL551** ⊖	**XCS-TR551** ⊖
3-pole N/C + N/C + N/O (N/O staggered) slow break 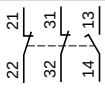	**XCS-TL791** ⊖	**XCS-TL781** ⊖	**XCS-TL771** ⊖	**XCS-TL761** ⊖	**XCS-TL751** ⊖	**XCS-TR751** ⊖
3-pole N/C + N/C + N/C slow break 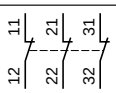	**XCS-TL891** ⊖	**XCS-TL881** ⊖	**XCS-TL871** ⊖	**XCS-TL861** ⊖	**XCS-TL851** ⊖	**XCS-TR851** ⊖
Weight (kg)	0.145	0.145	0.145	0.145	0.145	0.155

Complementary characteristics not shown under general characteristics (page 2/39)

Lever displacement tripping angle	5°
Mechanical durability	**1 million operating cycles**
Minimum torque	For tripping: 0.1 N.m; for positive opening: 0.25 N.m (XCS-PL and XCS-PR), 0.45 N.m (XCS-TL and XCS-TR)
Cable entry	**XCS-P●**: 1 cable entry tapped for n° 11 cable gland to NF C 68-300 (DIN Pg 11). Clamping capacity 7 to 10 mm. **XCS-T●**: 2 cable entries tapped for n° 11 cable gland to NF C 68-300 (DIN Pg 11). Clamping capacity 7 to 10 mm. (Switch supplied with 1 entry fitted with blanking plug).

(1) Adjustable through 360° in 90° steps. Switches supplied with 2 additional self locking screws for positive fixing of the operating head.
(2) For switches with 80 mm spindle: replace the second reference digit **5** with a **6**. E.g.: **XCS-PR551** becomes **XCS-PR561.** The weight increases by 0.032 kg.

Safety limit switches for hinged covers and guards
Double insulated, turret head, types XCS-PL, TL, PR and TR
Cable entries tapped for Pg 11 (n° 11) cable gland

For UK market, please refer to pages 2/40 and 2/41

Operation, dimensions, schemes

Operation

Operator displacement

XCS-PL●91, XCS-PL●71 XCS-PL●61

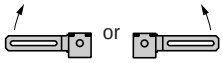

XCS-PL●81, XCS-PL●51

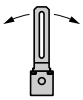

XCS-TL●91, XCS-TL●71 XCS-TL●61

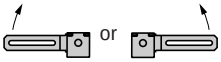

XCS-TL●81, XCS-TL●51

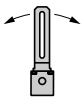

XCS-PR●51



XCS-TR●51



Function diagrams

XCS-PL591, XCS-PL571 XCS-PL561



XCS-PL581, XCS-PL551

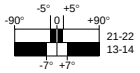

XCS-TL591, XCS-TL571 XCS-TL561

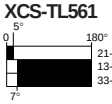

XCS-TL581, XCS-TL551

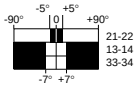

XCS-PR551

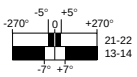

XCS-TR551

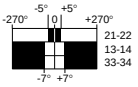

XCS-PL791, XCS-PL771 XCS-PL761

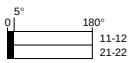

XCS-PL781, XCS-PL751

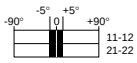

XCS-TL791, XCS-TL771 XCS-TL761

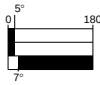

XCS-TL781, XCS-TL752

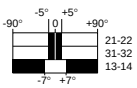

XCS-PR751

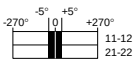

XCS-TR751

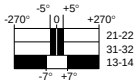

XCS-TL891, XCS-TL871 XCS-TL861

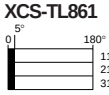

XCS-TL881, XCS-PL851

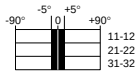

XCS-TR851

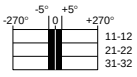

Contact operation
- contact closed
- contact open

Dimensions

XCS-PL●●1

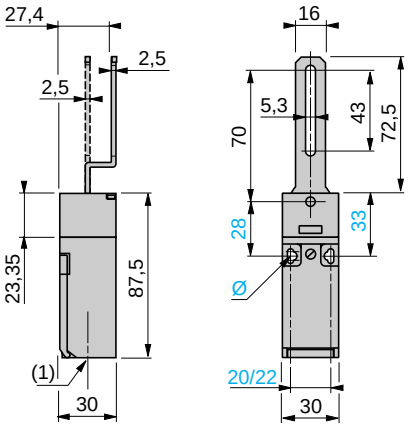

(1) 1 cable entry tapped for n° 11 cable gland
Ø: 2 elongated holes Ø 4.3x8.3 on 22mm centres
2 holes Ø 4.3 on 20 mm centres

XCS-TL●●1

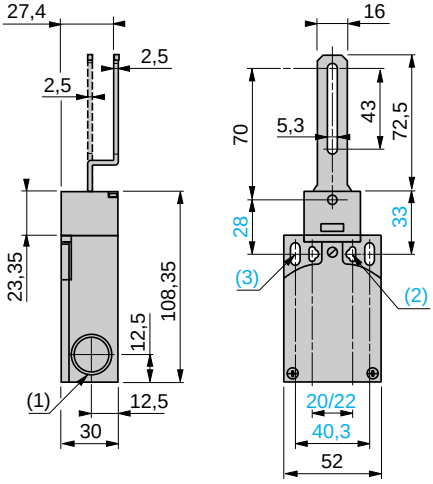

(1) 2 cable entries tapped for n° 11 cable gland
(2) 2 elongated holes Ø 4.3x8.3 on 22mm centres
2 holes Ø 4.3 on 20 mm centres
(3) 2 elongated holes Ø 5.3x13.3

XCS-PR●●1

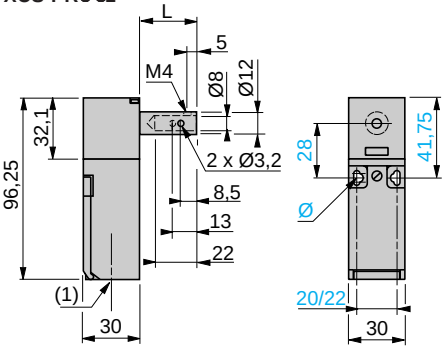

(1) 1 cable entry tapped for n° 11 cable gland
Ø: 2 elongated holes Ø 4.3x8.3 on 22mm centres
2 holes Ø 4.3 on 20 mm centres
L = 30 (XCS-PR●51) or 80 (XCS-PR●61)

XCS-TR●●1

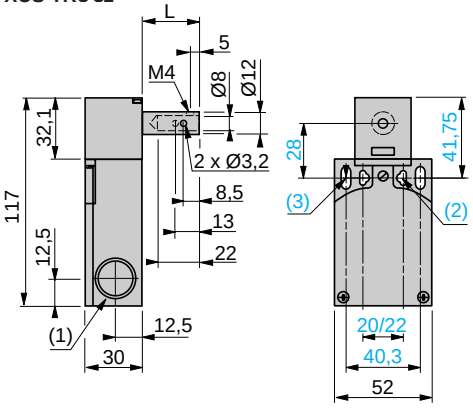

(1) 2 cable entries tapped for n° 11 cable gland
(2) 2 elongated holes Ø 4.3x8.3 on 22mm centres
2 holes Ø 4.3 on 20 mm centres
(3) 2 elongated holes Ø 5.3x13.3
L = 30 (XCS-TR●51) or 80 (XCS-TR●61)

Wiring schemes

Category 1 conforming to EN 954-1

Example with cable short-circuit protection fuse

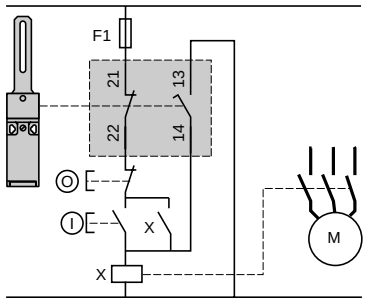

Category 3 conforming to EN 954-1

Example with 3-pole N/C + N/O + N/O contact with mixed redundancy of the contacts and the associated control relays.

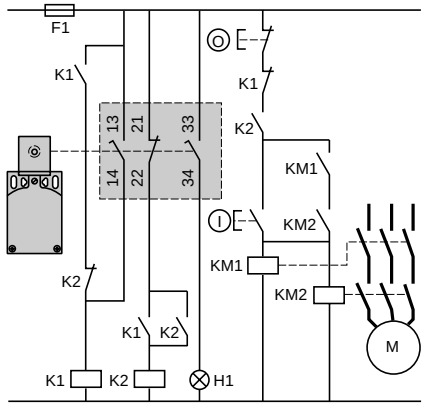

To activate K1, the lever or the spindle must be rotated when the supply is switched on.
H1: "lever or spindle displaced from initial position" indicator When used in conjunction with a PREVENTA XPS safety module and another safety limit switch, the rotary lever or spindle operator safety limit switch can provide a category 3 or 4 control and monitoring system for moving guards conforming to EN 954-1.

Safety limit switches with rotary lever or spindle operator
Double insulated, turret head, types XCS-PL, TL, PR and TR
Cable entries tapped 1/2" NPT

References, characteristics

2

Type	Elbowed lever (flush with rear of switch)		Straight lever		Spindle
For UK market, please refer to pages 2/40 and 2/41	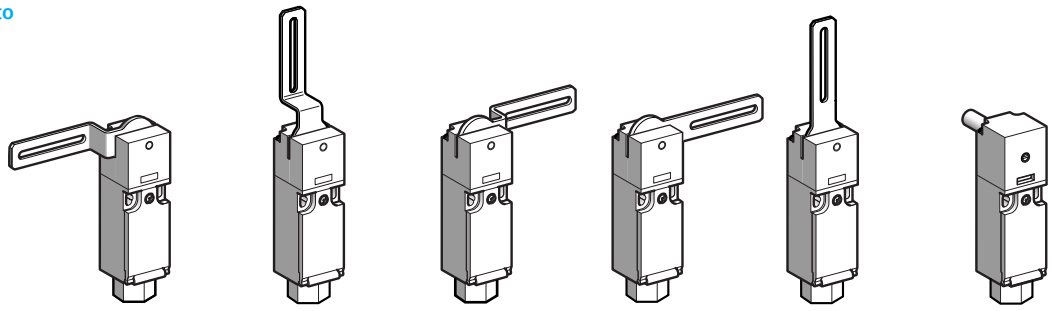				
Operator	To left	Centred	To right	To right or to left	Centred	Length 30 mm (2)

References (⊖ N/C contact with positive opening operation)

2-pole N/C + N/O break before make slow break 	**XCS-PL593** ⊖	**XCS-PL583** ⊖	**XCS-PL573** ⊖	**XCS-PL563** ⊖	**XCS-PL553** ⊖	**XCS-PR553** ⊖
2-pole N/C + N/C slow break 	**XCS-PL793** ⊖	**XCS-PL783** ⊖	**XCS-PL773** ⊖	**XCS-PL763** ⊖	**XCS-PL753** ⊖	**XCS-PR753** ⊖
Weight (kg)	0.110	0.110	0.110	0.110	0.110	0.120

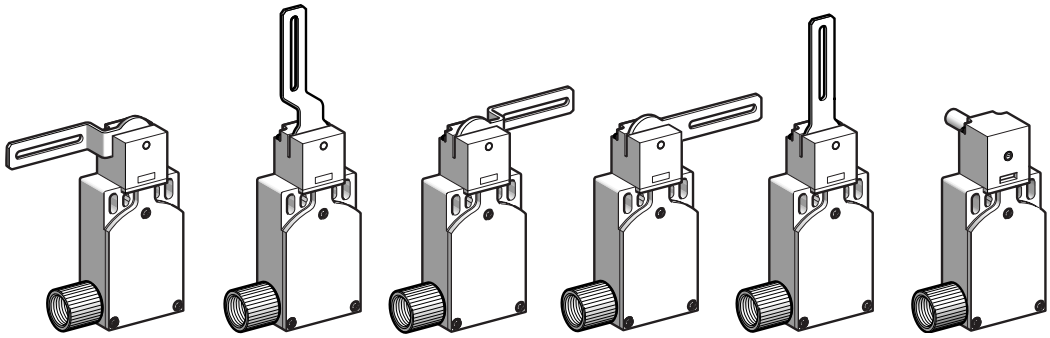

Operator	To left	Centred	To right	To right or to left	Centred	Length 30 mm (2)

References (⊖ N/C contact with positive opening operation)

3-pole N/C + N/O + N/O (2 N/O staggered) slow break 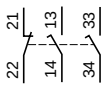	**XCS-TL593** ⊖	**XCS-TL583** ⊖	**XCS-TL573** ⊖	**XCS-TL563** ⊖	**XCS-TL553** ⊖	**XCS-TR553** ⊖
3-pole N/C + N/C + N/O (N/O staggered) slow break 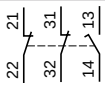	**XCS-TL793** ⊖	**XCS-TL783** ⊖	**XCS-TL773** ⊖	**XCS-TL763** ⊖	**XCS-TL753** ⊖	**XCS-TR753** ⊖
3-pole N/C + N/C + N/C slow break 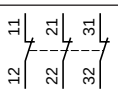	**XCS-TL893** ⊖	**XCS-TL883** ⊖	**XCS-TL873** ⊖	**XCS-TL863** ⊖	**XCS-TL853** ⊖	**XCS-TR853** ⊖
Weight (kg)	0.160	0.160	0.160	0.160	0.160	0.170

Complementary characteristics not shown under general characteristics (page 32912/3)

Lever displacement tripping angle	5°
Mechanical durability	**1 million operating cycles**
Minimum torque	For tripping: 0.1 N.m; for positive opening: 0.25 N.m (XCS-PL and XCS-PR), 0.45 N.m (XCS-TL and XCS-TR)
Cable entry	**XCS-P●**: 1 cable entry tapped for 1/2" NPT (USAS B2-1) conduit. **XCS-T●**: 2 cable entries tapped 11 mm, 1 fitted with metal adaptor DE9-RA1012 for 1/2" NPT (USAS B2-1) conduit. (Switch supplied with 1 entry fitted with blanking plug)..

(1) Adjustable through 360° in 90° steps. Switches supplied with 2 additional self locking screws for positive fixing of the operating head.
(2) For switches with 80 mm spindle: replace the second reference digit **5** with a **6**. E.g.: **XCS-PR553** becomes **XCS-PR563.** The weight increases by 0.032 kg.

Safety limit switches with rotary lever or spindle operator
Double insulated, turret head, types XCS-PL, TL, PR and TR
Cable entries tapped 1/2" NPT

For UK market, please refer to pages 2/40 and 2/41

Operation, dimensions, schemes

Operation

Operator displacement

XCS-PL●93, XCS-PL●73 XCS-PL●63

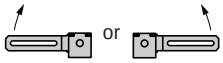

XCS-PL●83, XCS-PL●53

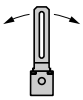

XCS-TL●93, XCS-TL●73 XCS-TL●63

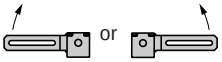

XCS-TL●83, XCS-TL●53

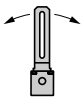

XCS-PR●53



XCS-TR●53



Function diagrams

XCS-PL593, XCS-PL573 XCS-PL563



XCS-PL583, XCS-PL553

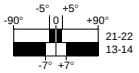

XCS-TL593, XCS-TL573 XCS-TL563

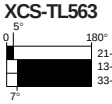

XCS-TL583, XCS-TL553

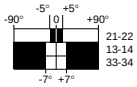

XCS-PR553

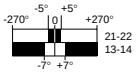

XCS-TR553

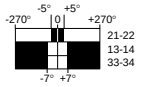

XCS-PL793, XCS-PL773 XCS-PL763

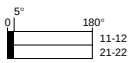

XCS-PL783, XCS-PL753

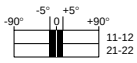

XCS-TL793, XCS-TL773 XCS-TL763

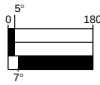

XCS-TL783, XCS-TL753

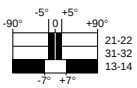

XCS-PR753

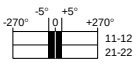

XCS-TR753

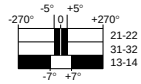

XCS-TL893, XCS-TL873 XCS-TL863

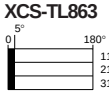

XCS-TL883, XCS-PL853

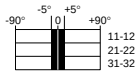

XCS-TR853

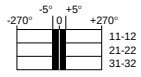

Contact operation
- contact closed
- contact open

Dimensions

XCS-PL● ●2

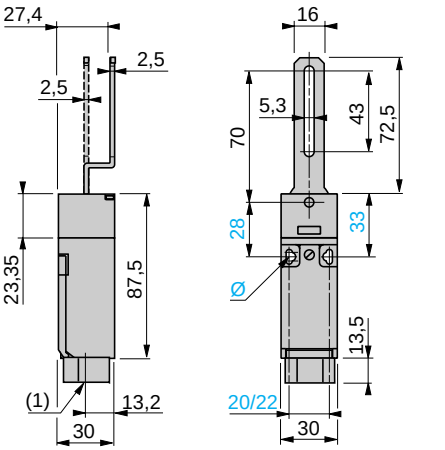

(1) 1 cable entry tapped for 1/2" NPT conduit
Ø: 2 elongated holes Ø 4.3x8.3 on 22mm centres
2 holes Ø 4.3 on 20 mm centres

XCS-TL● ●2

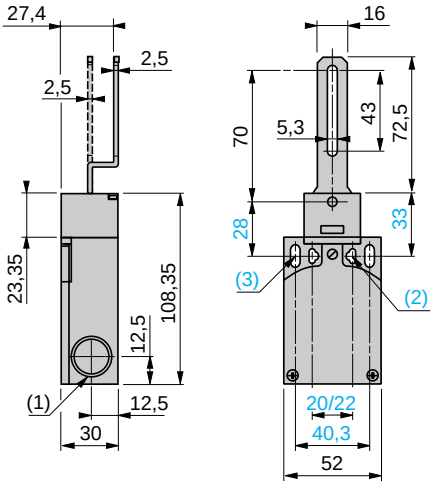

(1) 2 entries tapped 11 mm for 1/2" NPT conduit adaptor
(2) 2 elongated holes Ø 4.3x8.3 on 22mm centres
2 holes Ø 4.3 on 20 mm centres
(3) 2 elongated holes Ø 5.3x13.3

XCS-PR● ●3

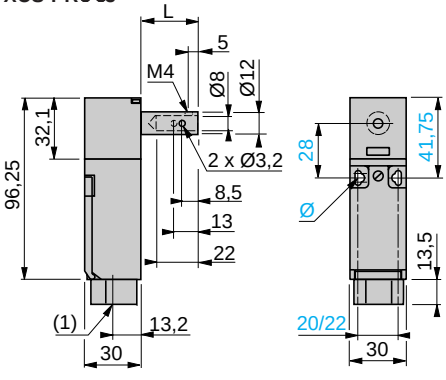

(1) 1 cable entry tapped for 1/2" NPT conduit
Ø: 2 elongated holes Ø 4.3x8.3 on 22mm centres
2 holes Ø 4.3 on 20 mm centres
L = 30 (XCS-PR●53) or 80 (XCS-PR●63)

XCS-TR● ●3

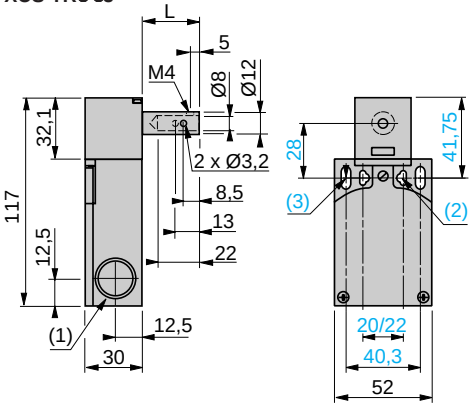

(1) 2 entries tapped 11 mm for 1/2" NPT conduit adaptor
(2) 2 elongated holes Ø 4.3x8.3 on 22mm centres
2 holes Ø 4.3 on 20 mm centres
(3) 2 elongated holes Ø 5.3x13.3
L = 30 (XCS-TR●53) or 80 (XCS-TR●63)

Wiring schemes

Category 1 conforming to EN 954-1

Example with cable short-circuit protection fuse

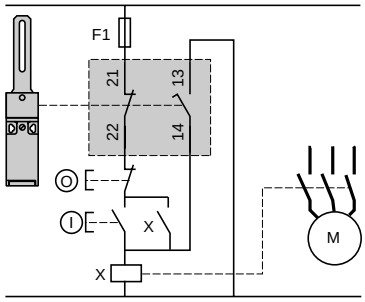

Category 3 conforming to EN 954-1

Example with 3-pole N/C + N/O + N/O contact with mixed redundancy of the contacts and the associated control relays.

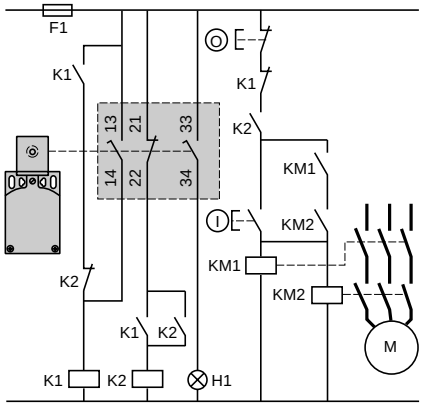

To activate K1, the lever or the spindle must be rotated when the supply is switched on.
H1: "lever or spindle displaced from initial position" indicator. When used in conjunction with a PREVENTA XPS safety module and another safety limit switch, the rotary lever or spindle operator safety limit switch can provide a category 3 or 4 control and monitoring system for moving guards conforming to EN 954-1.