cavity floor service outlet box

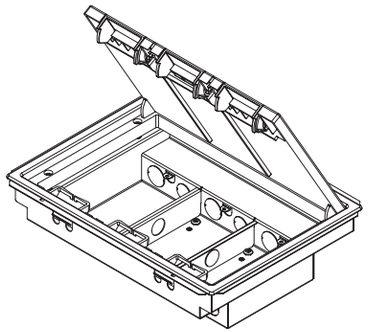

Pack	Cat. Nos.	Contractor floor box
1	CB3	Supplied empty Ready to accept standard BS two gang wiring accessories Additional mounting plates not required Recommended hole cut-out size : 302 - 304 x 219 - 221 mm 7 mm lid recess Standard depth : 80 mm 20/25 mm knockouts to each compartment Manufactured from pre-galvanised steel to BS EN 10142 and 3, and polycarbonate/ABS 3 compartment contractor floor box

How to order

CB1 has been updated and replaced. Please now **order part number CB3** from your wholesaler.

Head office (UK and Ireland):
Legrand Electric Limited
Great King Street North, Birmingham, B19 2LF
Tel: +44 (0) 870 608 9000 Fax: +44 (0) 870 608 9004
Website: www.legrand.co.uk

The Legrand logo is a registered trademark of the Legrand group of companies.

CB3 leaflet 09 /2012.0.5K

NEW contractor floor box - CB3

Much more than a fresh new face



POWERED BY SPECIALISTS

03327-CB3 A5 leaflet V2.indd 1 06/09/2012 16:22

NEW contractor floor box - CB3

As part of a continual product development programme Legrand is updating its popular CB1 contractor floor box, incorporating a number of significant features designed to make installation quicker and easier whilst maintaining its competitive price point.

New part number: Order CB3 instead of CB1



Simple flooring inlay shape

No awkward shapes to cut around – quicker, easier and simpler. Strong polycarbonate/ABS hinged lid with steel reinforced insert complete with 3 sturdy cable outlets that fix in the open position to protect cables.



Push fit steel back box

Push fit steel back box fits into the floor even quicker than before.

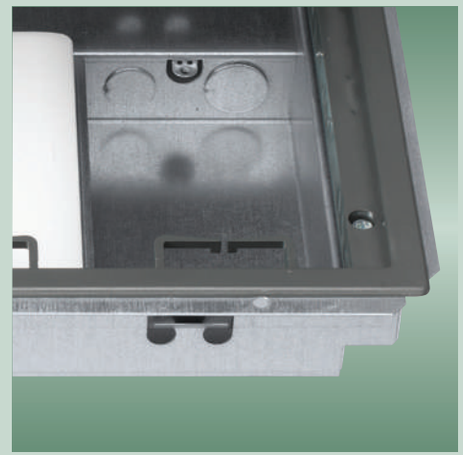

Multi-size knockouts

20/25mm knockouts in each compartment for cabling flexibility.



Easy fitting of BS wiring accessories

Each compartment accepts standard BS wiring accessories. No need for additional mounting plates.