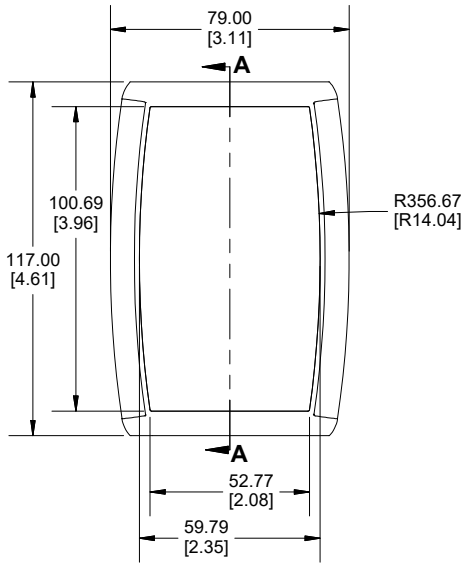

TOP VIEW

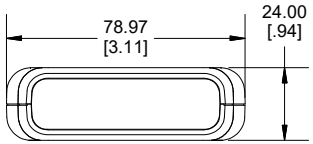

END VIEW

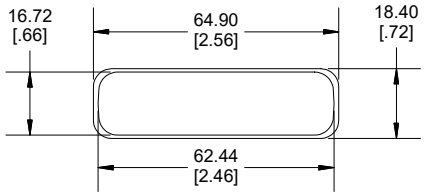

END PANEL

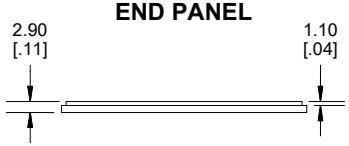

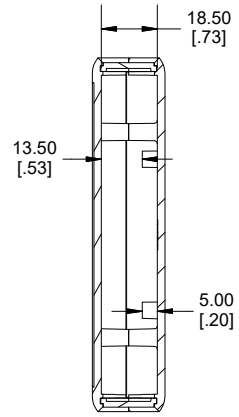

SECTION A-A

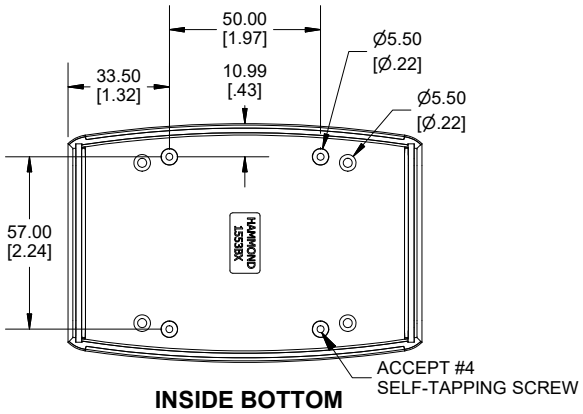

INSIDE BOTTOM

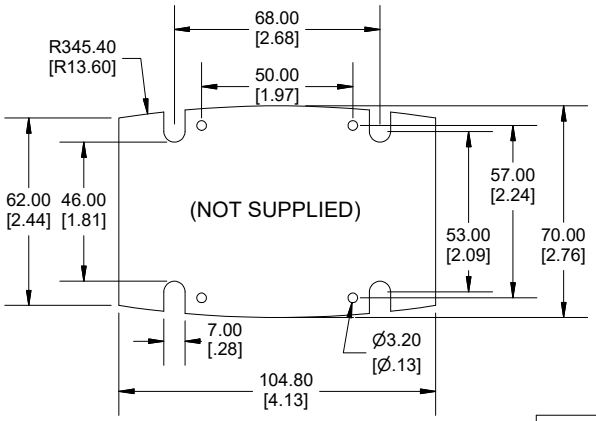

MAXIMUM P.C.B. SIZE



Enclosures can be Factory Modified (Milling, Drilling, Printing etc.)
Contact Factory (modshop@hammfg.com) for quotes
Solid models of this enclosure available in .stp or .x_t
(Part number and text placement/orientation on our products are subject to change, we do not recommend using them as a locating reference for modification purposes)

NOTE
Enclosure molded from GP ABS Plastic.
Purchased assembly includes Top, Bottom, 2 plastic end panels and 4 cover screws. (P.C. Board not supplied)
Recommended Cover screw torque -- 2.5 lbf-in (30 cN-m)

PART NUMBER	
1553 Regular Enclosure	
Black Enclosure/Grey Over-mold	1553BXBK
Grey Enclosure/Grey Over-mold	1553BXGY
ACCESSORIES	
Oval Head Cover Screws Self-Tapping (Pkg 100) [#4 X 3/4" (19mm)]	1593QS100 (Silver) 1593QS100BK (Black)
Belt or Pocket Clip	1599CLIP (Black) 1599CLIPGY (Grey)
P.C. Board Self Tapping Screw [#4 X 1/4" (6.4mm) Plated]	1593ATS50 (Pkg 50) 1593ATS100 (Pkg 100)

Dimensions:
mm
[inches]

HAMMOND MANUFACTURING®
1553BX
www.hammondmfg.com

REV: 26.11.2020