Female thread double wall bracket - Outlet 2 couplers and drain



Description		
Reference	**Inlet BSPP female thread**	**Outlet BSPP female thread**
MF 104S2	G 3/4	G 1/2
MF 103S2	G 1/2	G 1/2

Prevost UK LTD - Unit G, Tower Business Park - Commercial Road - BB3 OFJ Darwen - Lancashire - United kingdom Phone.
(+44) 01254 873 389 -sales@prevost-ltd.co.uk - www.prevost.eu

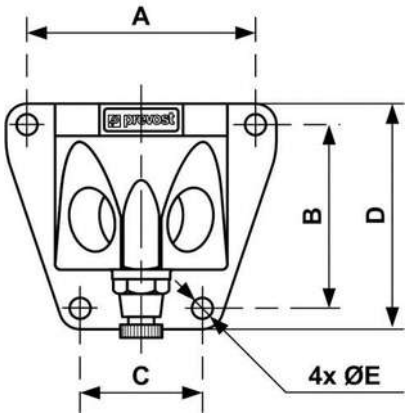

Dimensions					
Reference	**A mm**	**B mm**	**C mm**	**D mm**	**E mm**
MF 104S2	71	57	38	70	6.5
MF 103S2	71	57	38	70	6.5