NJ 212 ECP

Popular item
SKF Explorer

Dimensions

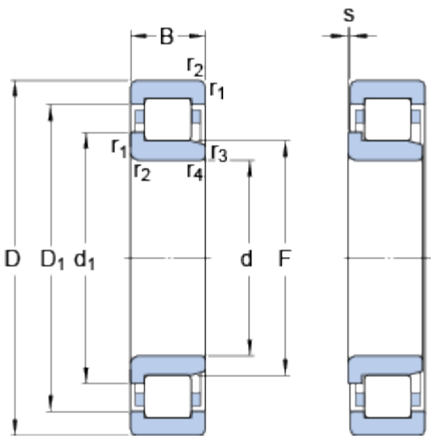

d		60	mm
D		110	mm
B		22	mm
d_1	≈	77.5	mm
D_1	≈	95.1	mm
F		72	mm
$r_{1,2}$	min.	1.5	mm
$r_{3,4}$	min.	1.5	mm
s	max.	1.4	mm

Abutment dimensions

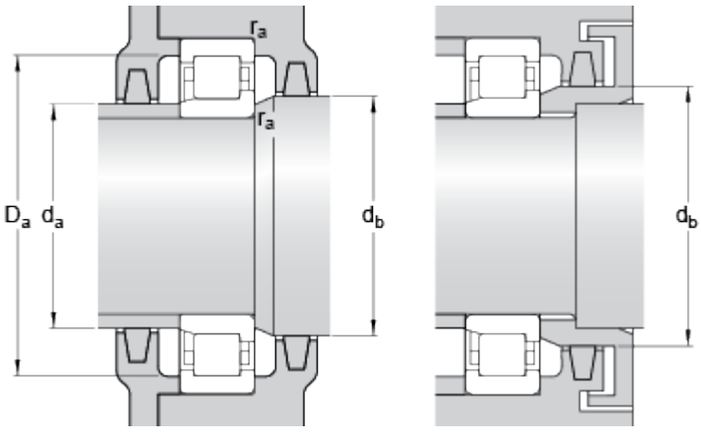

d_a	min.	68	mm
d_a	max.	70	mm
d_b	min.	80	mm
D_a	max.	101	mm
r_a	max.	1.5	mm

Calculation data

Basic dynamic load rating	C	108	kN
Basic static load rating	C_0	102	kN
Fatigue load limit	P_u	13.4	kN
Reference speed		6700	r/min
Limiting speed		7500	r/min
Calculation factor	k_r	0.15	
Limiting value	e	0.2	
Axial load factor	Y	0.6	

Mass

Mass bearing	0.82	kg

Associated products

Angle ring	HJ 212 EC