10501-005 FRONT HANDLE ONE-PIECE, WIDTH 12.2 MM, CLEAR ANODIZED, 3 U



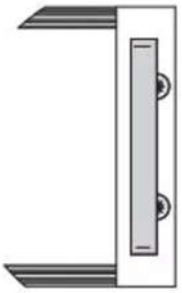

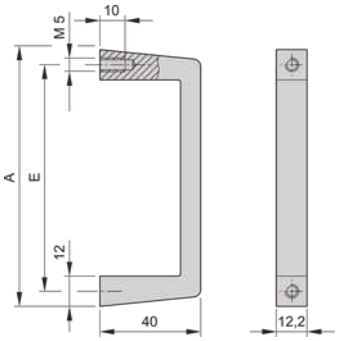

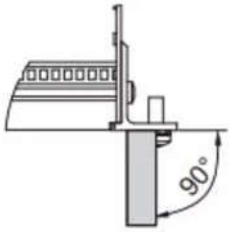

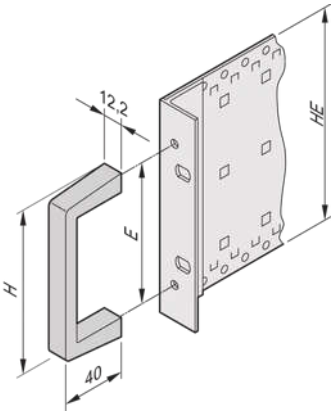

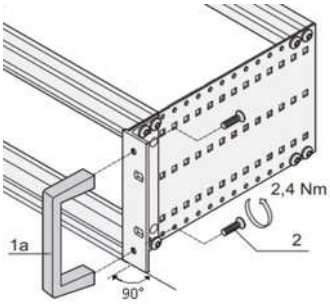

KEY FEATURES

- Static load-carrying capacity 30 kg/pair
- Bolted from rear

PRODUCT ATTRIBUTES

- Product Type: Handle
- Works With: Subracks
- Handle Type: Straight

Rack Height: 3 U

Material: Aluminum

Color: Silver

Package Quantity: 1

Torque: 2.4 N·m

ADDITIONAL PRODUCT DETAILS

The handle can be assembled to a subrack or 19" front panel. Available with clear or black anodized surface. Handles will be bolted from the rear side.

Please order assembly part kit separately.

Please take into consideration that deliveries may be carried out in the stated SPQs (SPQ, e.g. 5 pieces, 10 pieces, 50 pieces, etc.). Differing order quantities (e.g. 2 pieces) may be changed to the next possible delivery quantity = Standard Pack Quantity.

CERTIFICATIONS



North America
All locations
+1.763.422.2661
Chat with us:
schroff.nvent.com

Europe
Straubenhardt, Germany
+49.7082.794.0
Betschdorf, France
+33.3.88.90.64.90
Warsaw, Poland
+48.22.209.98.35
Assago, Italy
+39.02.932.7141
Chat with us:
schroff.nvent.com

Asia
Shanghai, China
+86.21.2412.6943
Qingdao, China
+86.532.8771.6101
Singapore
+65.6768.5800
Shin-Yokohama, Japan
+81.45.476.0271
Chat with us:
schroff.nvent.com

Middle East & India
Dubai, United Arab Emirates
+971.4.378.1700
Bangalore, India
+91.80.6715.2001
Istanbul, Turkey
+90.216.250.7374
Chat with us:
schroff.nvent.com

nVent

Our powerful portfolio of brands:
nVent.com CADDY ERICO HOFFMAN RAYCHEM SCHROFF TRACER

© 2023 nVent. All nVent marks and logos are owned or licensed by nVent Services GmbH or its affiliates. All other trademarks are the property of their respective owners.

nVent reserves the right to change specifications without notice.