Electronic Hygrotherm ETF 012 Series



- **Temperature and humidity adjustable**
- **Wide voltage range**
- **Operating temperature down to -40°C**
- **High switching capacity**
- **Status indicator (LED)**

The electronic hygrotherm senses the ambient temperature and relative humidity in an enclosure with electric/electronic components and turns on a heater (or alternatively a fan) at either set point, helping prevent the formation of condensation in the enclosure. Due to its wide voltage range the hygrotherm can be utilised anywhere in the world. The LED integrated in the adjustment knob on the active controller is lit when the connected device is in operation.

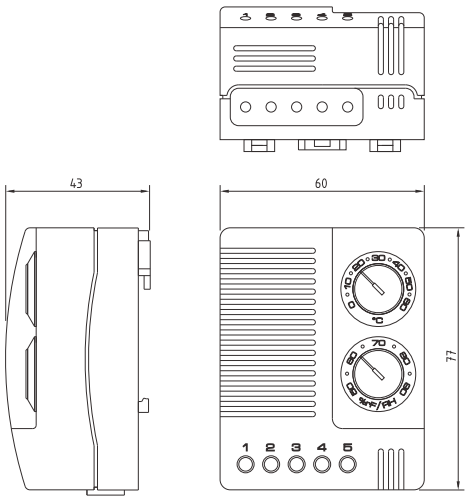

Technical Data

Switch difference (temperature)	2K (± 1K tolerance) at +25°C (+77°F) / 50% RH
Switch difference (humidity)	4% RH (± 1% tolerance) at +25°C (+77°F) / 50% RH
Reaction time (humidity)	approx. 5 sec.
Contact type	change-over contact (relay)
Service life	VDE: NO/NC > 15,000 cycles
	UL: NO/NC > 30,000 cycles
Max. switching capacity (relay	240VAC, 10 (1.6) A
output)	60VDC, 0,6 A[1]
Max. inrush current	30AAC for 10 sec.
Optical indicator	LED
Connection	5-pole terminal, clamping torque 0.5Nm max.:
	rigid wire 2.5mm²
	stranded wire (with wire end ferrule) 1.5mm²
Mounting	clip for 35mm DIN rail, EN 60715
Casing	plastic according to UL94 V-0, light grey
Dimensions	77 x 60 x 43mm
Weight	approx. 0.2kg
Fitting position	vertical
Operating / Storage temperature	-40 to +60°C (-40 to +140°F)
Operating / Storage humidity	max. 90% RH (non-condensing)
Protection type	IP20

[1] not UL confirmed

Connection diagram

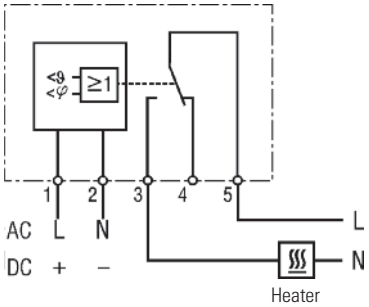

Example of connection

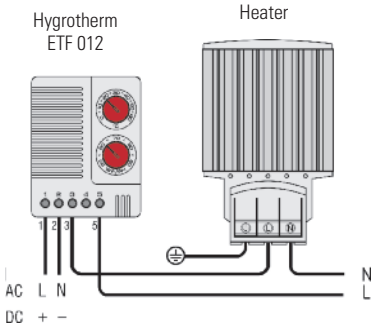

Art. No.	Operating voltage	Setting range temperature	Setting range humidity	Approvals
01230.0-00	100-240VAC, 50/60 Hz (min. 90VAC, max. 265VAC)	0 to +60°C	50 to 90% RH	VDE + UL File No. E164102
01230.9-00	100-240VAC, 50/60 Hz (min. 90VAC, max. 265VAC)	+32 to +140°F	50 to 90% RH	VDE + UL File No. E164102
01230.1-00	24-48VDC (min. 20VDC, max. 60VDC)	0 to +60°C	50 to 90% RH	VDE + UL File No. E164102

Specifications are subject to change without notice. Errors and omissions excepted. Suitability of this product for its intended use and any associated risks must be determined by the end customer/ buyer in its final application. 14.01.2013