SCALA NON IMPEGNATIVA (DO NOT SCALE)	METRIC	PROIEZIONE EUROPEA (EUROPEAN PROJECTION)
DIMENSIONI IN / DIMENSIONS IN mm		

Sezione A-A
(Section)

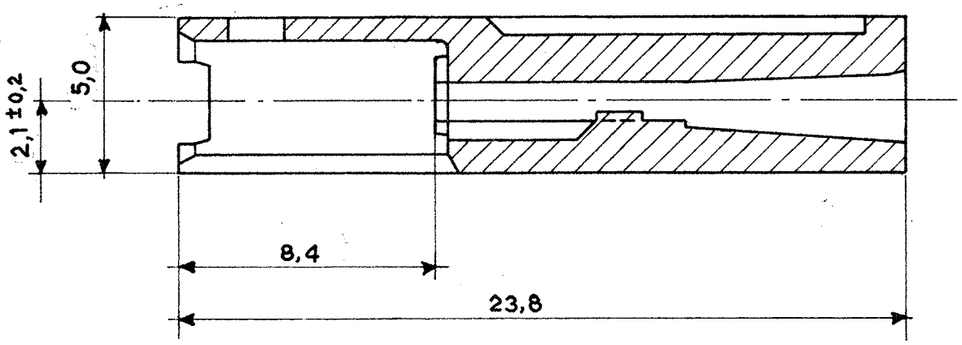

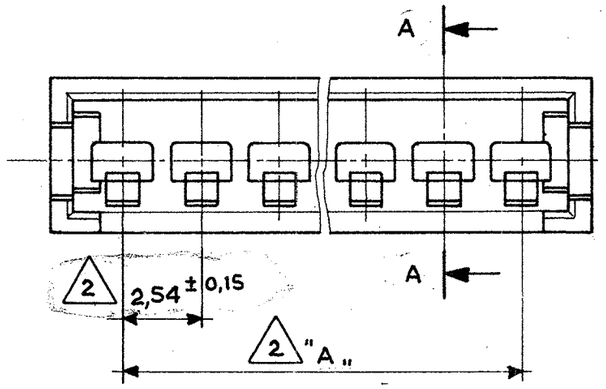

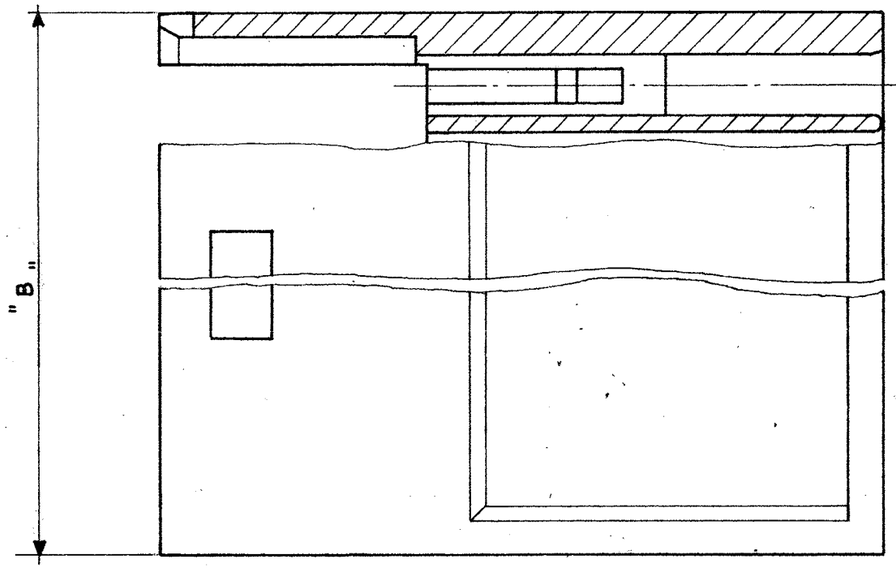

Note: (Notes)

1. Noryl (UL94-V1) Colore Nero (Black Colour).
2. Tolleranza non Cumulativa. (Non-Cumulative Tolerance.)
3. PA 6.6 15% g.f. masterizzato ROSSO (PA 6.6 15% g.f. masterized - RED)

Nº Pos.	Part. Number	Dim. "A"	Dim. "B"			Mat.
4	284072-1	7,62	12,5			3
2	284071-1	2,54	7,4			
22	280636	53,34	58,2			
15	280635	35,56	40,4			
12	280634	27,94	32,8			
10	280633	22,86	27,7			
9	280632	20,32	25,1			1
8	280631	17,78	22,6			
6	280630	12,70	17,5			
4	280629	7,62	12,5			
2	280628	2,54	7,4			

REV. (REV. LTR.)	REVISIONI (REVISION RECORD)	DIS. (DR)	DATA (DATE)
H2	RELEASED FOR PRODUCTION P/Ns 284071-1 & 284072-1 ETOO-01[illegible]	[illegible]	26/11/94
H1	Aggiunti P/Ns 284071-1 e 284072-1 Added P/Ns per EC-ETOO-04[illegible]	[illegible]	10 Nov 9[illegible]
2	Revised note 1	[illegible]	10.7.91
1	Revised and Redrawn	E.B.	29.9.86

~~FINITURA / COLORE (FINISH / COLOUR)~~ ~~MATERIALE (MATERIAL)~~ ~~NUMERO (PART NUMBER)~~

CUSTOMER DWG. FOR REFERENCE ONLY

DISEGNO PER CLIENTE SOLO PER RIFERIMENTO

~~THIS DRAWING IS UNPUBLISHED~~ RELEASE FOR PUBLICATION ~~19~~

© COPYRIGHT 19 BY AMP INCORPORATED, HARRISBURG, PA ALL INTERNATIONAL RIGHT RESERVED AMP PRODUCTS MAY BE COVERED BY U.S. AND FOREIGN PATENT AND/OR PATENT PENDING

TOLLERANZE: SE NON DIVERSAMENTE SPECIFICATO (TOLERANCES UNLESS OTHERWISE SPECIFIED) ± 0,3

ANGOLI (ANGLES) ± 2°

DIAM. ISOLANTE (INS. DIA. RANGE) —

RANGO FILO (WIRE RANGE) —

SCALA (SCALE) 5:1

AMP ITALIA S.p.A. Corso F.lli Cervi, 15 COLLEGNO (TORINO)

DIS. (DR.) Bassano 29th 9-86

CONT. (CHK) [signature]

APP. (APP.)

DESCRIZIONE (DESCRIPTION) AMP MODU II Pin Housing, Single Row, Crimp Snap-In.

LOC.	SIZE	NUMERO (DWG NO)	REV.	FOGLIO (SHEET)
I	A3	280628 C - (Master Dwg.)	H2	1 DI (OF) 1

DISTRIBUZIONE (PRINT DIST.)

AMP-ITA 7523 - 5/82