Pluggable interface relays CR-M
Miniature relays
Data sheet

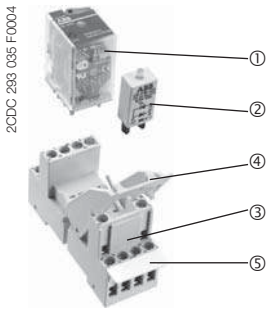

CR-M

① Interface relay
② Pluggable function module
③ Socket
④ Holder
⑤ Marker

Features

- Standard miniature relays with mechanical status indication
- 12 different supply voltages:
  DC versions: 12 V, 24 V, 48 V, 60 V, 110 V, 125 V, 220 V
  AC versions: 24 V, 48 V, 60 V, 110 V, 120 V, 230 V
- Output: 2 c/o (SPDT) contacts (12 A), 3 c/o (SPDT) contacts (10 A) or 4 c/o (SPDT) contacts (6 A)
- Available with or without LED
- 4-c/o (SPDT) version optionally equipped with gold contacts, LED and free wheeling diode
- Integrated test button for manual actuation and locking of output contacts (blue =DC, orange = AC) that can be removed if necessary
- Cadmium-free contact material
- Suited for logical and standard sockets
- Width on socket: 27 mm
- Pluggable function modules: reverse polarity protection/free wheeling diode, LED indication, RC elements, overvoltage protection, time modules

Approvals

	UL508	(except 60 V DC and 125 V DC devices with gold contacts)
	CAN/CSA C22.2 No.14	(except devices with gold contacts)
	CAN/CSA C22.2 No.14	(except 60 V DC and 125 V DC devices)
	VDE	(except 125 V DC devices)
	GOST	
	Lloyds Register	(only devices with 4 c/o (SPDT) contacts)
	CCC	
	RMRS	

Marks

CE CE

Order data

Type	Rated control supply voltage U_s	Order code
Interface relays without LED 2 c/o (SPDT) contacts: 250 V, 12 A		
CR-M012DC2	12 V DC	1SVR 405 611 R4000
CR-M024DC2	**24 V DC**	**1SVR 405 611 R1000**
CR-M048DC2	48 V DC	1SVR 405 611 R6000
CR-M060DC2	60 V DC	1SVR 405 611 R4200
CR-M110DC2	110 V DC	1SVR 405 611 R8000
CR-M125DC2	125 V DC	1SVR 405 611 R8200
CR-M220DC2	220 V DC	1SVR 405 611 R9000
CR-M024AC2	**24 V AC**	**1SVR 405 611 R0000**
CR-M048AC2	48 V AC	1SVR 405 611 R5000
CR-M110AC2	**110 V AC**	**1SVR 405 611 R7000**
CR-M120AC2	120 V AC	1SVR 405 611 R2000
CR-M230AC2	**230 V AC**	**1SVR 405 611 R3000**

Bold printed products = stocked products. Packing unit = 10 pieces.

Pluggable interface relays CR-M
Miniature relays
Data sheet

Type	Rated control supply voltage U_s	Order code
Interface relays without LED 3 c/o (SPDT) contacts: 250 V, 10 A		
CR-M012DC3	12 V DC	1SVR 405 612 R4000
CR-M024DC3	**24 V DC**	**1SVR 405 612 R1000**
CR-M048DC3	48 V DC	1SVR 405 612 R6000
CR-M060DC3	60 V DC	1SVR 405 612 R4200
CR-M110DC3	110 V DC	1SVR 405 612 R8000
CR-M125DC3	125 V DC	1SVR 405 612 R8200
CR-M220DC3	220 V DC	1SVR 405 612 R9000
CR-M024AC3	**24 V AC**	**1SVR 405 612 R0000**
CR-M048AC3	48 V AC	1SVR 405 612 R5000
CR-M060AC3	60 V AC	1SVR 405 612 R5200
CR-M110AC3	**110 V AC**	**1SVR 405 612 R7000**
CR-M120AC3	120 V AC	1SVR 405 612 R2000
CR-M230AC3	**230 V AC**	**1SVR 405 612 R3000**
Interface relays without LED 4 c/o (SPDT) contacts: 250 V, 6 A		
CR-M012DC4	12 V DC	1SVR 405 613 R4000
CR-M024DC4	**24 V DC**	**1SVR 405 613 R1000**
CR-M048DC4	48 V DC	1SVR 405 613 R6000
CR-M060DC4	60 V DC	1SVR 405 613 R4200
CR-M110DC4	110 V DC	1SVR 405 613 R8000
CR-M125DC4	125 V DC	1SVR 405 613 R8200
CR-M220DC4	220 V DC	1SVR 405 613 R9000
CR-M024AC4	**24 V AC**	**1SVR 405 613 R0000**
CR-M048AC4	48 V AC	1SVR 405 613 R5000
CR-M110AC4	**110 V AC**	**1SVR 405 613 R7000**
CR-M120AC4	120 V AC	1SVR 405 613 R2000
CR-M230AC4	**230 V AC**	**1SVR 405 613 R3000**
Interface relays with LED 2 c/o (SPDT) contacts: 250 V, 12 A		
CR-M012DC2L	12 V DC	1SVR 405 611 R4100
CR-M024DC2L	**24 V DC**	**1SVR 405 611 R1100**
CR-M048DC2L	48 V DC	1SVR 405 611 R6100
CR-M060DC2L	60 V DC	1SVR 405 611 R4300
CR-M110DC2L	110 V DC	1SVR 405 611 R8100
CR-M125DC2L	125 V DC	1SVR 405 611 R8300
CR-M220DC2L	220 V DC	1SVR 405 611 R9100
CR-M024AC2L	**24 V AC**	**1SVR 405 611 R0100**
CR-M048AC2L	48 V AC	1SVR 405 611 R5100
CR-M110AC2L	**110 V AC**	**1SVR 405 611 R7100**
CR-M120AC2L	120 V AC	1SVR 405 611 R2100
CR-M230AC2L	**230 V AC**	**1SVR 405 611 R3100**

Bold printed products = stocked products. Packing unit = 10 pieces.

Type	Rated control supply voltage U_s	Order code
Interface relays with LED, 3 c/o (SPDT) contacts: 250 V, 10 A		
CR-M012DC3L	12 V DC	1SVR 405 612 R4100
CR-M024DC3L	**24 V DC**	**1SVR 405 612 R1100**
CR-M048DC3L	48 V DC	1SVR 405 612 R6100
CR-M060DC3L	60 V DC	1SVR 405 612 R4300
CR-M110DC3L	110 V DC	1SVR 405 612 R8100
CR-M125DC3L	125 V DC	1SVR 405 612 R8300
CR-M220DC3L	220 V DC	1SVR 405 612 R9100
CR-M024AC3L	**24 V AC**	**1SVR 405 612 R0100**
CR-M048AC3L	48 V AC	1SVR 405 612 R5100
CR-M110AC3L	**110 V AC**	**1SVR 405 612 R7100**
CR-M120AC3L	120 V AC	1SVR 405 612 R2100
CR-M230AC3L	**230 V AC**	**1SVR 405 612 R3100**
Interface relays with LED, 4 c/o (SPDT) contacts: 250 V, 6 A		
CR-M012DC4L	12 V DC	1SVR 405 613 R4100
CR-M024DC4L	**24 V DC**	**1SVR 405 613 R1100**
CR-M048DC4L	48 V DC	1SVR 405 613 R6100
CR-M060DC4L	60 V DC	1SVR 405 613 R4300
CR-M110DC4L	110 V DC	1SVR 405 613 R8100
CR-M125DC4L	125 V DC	1SVR 405 613 R8300
CR-M220DC4L	220 V DC	1SVR 405 613 R9100
CR-M024AC4L	**24 V AC**	**1SVR 405 613 R0100**
CR-M048AC4L	48 V AC	1SVR 405 613 R5100
CR-M110AC4L	**110 V AC**	**1SVR 405 613 R7100**
CR-M120AC4L	120 V AC	1SVR 405 613 R2100
CR-M230AC4L	**230 V AC**	**1SVR 405 613 R3100**
Interface relays with LED and free wheeling diode, 4 c/o (SPDT) contacts: 250 V, 6 A		
CR-M024DC4LD	24 V DC	1SVR 405 614 R1100
Interface relays with gold contacts, 4 c/o (SPDT) contacts: 250 V, 6 A		
CR-M024DC4G	**24 V DC**	**1SVR 405 618 R1000**
CR-M024AC4G	**24 V AC**	**1SVR 405 618 R0000**
CR-M110AC4G	**110 V AC**	**1SVR 405 618 R7000**
CR-M230AC4G	**230 V AC**	**1SVR 405 618 R3000**
Interface relays with LED and gold contacts, 4 c/o (SPDT) contacts: 250 V, 6 A		
CR-M012DC4LG	12 V DC	1SVR 405 618 R4100
CR-M024DC4LG	**24 V DC**	**1SVR 405 618 R1100**
CR-M048DC4LG	48 V DC	1SVR 405 618 R6100
CR-M060DC4LG	60 V DC	1SVR 405 618 R4300
CR-M110DC4LG	110 V DC	1SVR 405 618 R8100
CR-M125DC4LG	125 V DC	1SVR 405 618 R8300
CR-M220DC4LG	220 V DC	1SVR 405 618 R9100
CR-M024AC4LG	**24 V AC**	**1SVR 405 618 R0100**
CR-M048AC4LG	48 V AC	1SVR 405 618 R5100
CR-M110AC4LG	**110 V AC**	**1SVR 405 618 R7100**
CR-M120AC4LG	120 V AC	1SVR 405 618 R2100
CR-M230AC4LG	**230 V AC**	**1SVR 405 618 R3100**

Bold printed products = stocked products. Packing unit = 10 pieces.

Type	Rated control supply voltage U_s	Order code
Interface-relays with gold contacts, LED and free wheeling diode, 4 c/o (SPDT) contacts: 250 V, 6 A		
CR-M012DC4LDG	**12 V DC**	**1SVR 405 618 R4400**
CR-M024DC4LDG	**24 V DC**	**1SVR 405 618 R1400**

Ordering data - Accessories

Function modules

Type	Rated control supply voltage U_s	Version	Order code
Diode - Reverse polarity protection			
CR-P/M 22	**6-230 V DC**	**A1+, A2-**	**1SVR 405 651 R0000**
Diode and LED - Reverse polarity protection			
CR-P/M 42	**6-24 V DC**	**red, A1+, A2-**	**1SVR 405 652 R0000**
CR-P/M 42V	**6-24 V DC**	**green, A1+, A2-**	**1SVR 405 652 R1000**
CR-P/M 42B	**24-60 V DC**	**red, A1+, A2-**	**1SVR 405 652 R4000**
CR-P/M 42BV	**24-60 V DC**	**green, A1+, A2-**	**1SVR 405 652 R4100**
CR-P/M 42C	**110-230 V DC**	**red, A1+, A2-**	**1SVR 405 652 R9000**
CR-P/M 42CV	**110-230 V DC**	**green, A1+, A2-**	**1SVR 405 652 R9100**
RC element - Arc elemination			
CR-P/M 52B	**6-24 V AC**		**1SVR 405 653 R0000**
CR-P/M 52D	**24-60 V AC**		**1SVR 405 653 R4000**
CR-P/M 52C	**110-230 V AC**		**1SVR 405 653 R1000**
Diode and LED			
CR-P/M 62	**6-24 V AC/DC**	**red, for DC: A1+, A2-**	**1SVR 405 654 R0000**
CR-P/M 62V	**6-24 V AC/DC**	**green, for DC: A1+, A2-**	**1SVR 405 654 R1000**
CR-P/M 62E	**24-60 V AC/DC**	**red, for DC: A1+, A2-**	**1SVR 405 654 R4000**
CR-P/M 62EV	**24-60 V AC/DC**	**green, for DC: A1+, A2-**	**1SVR 405 654 R4100**
CR-P/M 92	**110-230 V AC/DC**	**red, for DC: A1+, A2-**	**1SVR 405 654 R0100**
CR-P/M 92V	**110-230 V AC/DC**	**green, for DC: A1+, A2-**	**1SVR 405 654 R1100**
Varistor and LED - Overvoltage protection			
CR-P/M 62C	**6-24 V AC/DC**	**red, for DC: A1+, A2-**	**1SVR 405 655 R0000**
CR-P/M 62CV	**6-24 V AC/DC**	**green, for DC: A1+, A2-**	**1SVR 405 655 R1000**
CR-P/M 62D	**24-60 V AC/DC**	**red, for DC: A1+, A2-**	**1SVR 405 655 R4000**
CR-P/M 62DV	**24-60 V AC/DC**	**green, for DC: A1+, A2-**	**1SVR 405 655 R4100**
CR-P/M 92C	**110-230 V AC/DC**	**red, for DC: A1+, A2-**	**1SVR 405 655 R0100**
CR-P/M 92CV	**110-230 V AC/DC**	**green, for DC: A1+, A2-**	**1SVR 405 655 R1100**
Varistor - Overvoltage protection			
CR-P/M 72	**24 V AC**		**1SVR 405 656 R0000**
CR-P/M 72A	**115 V AC**		**1SVR 405 656 R1000**
CR-P/M 82	**230 V AC**		**1SVR 405 656 R2000**

Time modules

Type			Order code
Time module			
CR-P/M T1	**12-24 V AC/DC**	**ON-delay**	**1SVR 405 657 R0000**
CR-P/M T2	**12-24 V AC/DC**	**Impulse-ON**	**1SVR 405 657 R0100**

Bold printed products = stocked products. Packing unit = 10 pieces.

Pluggable interface relays CR-M
Miniature relays
Data sheet

All CR-P/M modules - except time modules CR-P/M T... - can be plugged onto all CR-P or CR-M sockets. The time modules CR-P/M T... can be plugged onto the following sockets only: CR-PLSx, CR-PLC and CR-M2LS, CR-M3LS, CR-M4LS, CR-M2LC, CR-M4LC.

Sockets

Type	Version	Connection	Order code
Logical sockets			
CR-M2LS	**for 2 c/o (SPDT) contacts**	**screw**	**1SVR 405 651 R1100**
CR-M3LS	**for 3 c/o (SPDT) contacts**	**screw**	**1SVR 405 651 R2100**
CR-M4LS	**for 2 or 4 c/o (SPDT) contacts**	**screw**	**1SVR 405 651 R3100**
CR-M2LC	**for 2 c/o (SPDT) contacts**	**spring**	**1SVR 405 651 R1200**
CR-M4LC	**for 2 or 4 c/o (SPDT) contacts**	**spring**	**1SVR 405 651 R3200**
Standard sockets			
CR-M2SS	**for 2 c/o (SPDT) contacts**	**screw**	**1SVR 405 651 R1000**
CR-M3SS	**for 3 c/o (SPDT) contacts**	**screw**	**1SVR 405 651 R2000**
CR-M4SS	**for 2 or 4 c/o (SPDT) contacts**	**screw**	**1SVR 405 651 R3000**
CR-M2SF	**for 2 c/o (SPDT) contacts**	**fork type screw**	**1SVR 405 651 R1300**
CR-M4SF	**for 2 or 4 c/o (SPDT) contacts**	**fork type screw**	**1SVR 405 651 R3300**
Accessories for CR-M sockets			
CR-MH	**Plastic holder**		**1SVR 405 659 R1000**
CR-MH1	**Metall holder**		**1SVR 405 659 R1100**
CR-MJ	**Jumper bar for sockets with screw clamps**		**1SVR 405 658 R6000**

Bold printed products = stocked products. Packing unit = 10 pieces.

Application

Interface relays are electromechanic and electronic input and output modules for electrical isolation, levelling, noise suppression or signal amplification between control unit and process.

Operating mode

When power supply is applied, the output contacts get closed. When control supply voltage is switched off, the contacts fall back into their starting position. Manual operation and locking of the output relays is possible via the integrated test button.

Connection diagrams

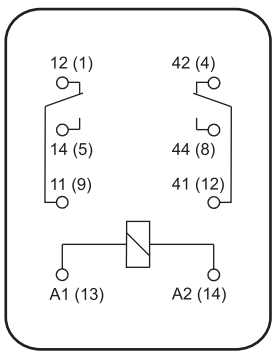

CR-M with 2 c/o (SPDT) contacts

A1-A2 Control supply voltage
11-12/14 Relay outputs
41-42/44

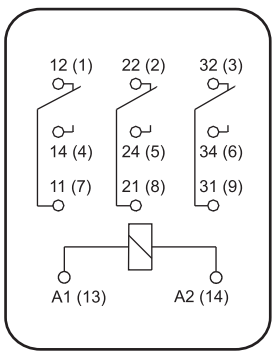

CR-M with 3 c/o (SPDT) contacts

A1-A2 Control supply voltage
11-12/14 Relay outputs
21-22/24
31-32/34

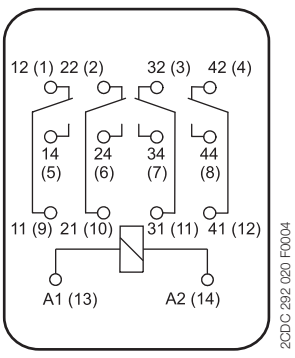

CR-M with 4 c/o (SPDT) contacts

A1-A2 Control supply voltage
11-12/14 Relay outputs
21-22/24
31-32/34
41-42/44

Technical data

Input circuit - Coil data A1-A2

	Rated control supply voltage U_s	Rated frequency	Make voltage (at 20 °C)	Maxium voltage (at 55 °C)	Break voltage	Rated power	Coil resistance (at 20 °C)	Tolerance of coil resistance
DC coils	12 V DC	-	9.6 V DC	13.2 V DC	≥ 0.1 U_s	0.9 W	160 Ω	± 10 %
	24 V DC	-	19.2 V DC	26.4 V DC	≥ 0.1 U_s	0.9 W	640 Ω	± 10 %
	48 V DC	-	38.4 V DC	52.8 V DC	≥ 0.1 U_s	0.9 W	2600 Ω	± 10 %
	60 V DC	-	48.0 V DC	66.0 V DC	≥ 0.1 U_s	0.9 W	4000 Ω	± 10 %
	110 V DC	-	88.0 V DC	121.0 V DC	≥ 0.1 U_s	0.9 W	13600 Ω	± 10 %
	125 V DC	-	100.0 V DC	137.5 V DC	≥ 0.1 U_s	0.9 W	16000 Ω	± 10 %
	220 V DC	-	176.0 V DC	242.0 V DC	≥ 0.1 U_s	0.9 W	54000 Ω	± 10 %
AC coils	24 V AC	50 / 60 Hz	19.2 V AC	26.4 V AC	≥ 0.2 U_s	1.6 VA	158 Ω	± 10 %
	48 V AC	50 / 60 Hz	38.4 V AC	52.8 V AC	≥ 0.2 U_s	1.6 VA	640 Ω	± 10 %
	60 V AC	50 / 60 Hz	48,0 V AC	66,0 V AC	≥ 0,2 U_s	1,6 VA	930 Ω	± 10 %
	110 V AC	50 / 60 Hz	88.0 V AC	121.0 V AC	≥ 0.2 U_s	1.6 VA	3450 Ω	± 10 %
	120 V AC	50 / 60 Hz	96.0 V AC	132.0 V AC	≥ 0.2 U_s	1.6 VA	3770 Ω	± 10 %
	230 V AC	50 / 60 Hz	184.0 V AC	253.0 V AC	≥ 0.2 U_s	1.6 VA	16100 Ω	± 10 %

Type			**CR-M...2**	**CR-M...3**	**CR-M...4**
Output circuits			**11-12/14 21-22/24**	**11-12/14 21-22/24 31-32/34**	**11-12/14 21-22/24 31-32/34 41-42/44**
Kind of output			Relay, 2 c/o (SPDT)	Relay, 3 c/o (SPDT)	Relay, 4 c/o (SPDT)
Contact material			AgNi	AgNi	AgNi AgNi/Au 5 µm
Rated operational voltage U_e (VDE 0110, IEC 60947-1)			250 V		
Min. switching voltage			5 V		
Max. switching voltage		DC	250 V DC		
		AC	250 V AC		
Min. switching current			5 mA (AgNi), 2 mA (AgNi/Au)		
Conventional free-air thermal current I_{th}			12 A	10 A	6 A
Rated operational current (IEC 60947-5-1)	AC12 (resistive)	230 V	12 A	10 A	6 A
	AC15 (inductive)	230 V	1.5 A	1.5 A	1 A
	DC12 (resistive)	24 V	12 A	10 A	6 A
	DC13 (inductive)	24 V	8 A	8 A	6 A
Min. switching power			0.3 W (AgNi), 0.1 W (AgNi/Au)		
Max. switching power		AC1	3000 VA	2500 VA	1500 VA
Contact resistance			≤ 100 mΩ		
Max. switching capacity		rated load AC1	1200 switching cycles/h		
		without load	18000 switching cycles/h		
Lifetime		mechanical	> 2 x 10^7 switching cycles		
		electrical AC1 (resistive)	> 10^5 switching cycles		
			(12 A, 250 V)	(10 A, 250 V)	(6 A, 250 V)
		cos φ	see Reduction factor F		
Response time			typ. 13 ms (DC), typ. 10 ms (AC)		
Release time			typ. 3 ms (DC), typ. 8 ms (AC)		

Pluggable interface relays CR-M
Miniature relays
Data sheet

Type			CR-M...2	CR-M...3	CR-M...4
Isolation data					
Rated insulation voltage			250 V AC		
Insulation class			C250 / B250		
Rated impulse withstand voltage U_{imp} between	coil and contacts		2.5 kV AC		
	open contacts		1.5 kV AC		
	c/o (SPDT) contacts		2.5 kV AC		2 kV AC
Clearance	betw. coil and contacts		≥ 2.5 mm		≥ 1.6 mm
Creepage distance	betw. coil and contacts		≥ 4 mm		≥ 3.2 mm
Overvoltage category			III		II
Pollution degree			3		2
General data					
Dimensions (W x H x D) when mounted			21.2 x 27.5 x 35.6 mm		
Weight			35 g (0.077 lb)		
Mounting			on socket (see accessories)		
Mounting position			any		
Degree of protection			IP 40		
Electrical data					
Connection			by socket		
Environmental data					
Ambient temperature range	operation	DC	-40...+70 °C		
		AC	-40...+55 °C		
		storage	-40...+85 °C		
Vibration resistance (10-150 Hz)		n/o contact	5 g		
		n/c contact	5 g		
Shock resistance		n/o contact	10 g		
		n/c contact	5 g		
Standards					
Product standard			EN 60810-1, EN 60255-23, IEC 61810-7		
Low Voltage Directive			73/23/EEC		

Technical diagrams

Load limit curves - Maximum switching power at resistive DC load

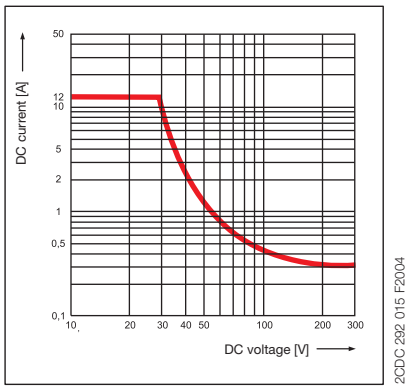

Versions with 2 c/o (SPDT) contacts (CR-M ... 2)

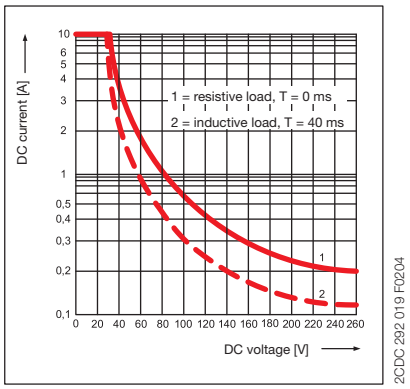

Versions with 3 c/o (SPDT) contacts (CR-M ... 3)

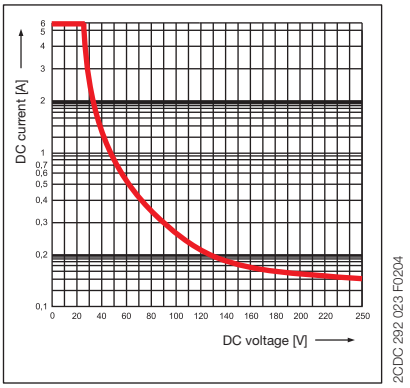

Versions with 4 c/o (SPDT) contacts (CR-M ... 4)

Load limit curves - Electrical lifetime at resistive AC load

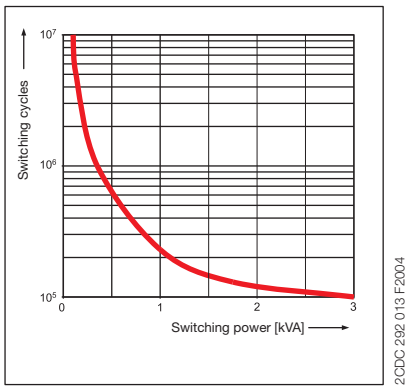

2CDC 292 013 F2004

Versions with 2 c/o (SPDT) contacts (CR-M ... 2)

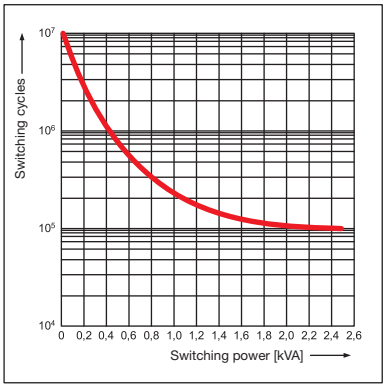

2CDC 292 018 F2004

Versions with 3 c/o (SPDT) contacts (CR-M ... 3)

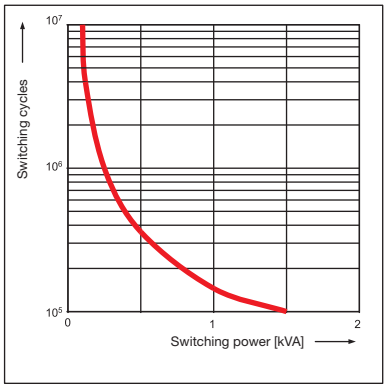

2CDC 292 022 F2004

Versions with 4 c/o (SPDT) contacts (CR-M ... 4)

Reduction factor F at inductive AC load

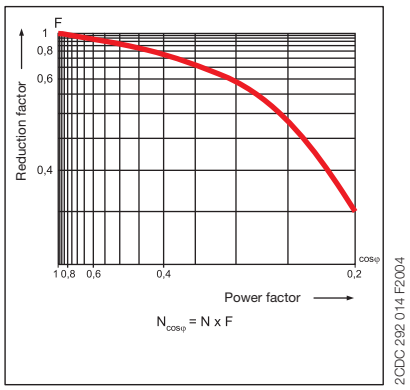

2CDC 292 014 F2004

Dimensions in mm

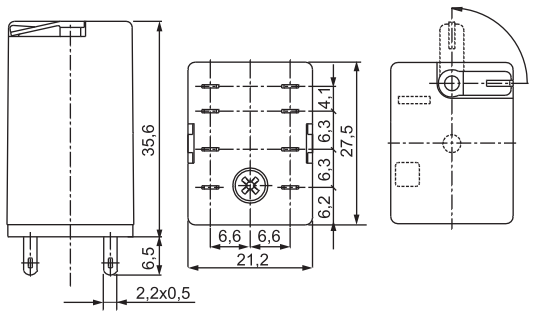

2CDC 292 012 F0004

Versions with 2 c/o (SPDT) contacts (CR-M ... 2)

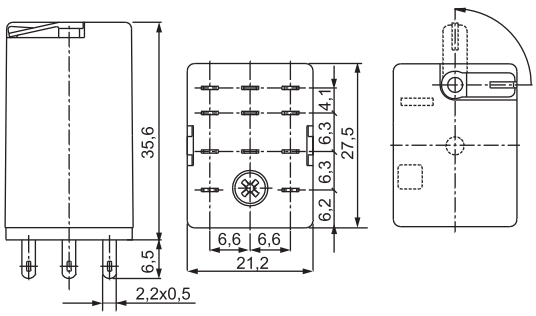

2CDC 292 017 F0004

Versions with 3 c/o (SPDT) contacts (CR-M ... 3)

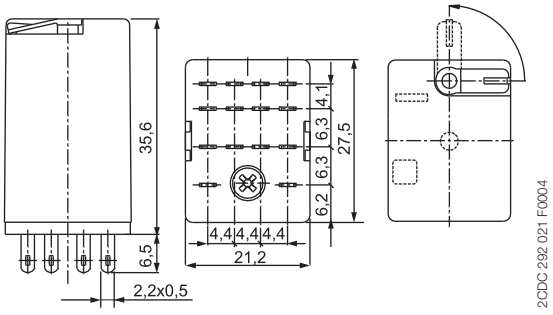

2CDC 292 021 F0004

Versions with 4 c/o (SPDT) contacts (CR-M ... 4)

Further documentation

Document title	Document type	Document number
Sockets CR-M	Data sheet	2CDC 117 005 D020x
Jumper bar CR-MJ	Data sheet	2CDC 117 015 D020x
Pluggable function modules CR-P/M	Data sheet	2CDC 117 007 D020x
Pluggable time modules CR-PM T	Data sheet	2CDC 117 011 D020x

As part of the on-going product improvement, ABB reserves the right to modify the characteristics of the products described in this document. The information given is non-contractual.

Technische Änderungen jederzeit vorbehalten. Alle Angaben dienen ausschließlich der Produktbeschreibung und sind nicht als zugesicherte Eigenschaften im Rechtssinne aufzufassen.

For further details please contact (www.abb.com/contacts) the ABB company marketing these products in your country.

Druckschrift-Nummer: 2CDC 1 07 2 02 2 04 (06/2009)

ABB STOTZ-KONTAKT GmbH

Eppelheimer Strasse 82, 69123 Heidelberg, Deutschland
Postfach 10 16 80, 69006 Heidelberg, Deutschland
Internet http://www.abb.de/stotz-kontakt → Schalt- und Steuerungstechnik

Die Adresse Ihrer lokalen Vertriebsorganisation finden Sie auf der ABB-Hompage unter
http://www.abb.com/contacts → Low Voltage Products and Systems