Data sheet

Voltage monitoring relays CM-ESS.1
For single-phase AC/DC voltages

The CM-ESS.1 is an electronic voltage monitoring relay that provides reliable monitoring of voltages as well as detection of phase loss.

All devices are available with two different terminal versions. You can choose between the proven screw connection technology (double-chamber cage connection terminals) and the completely tool-free Easy Connect Technology (Push-in terminals).



Characteristics

- Monitoring of DC and AC voltages (3-600 V)
- TRMS measuring principle
- One device includes 4 measuring ranges
- Over- or undervoltage monitoring configurable
- Hysteresis adjustable (3-30 %)
- 3 supply voltage versions
- Precise adjustment by front-face operating controls
- Screw connection technology or Easy Connect Technology available
- Housing material for highest fire protection classification UL 94 V-0
- Tool-free mounting on DIN rail as well as demounting
- 1 c/o (SPDT) contact
- 22.5 mm (0.89 in) width
- 3 LEDs for status indication

Approvals

UL 508, CAN/CSA C22.2 No.14
GL (pending)
GOST
CB Scheme
CCC
RMRS

Marks

CE
C-Tick

Order data

Voltage monitoring relays

Type	Rated control supply voltage	Connection technology	Measuring ranges	Order code
CM-ESS.1P	24-240 V AC/DC	Push-in terminals	3-30 V, 6-60 V, 30-300 V, 60-600 V	1SVR 740 830 R0300
	110-130 V AC			1SVR 740 831 R0300
	220-240 V AC			1SVR 740 831 R1300
CM-ESS.1S	24-240 V AC/DC	Screw type terminals	3-30 V, 6-60 V, 30-300 V, 60-600 V	1SVR 730 830 R0300
	110-130 V AC			1SVR 730 831 R0300
	220-240 V AC			1SVR 730 831 R1300

Accessories

Type	Description	Order code
ADP.01	Adapter for screw mounting	1SVR 430 029 R0100
MAR.12	Marker label for devices with DIP switches	1SVR 730 006 R0000
COV.11	Sealable transparent cover	1SVR 730 005 R0100

Connection technology

Maintenance free Easy Connect Technology with Push-in terminals

Type designation CM-xxS.yyP

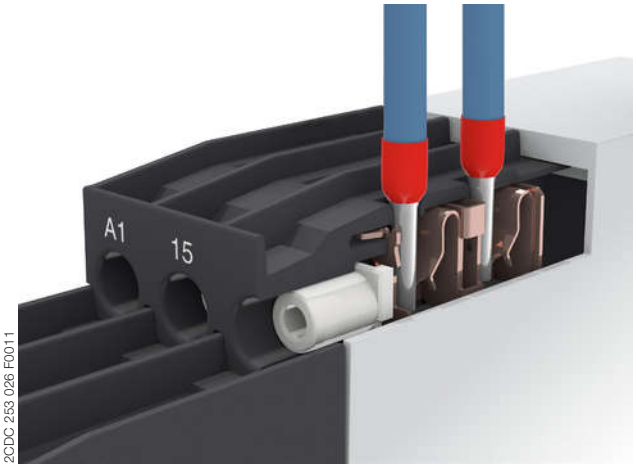

2CDC 253 026 F0011

Push-in terminals

- Tool-free connection of rigid and flexible wires with wire end ferrule according to DIN 46228-1-A, DIN 46228-4-E
  Wire size: 2 x 0.5-1.5 mm², (2 x 20 - 16 AWG)
- Easy connection of flexible wires without wire end ferrule by opening the terminals
- No retightening necessary
- One operation lever for opening both connection terminals
- For triggering the lever and disconnecting of wires you can use the same tool (Screwdriver according to DIN ISO 2380-1 Form A 0.8 x 4 mm (0.0315 x 0.157 in), DIN ISO 8764-1 PZ1 ø 4.5 mm (0.177 in))
- Constant spring force on terminal point independent of the applied wire type, wire size or ambient conditions (e. g. vibrations or temperature changes)
- Opening for testing the electrical contacting
- Gas-tight

Approved screw connection technology with double-chamber cage connection terminals

Type designation CM-xxS.yyS

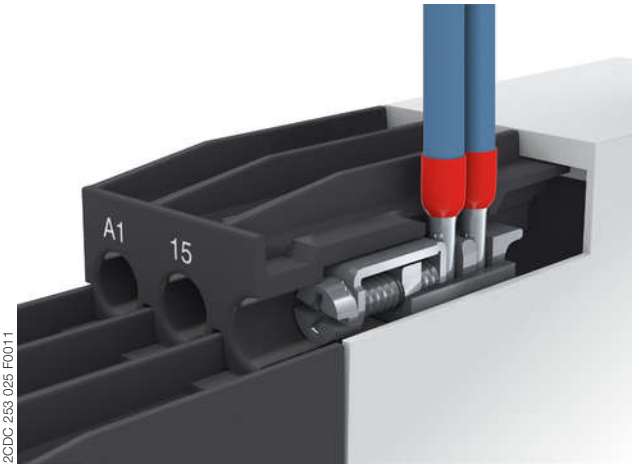

2CDC 253 025 F0011

Double-chamber cage connection terminals

- Terminal spaces for different wire sizes:
  fine-strand with/without wire end ferrule:
  1 x 0.5-2.5 mm² (2 x 20 - 14 AWG),
  2 x 0.5-1.5 mm² (2 x 20 - 16 AWG)
  rigid:
  1 x 0.5-4 mm² (1 x 20 - 12 AWG),
  2 x 0.5-2.5 mm² (2 x 20 - 14 AWG)
- One screw for opening and closing of both cages
- Pozidrive screws for pan- or crosshead screwdrivers according to DIN ISO 2380-1 Form A 0.8 x 4 mm (0.0315 x 0.157 in), DIN ISO 8764-1 PZ1 ø 4.5 mm (0.177 in)

Both the Easy Connect Technology with Push-in terminals and screw connection technology with double-chamber cage connection terminals have the same connection geometry as well as terminal position.

Functions

Operating controls

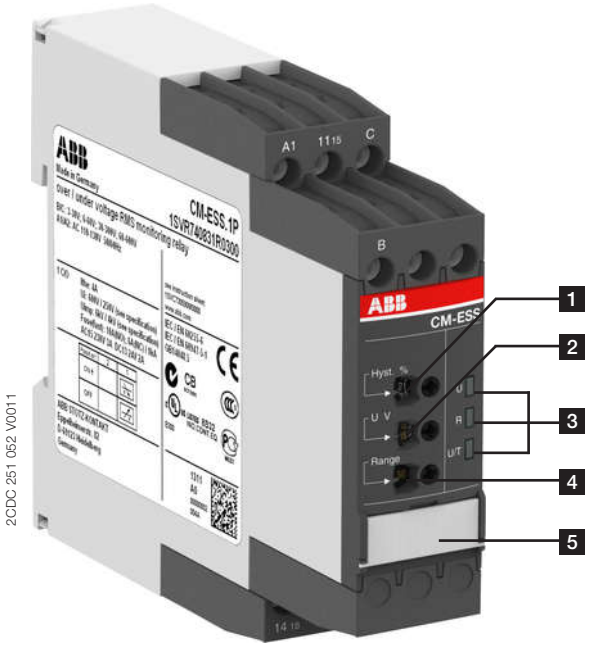

1 **Adjustment of the hysteresis**

2 **Adjustment of the threshold value**

3 **Indication of operational states**

U/T: green LED – control supply voltage

R: yellow LED – relay status

U: red LED – over- / undervoltage

4 **Adjustment of the measuring range**

5 **DIP switches (see DIP switch functions)**

Application

The voltage monitoring relays CM-ESS.1 are designed for use in single-phase AC and/or DC systems for over- or undervoltage monitoring as well as detection of phase loss. The devices are available with different supply voltage ranges and work according to the open-circuit principle.

Operating mode

The CM-ESS.1 have 1 c/o (SPDT) contact and include 4 measuring ranges: 3-30 V, 6-60 V, 30-300 V and 60-600 V.

The units are adjusted with front-face operating controls. The selection of over- or undervoltage monitoring is made with a DIP switch. Potentiometers, with direct reading scale, allow the adjustment of the threshold value U and of the hysteresis %. The hysteresis % is adjustable within a range of 3 to 30 % of the threshold value.

Function diagrams

Overvoltage monitoring

The voltage to be monitored (measured value) is applied to terminals B-C. The control supply voltage applied to terminals A1-A2 is displayed by the glowing green LED.

If the measured value exceeds the adjusted threshold value, the output relay energizes and the red LED (overvoltage) and the yellow LED (relay energized) glow.

If the measured value drops below the threshold value minus the adjusted hysteresis, the output relay de-energizes and the red and yellow LEDs turn off.

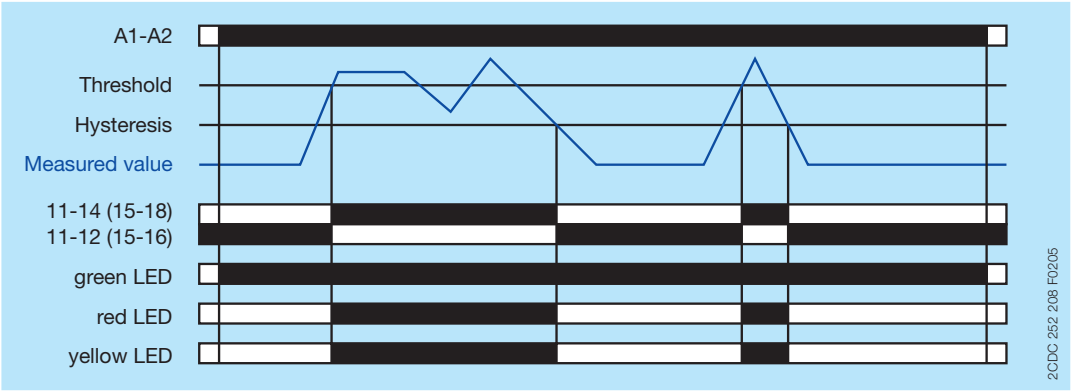

Undervoltage monitoring

The voltage to be monitored (measured value) is applied to terminals B-C. The control supply voltage applied to terminals A1-A2 is displayed by the glowing green LED.

If the measured value drops below the adjusted threshold value, the output relay energizes, the red LED flashes (undervoltage) and the yellow LED (relay energized) glows.

If the measured value exceeds the threshold value plus the adjusted hysteresis, the output relay de-energizes and the red and yellow LEDs turn off.

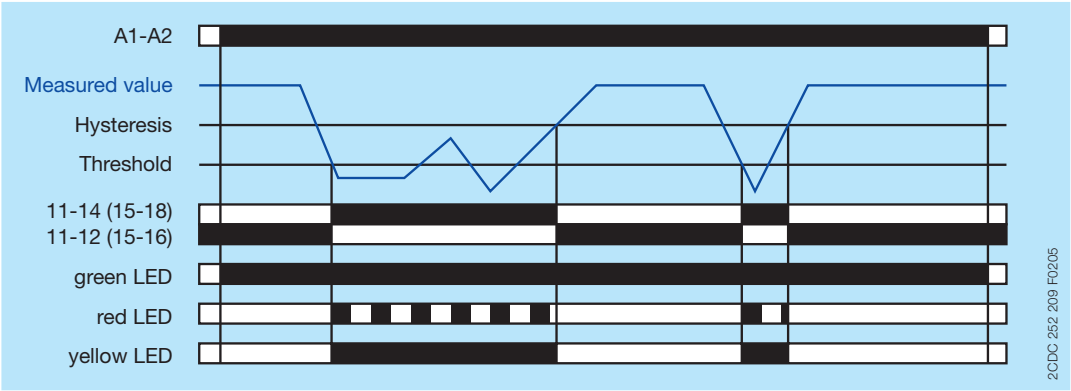

Electrical connection

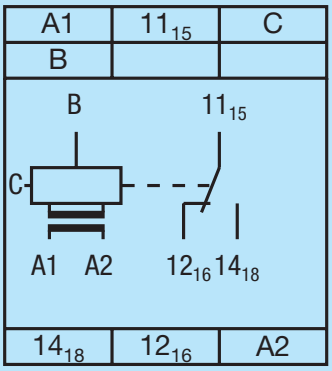

2CDC 252 206 F0005

A1-A2	Rated control supply voltage
B-C	Measuring ranges: 3-30 V, 6-60 V, 30-300 V, 60-600 V
11_{15}-12_{16}/14_{18}	Output contact - open-circuit principle

Connection diagram

DIP switches

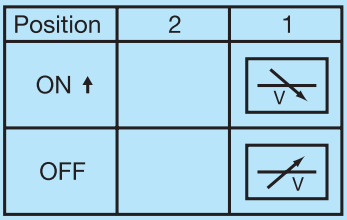

2CDC 252 275 F0005

1	ON	Undervoltage monitoring
	OFF	Overvoltage monitoring

OFF = Default

Technical data

Data at T_a = 25 °C and rated values, unless otherwise indicated

Input circuits

Supply circuit		**A1-A2**		
Rated control supply voltage U_s		110-130 V AC	220-240 V AC	24-240 V AC/DC
Rated control supply voltage U_s tolerance		-15...+10 %		
Rated frequency		50/60 Hz		50/60 Hz or DC
Typical current / power consumption	24 V DC	-	-	30 mA / 0.75 W
	115 V AC	24 mA / 2.6 VA	-	17 mA / 1.9 VA
	230 V AC	-	12 mA / 2.6 VA	11 mA / 2.6 VA
Power failure buffering time		20 ms		
Transient overvoltage protection		varistors		

Measuring circuit		**B-C**
Monitoring function		over- or undervoltage monitoring configurable
Measuring method		TRMS measuring principle
Measuring inputs	terminal connection	B-C
	measuring range	3-30 V, 6-60 V, 30-300 V, 60-600 V
	input resistance	600 kΩ
	pulse overload capacity t < 1 s	800 V
	continuous capacity	660 V
Threshold value		adjustable within the indicated measuring range
Tolerance of the adjusted threshold value		10 % of the range end value
Hysteresis related to the threshold value		3-30 % adjustable
Measuring signal frequency range		DC / 15 Hz - 2 kHz
Rated measuring signal frequency range		DC / 50-60 Hz
Maximum response time	AC	80 ms
	DC	120 ms
Accuracy within the rated control supply voltage tolerance		ΔU ≤ 0.5 %
Accuracy within the temperature range		ΔU ≤ 0.06 % / °C
Transient overvoltage protection		varistors

Timing circuit	
Time delay T_V	none
Repeat accuracy (constant parameters)	±0.07 % of full scale
Tolerance of the adjusted time delay	-
Accuracy within the rated control supply voltage tolerance	-
Accuracy within the temperature range	-

User interface

Indication of operational states		
Control supply voltage	U/T: green LED	⎍: control supply voltage applied
Measured value	U: red LED	⎍: overvoltage ⎍⎍: undervoltage
Relay status	R: yellow LED	⎍: output relay energized

Output circuits

Kind of output	11-12/14	relay, 1 c/o (SPDT) contact
Operating principle		open-circuit principle (output relay energizes if the measured value exceeds / falls below the adjusted threshold value)
Contact material		AgNi
Rated operational voltage U_e (VDE 0110, IEC/EN 60947-1)		250 V
Minimum switching voltage / Minimum switching current		24 V / 10 mA
Maximum switching voltage / Maximum switching current		250 V AC / 4 A AC
Rated operational current I_e (IEC/EN 60947-5-1)	AC12 (resistive) at 230 V	4 A
	AC15 (inductive) at 230 V	3 A
	DC12 (resistive) at 24 V	4 A
	DC13 (inductive) at 24 V	2 A
AC rating (UL 508)	utilization category (Control Circuit Rating Code)	B 300
	max. rated operational voltage	300 V AC
	max. continuous thermal current at B 300	5 A
	max. making/breaking apparent power at B 300	3600/360 VA
Mechanical lifetime		30 x 10^6 switching cycles
Electrical lifetime	AC12, 230 V, 4 A	0.1 x 10^6 switching cycles
Maximum fuse rating to achieve short-circuit protection	n/c contact	6 A fast-acting
	n/o contact	10 A fast-acting

General data

MTBF			on request	
Duty time			100 %	
Dimensions (W x H x D)		product dimensions	22.5 x 85.6 x 103.7 mm (0.89 x 3.37 x 4.08 in)	
		packaging dimensions	97 x 109 x 30 mm (3.82 x 4.29 x 1.18 in)	
Weight			**Screw connection technology**	**Easy Connect Technology (Push-in)**
	Net weight	Version 24-240 V AC/DC	0.135 kg (0.298 lb)	0.126 kg (0.278 lb)
		Version 110-130 V AC	0.164 kg (0.362 lb)	0.155 kg (0.342 lb)
		Version 220-240 V AC	0.164 kg (0.362 lb)	0.155 kg (0.342 lb)
	Gross weight	Version 24-240 V AC/DC	0.157 kg (0.346 lb)	0.148 kg (0.326 lb)
		Version 110-130 V AC	0.186 kg (0.410 lb)	0.178 kg (0.392 lb)
		Version 220-240 V AC	0.186 kg (0.410 lb)	0.178 kg (0.392 lb)
Mounting			DIN rail (IEC/EN 60715), snap-on mounting without any tool	
Mounting position			any	
Material of housing			UL 94 V-0	
Degree of protection		housing	IP50	
		terminals	IP20	

Electrical connection

		Screw connection technology	Easy Connect Technology (Push-in)
Wire size	fine-strand with(out) wire end ferrule	1 x 0.5-2.5 mm² (1 x 20-14 AWG) 2 x 0.5-1.5 mm² (2 x 20-16 AWG)	2 x 0.5-1.5 mm² (2 x 20-16 AWG)
	rigid	1 x 0.5-4 mm² (1 x 20-12 AWG) 2 x 0.5-2.5 mm² (2 x 20-14 AWG)	2 x 0.5-1.5 mm² (2 x 20-16 AWG)
Stripping length		8 mm (0.32 in)	
Tightening torque		0.6 - 0.8 Nm (5.31 - 7.08 lb.in)	-

Environmental data

Ambient temperature ranges	operation	-20...+60 °C
	storage	-40...+85 °C
Damp heat, cyclic (IEC 60068-2-30)		55 °C, 6 cycle
Vibration, sinusoidal (IEC/EN 60255-21-1)		Class 2
Shock (IEC/EN 60255-21-2)		Class 2

Isolation data

Rated insulation voltage U_i (VDE 0110, IEC/EN 60947-1, IEC/EN 60255-5)	supply / measuring circuit / output	600 V
	supply / output 1 / output 2	250 V
Rated impulse withstand voltage U_{imp} (IEC/EN 60947-1, IEC/EN 60255-5)	supply / measuring circuit / output	6 kV 1.2/50 µs
	supply / output 1 / output 2	4 kV 1.2/50 µs
Test voltage between all isolated circuits (type test)	rated insulation voltage 250 V	2.0 kV, 50 Hz
	rated insulation voltage 600 V	2.5 kV, 50 Hz
Pollution degree (VDE 0110, IEC/EN 60664, IEC/EN 60255-5)		3
Overvoltage category (VDE 0110, IEC/EN 60664, IEC/EN 60255-5)		III

Standards

Product standard	IEC/EN 60255-6
Low Voltage Directive	2006/95/EC
EMC Directive	2004/108/EC
RoHS Directive	2002/95/EC

Electromagnetic compatibility

Interference immunity to		IEC/EN 61000-6-2
electrostatic discharge	IEC/EN 61000-4-2	Level 3
radiated, radio-frequency, electromagnetic field	IEC/EN 61000-4-3	Level 3
electrical fast transient / burst	IEC/EN 61000-4-4	Level 3
surge	IEC/EN 61000-4-5	Level 3
conducted disturbances, induced by radio-frequency fields	IEC/EN 61000-4-6	Level 3
Interference emission		IEC/EN 61000-6-3
high-frequency radiated	IEC/CISPR 22, EN 55022	Class B
high-frequency conducted	IEC/CISPR 22, EN 55022	Class B

Technical diagrams

Load limit curves

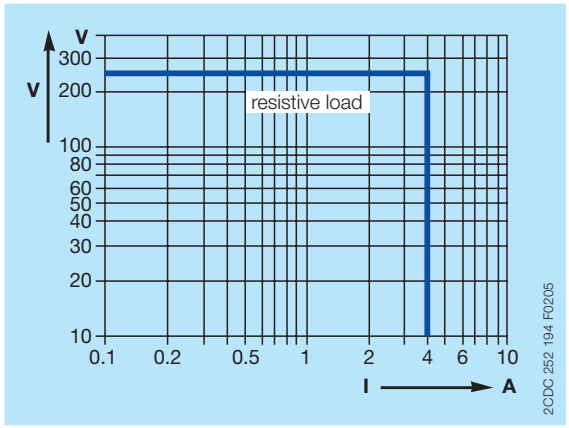

AC load (resistive)

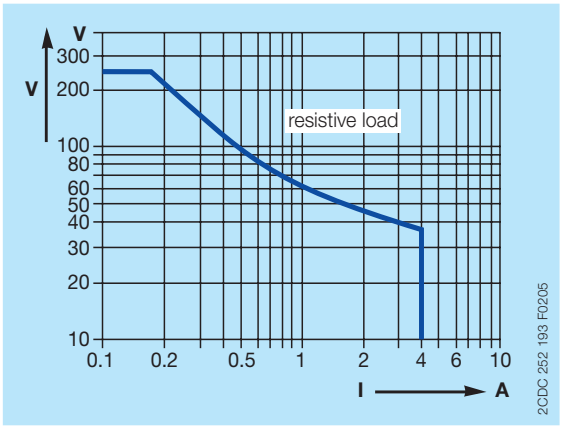

DC load (resistive)

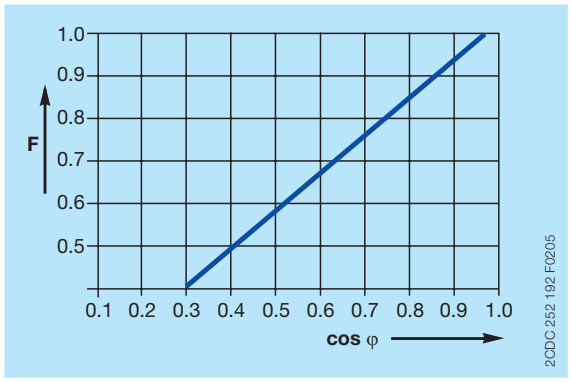

Derating factor F for inductive AC load

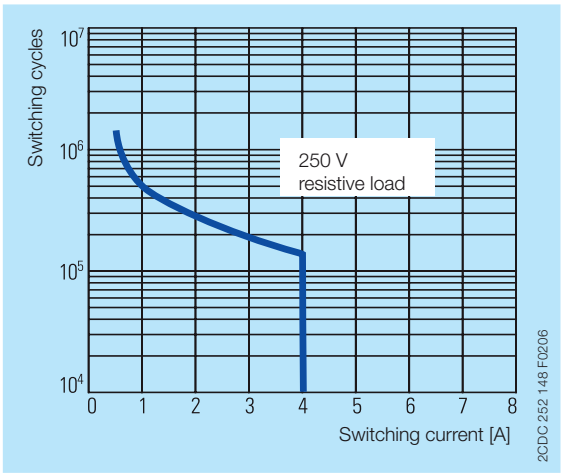

Contact lifetime

Dimensions

in **mm** and *inches*

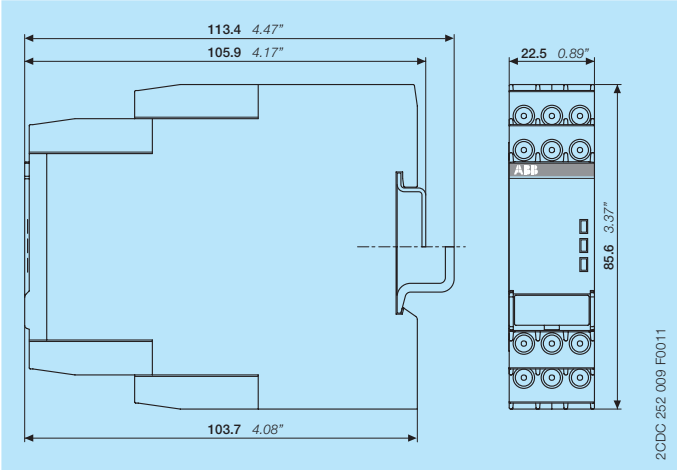

Accessories

in **mm** and *inches*

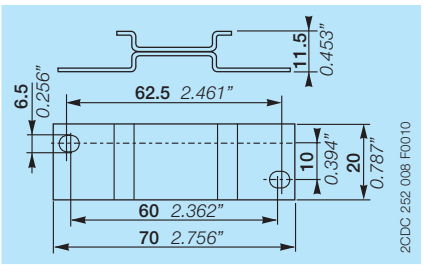

ADP.01 - Adapter for screw mounting

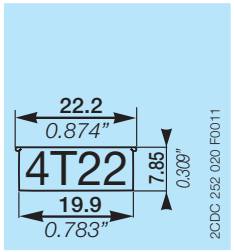

MAR.12 - Marker label for devices with DIP switches

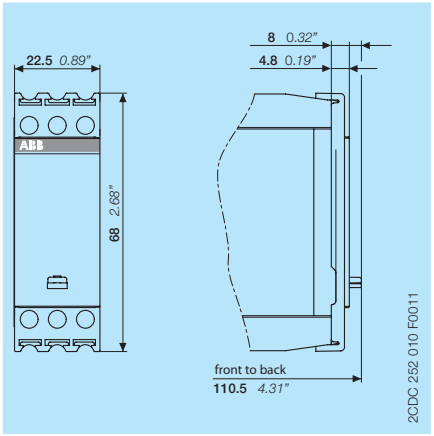

COV.11 - Sealable transparent cover

Further documentation

Document title	Document type	Document number
Electronic products and relays	Technical catalogue	2CDC 110 004 C020x
CM-ESS.1, CM-ESS.2	Instruction manual	1SVC 730 590 M0000

You can find the documentation on the internet at www.abb.com/lowvoltage -> Control Products -> Electronic Relays and Controls -> Single Phase Monitors

Contact us

ABB STOTZ-KONTAKT GmbH
P. O. Box 10 16 80
69006 Heidelberg, Germany
Phone: +49 (0) 6221 7 01-0
Fax: +49 (0) 6221 7 01-13 25
E-mail: info.desto@de.abb.com

You can find the address of your
local sales organisation on the
ABB home page
http://www.abb.com/contacts
-> Low Voltage Products and Systems

Document number 2CDC 112 171 D0201 (11.2011)

Note:
We reserve the right to make technical changes or modify the contents of this document without prior notice. With regard to purchase orders, the agreed particulars shall prevail. ABB AG does not accept any responsibility whatsoever for potential errors or possible lack of information in this document.

We reserve all rights in this document and in the subject matter and illustrations contained therein. Any reproduction, disclosure to third parties or utilization of its contents – in whole or in parts – is forbidden without prior written consent of ABB AG.

Copyright© 2011 ABB
All rights reserved