

Illuminated pushbutton actuator, flush, red 0, maintained

Part no. M22-DRL-R-X0
Catalog No. 216957
Eaton Catalog No. M22-DRL-R-X0Q

Delivery program

Product range			RMQ-Titan
Basic function			Illuminated pushbutton actuators
Single unit/Complete unit			Single unit
Design			Flush
			maintained
Button plate			
button plate			red
Button plate			
			inscribed
Degree of Protection			IP67, IP69K
Front ring			Bezel: titanium
Connection to SmartWire-DT			Yes, with SWD-RMQ connections
Actuator travel and actuation force as per DIN EN 60947-5-1, K.5.4.1			
Minimum force for positive opening	N		0
Front dimensions			29,7
Instructions			Stay-put/spring-return function can be changed on device

Technical data

General

Standards			IEC/EN 60947 VDE 0660
Lifespan, mechanical	Operations	x 10^6	> 1
Operating frequency	Operations/h		1800
Actuating force		n	5
Climatic proofing			Damp heat, constant, to IEC 60068-2-78 Damp heat, cyclic, to IEC 60068-2-30
Degree of Protection			IP67, IP69K
Ambient temperature			
Open		°C	-25 - +70
Mounting position			As required
Mechanical shock resistance		g	30 Shock duration 11 ms Sinusoidal according to IEC 60068-2-27

Design verification as per IEC/EN 61439

Technical data for design verification			
Rated operational current for specified heat dissipation	I_n	A	0
Heat dissipation per pole, current-dependent	P_{vid}	W	0
Equipment heat dissipation, current-dependent	P_{vid}	W	0
Static heat dissipation, non-current-dependent	P_{vs}	W	0
Heat dissipation capacity	P_{diss}	W	0
Operating ambient temperature min.		°C	-25

Operating ambient temperature max.	°C	70
IEC/EN 61439 design verification		
10.2 Strength of materials and parts		
10.2.2 Corrosion resistance		Meets the product standard's requirements.
10.2.3.1 Verification of thermal stability of enclosures		Meets the product standard's requirements.
10.2.3.2 Verification of resistance of insulating materials to normal heat		Meets the product standard's requirements.
10.2.3.3 Verification of resistance of insulating materials to abnormal heat and fire due to internal electric effects		Meets the product standard's requirements.
10.2.4 Resistance to ultra-violet (UV) radiation		Please enquire
10.2.5 Lifting		Does not apply, since the entire switchgear needs to be evaluated.
10.2.6 Mechanical impact		Does not apply, since the entire switchgear needs to be evaluated.
10.2.7 Inscriptions		Meets the product standard's requirements.
10.3 Degree of protection of ASSEMBLIES		Does not apply, since the entire switchgear needs to be evaluated.
10.4 Clearances and creepage distances		Meets the product standard's requirements.
10.5 Protection against electric shock		Does not apply, since the entire switchgear needs to be evaluated.
10.6 Incorporation of switching devices and components		Does not apply, since the entire switchgear needs to be evaluated.
10.7 Internal electrical circuits and connections		Is the panel builder's responsibility.
10.8 Connections for external conductors		Is the panel builder's responsibility.
10.9 Insulation properties		
10.9.2 Power-frequency electric strength		Is the panel builder's responsibility.
10.9.3 Impulse withstand voltage		Is the panel builder's responsibility.
10.9.4 Testing of enclosures made of insulating material		Is the panel builder's responsibility.
10.10 Temperature rise		Not applicable.
10.11 Short-circuit rating		Is the panel builder's responsibility. The specifications for the switchgear must be observed.
10.12 Electromagnetic compatibility		Is the panel builder's responsibility. The specifications for the switchgear must be observed.
10.13 Mechanical function		The device meets the requirements, provided the information in the instruction leaflet (IL) is observed.

Technical data ETIM 6.0

Low-voltage industrial components (EG000017) / Front element for push button (EC000221)		
Electric engineering, automation, process control engineering / Low-voltage switch technology / Command and alarm device / Front element for push-button actuators (ecl@ss8.1-27-37-12-10 [AKF028011])		
Colour button		Red
Number of command positions		1
Construction type lens		Round
Hole diameter	mm	22
Width opening	mm	0
Height meter opening	mm	0
Degree of protection (IP), front side		IP67
Type of button		Flat
Suitable for illumination		Yes
With protection cover		No
Labelled		Yes
Switching function latching		Yes
Spring-return		Yes
With front ring		Yes
Material front ring		Plastic
Colour front ring		Chrome

Approvals

Product Standards		IEC/EN 60947-5; UL 508; CSA-C22.2 No. 14-05; CSA-C22.2 No. 94-91; CE marking
UL File No.		E29184
UL Category Control No.		NKCR
CSA File No.		012528
CSA Class No.		3211-03

North America Certification			UL listed, CSA certified
Degree of Protection			UL/CSA Type 3R, 4X, 12, 13

Dimensions

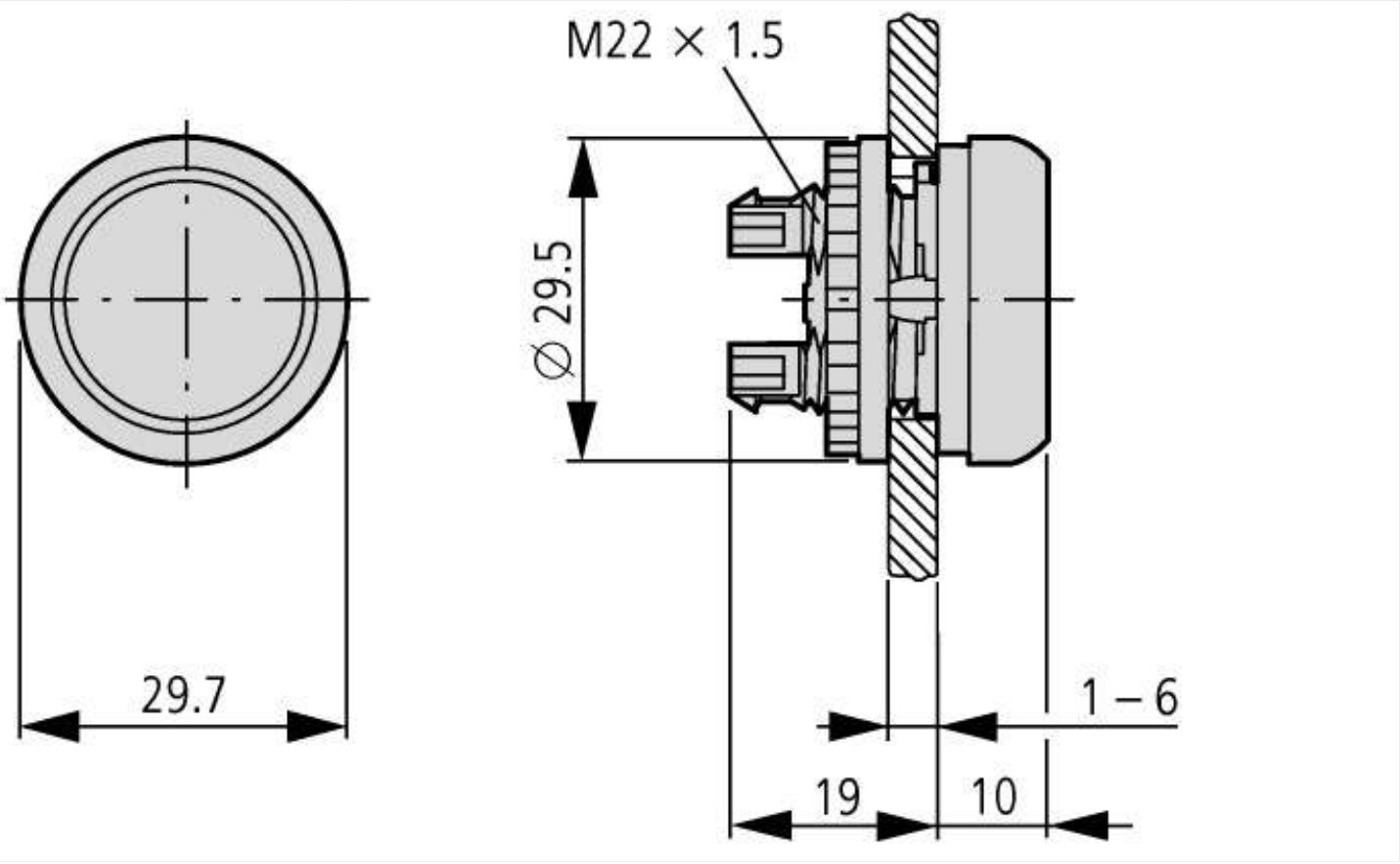

Additional product information (links)

IL04716002Z (AWA1160-1745) RMQ-Titan System	
IL04716002Z (AWA1160-1745) RMQ-Titan System	ftp://ftp.moeller.net/DOCUMENTATION/AWA_INSTRUCTIONS/IL04716002Z2017_01.pdf

© 06/2017 by Eaton Industries GmbH