Product datasheet

Specifications



inductive sensor XS8 40x40x70 - PBT - Sn40 mm - 12..48VDC - M12

XS8C2A4DAM12

Main

Range of product	Telemecanique Inductive proximity sensors XS
Series name	General purpose
Sensor type	Inductive proximity sensor
Device application	-
Sensor name	XS8
Sensor design	Form 40 x 40 x 70
Size	70 mm
Body type	Fixed
Detector flush mounting acceptance	Non flush mountable
Material	Plastic
Enclosure material	PBT
Type of output signal	Discrete
Wiring technique	2-wire
[Sn] nominal sensing distance	40 mm
Discrete output function	1 NO
Output circuit type	DC
Electrical connection	Male connector M12, 4 pins
[Us] rated supply voltage	12...48 V DC with reverse polarity protection
Switching capacity in mA	1.5...100 mA with overload and short-circuit protection
IP degree of protection	IP67 conforming to IEC 60529 IP65 conforming to IEC 60529 IP69K conforming to DIN 40050

Complementary

Detection face	5 positions turret head
Front material	PBT
Operating zone	0…32 mm
Differential travel	3...15% of Sr
Repeat accuracy	<= 3% of Sr

Disclaimer: This documentation is not intended as a substitute for and is not to be used for determining suitability or reliability of these products for specific user applications

Status LED	Output state: 1 LED (yellow)
Supply voltage limits	10…58 V DC
Maximum residual current	0.6 mA open state
Switching frequency	<= 200 Hz
Maximum voltage drop	<4.2 V (closed)
Maximum delay first up	7.5 ms
Maximum delay response	1.4 ms
Maximum delay recovery	2.5 ms
Marking	CE
Height	40 mm
Length	40 mm
Width	70 mm
Net weight	0.149 kg

Environment

Product certifications	CCC CSA UL
Ambient air temperature for operation	-25…70 °C
Ambient air temperature for storage	-40…85 °C
Vibration resistance	25 gn amplitude = +/- 2 mm (f = 10…55 Hz) conforming to IEC 60068-2-6
Shock resistance	50 gn for 11 ms conforming to EN 60068-2-27

Packing Units

Unit Type of Package 1	PCE
Number of Units in Package 1	1
Package 1 Weight	151.0 g
Package 1 Height	4 cm
Package 1 width	4.4 cm
Package 1 Length	6.6 cm
Unit Type of Package 2	S01
Number of Units in Package 2	24
Package 2 Weight	3.798 kg
Package 2 Height	15 cm
Package 2 width	15 cm
Package 2 Length	40 cm

Offer Sustainability

Sustainable offer status	Green Premium product
REACh Regulation	REACh Declaration
EU RoHS Directive	Pro-active compliance (Product out of EU RoHS legal scope) EU RoHS Declaration
Mercury free	Yes
RoHS exemption information	Yes

Environmental Disclosure	Product Environmental Profile

Contractual warranty

Warranty	18 months

Product datasheet XS8C2A4DAM12

Dimensions Drawings

Dimensions

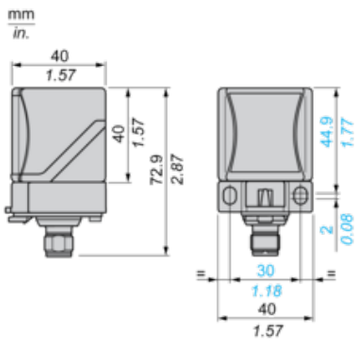

Product datasheet XS8C2A4DAM12

Mounting and Clearance

Mounting

Head Positions

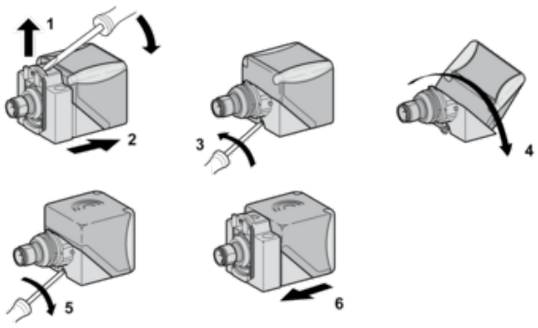

Setting-up Precautions

Minimum Mounting Distances (mm)

Side by Side

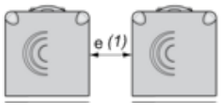

e (1) ≥ 160

Face to Face

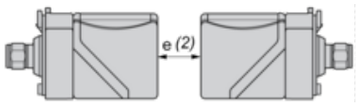

e (2) ≥ 320

Facing a Metal Object

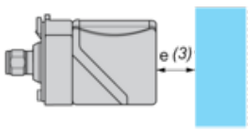

e (3) ≥ 120

Wiring Schemes

2-Wire NO

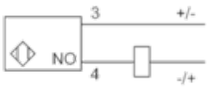

M12

