E1ZWI 60MIN 230V AC

Manufacturer data sheet: V.070

Time relay - impulse switch

Status: Available Data sheet created: 01.07.2025

Item Number: 110310 - **Serie:** Enya - **EAN:** 9008662005068



- Timer relay ENYA series
- Impulse switch
- off-delay 6 - 60 min
- autom. 3/4 wire detection
- supply voltage 230V AC
- 1 NO contact
- width 17.5mm
- Installation type

Description

Precise and reliable switching and control in industrial and commercial applications.

General information

Short description	Impulse switch with off-delay 230V AC
Item Number	110310
EAN	9008662005068
Main category	Timing Relays
Series	Enya
Type	E1ZWI 60MIN 230V AC
Design	Installation design
Supply	230V AC
Dimensions	17.5 x 87 x 65 mm

E1ZWI 60MIN 230V AC

Indicators

Supply/time lapse 1	Green LED U ON: Supply voltage applied
Relay state	Yellow LED ON/OFF: output relay position

Mechanical design

Housing material	made of self-extinguishing plastic
Housing - protection degree	IP40
Mounting	top hat rail TH 35 7,5-15 according to IEC 60715:2017 / EN 60715:2017
Terminals/connections	Touch-proof clamping yoke terminals according to DGUV 3 (Screwdriver PZ1 required)
Terminals - protection degree	IP20
Mounting position	any
Max. Tightening Torque	1 Nm
Terminal capacity	• 1 x 0.5 to 2.5mm² with/without ferrule • 1 x 4mm² without wire end ferrule • 2 x 0.5 to 1.5mm² with/without end sleeves • 2 x 2.5mm² flexible without ferrules

Supply circuit

Terminals/connections	L - N
Supply voltage a.c.	230 V
Supply voltage tolerance a.c.	-15% ... +10%
Rated frequency [Hz]	a.c. 48 ... 63 Hz
Rated consumption a.c.	1 W / 2 VA
Drop-out voltage	>30%
Overvoltage category	III (IEC 60664-1)
Rated surge voltage	4 kV

Output curcuit

Type	Relay
Contact 1	1 make contact
Terminals 1	L-18
Rated voltage	250 V a.c.
Einschaltspitzenstrom	80A (20ms)
Mechanical life	30 x 10^6 Switching cycles
Electrical life	10^5 Switching cycles at 16A 250 V at resistive load
Electrical life 2	80000 switching cycles at 1000 W 250 V at incandescent lamp load
Switching frequency	10A continuous current if the distance between the units is < 5mm. 16A continuous current if the distance between the units is > 5mm.

Control input

Control input	with potential
Terminals/connections	Pushbutton B1-N (3-wire circuit), Pushbutton B1-L (4-wire circuit)
Lamp load	max. 100mA parallel to the pushbuttons
Overload protection	yes, electronic

E1ZWI 60MIN 230V AC

Accuracy

Base accuracy	±5 % from full scale
Adjustment accuracy	<15 % from full scale
Repetition accuracy	<2 %
Temperature influence	<=1 %

Ambient conditions and general specifications

Storage temperature	-25 ... +70 °C
Transport temperature	-25 ... +70 °C
Pollution degree	2, pollution level can be increased by installation in suitable enclosures (according to IEC 60664-1)

Logistics

Minimum Quantity	1
Tariff Number	85364900
EAN	9008662005068
Country of Origin	AT
Product Weight (g)	68

Available declarations / conformities

EAC	✓
CE	Open document
REACH	Open document
WEEE	Open document
TSCA	Open document
RoHs	Open document
CMRT	Open document

CAD Files

STEP_E1_en.STEP	Download file

E1ZWI 60MIN 230V AC

Media & drawings



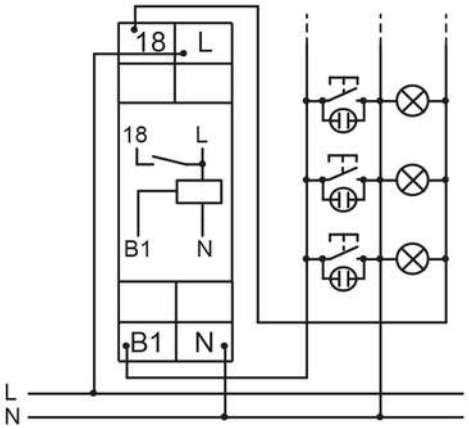

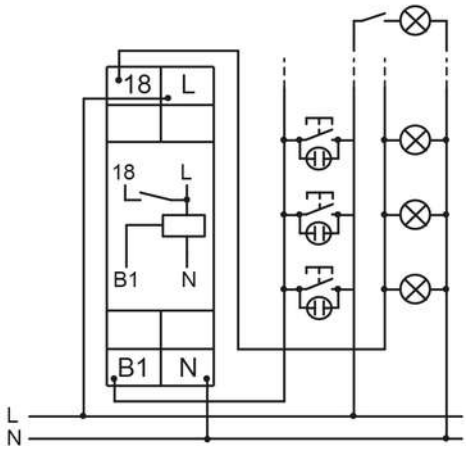

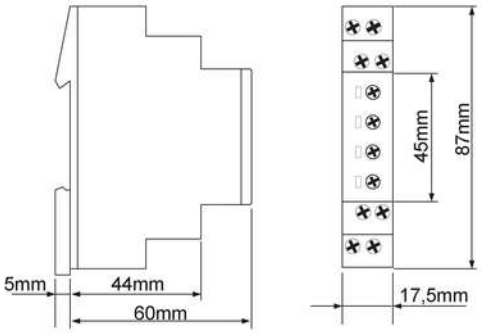

Dimensions

Tele Haase Steuergeräte Ges.m.b.H
Vorarlberger Allee 38
1230 Vienna
Austria

CALL US +43 / 1 / 614 74 - 0

ONLINE SUPPORT support@tele-haase.at

Changes and errors excepted