

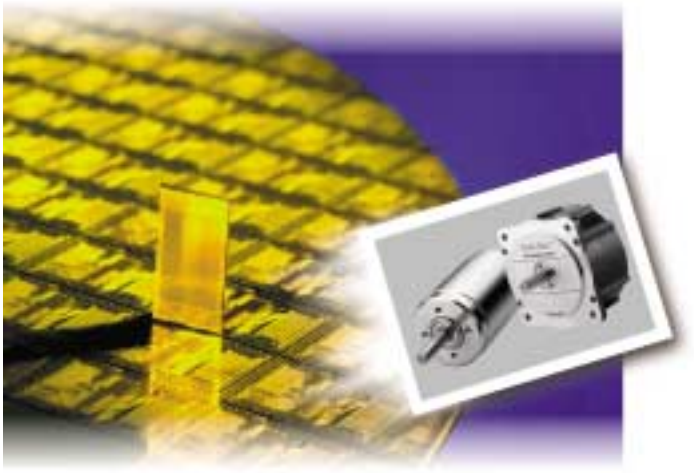

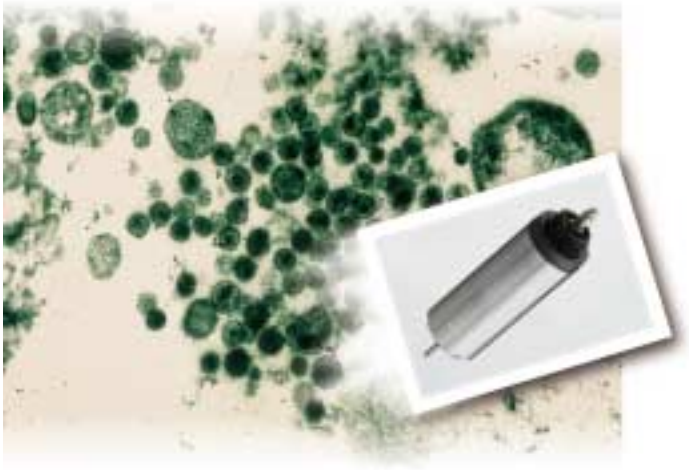



Miniature high performance motors & peripheral components for motion solutions

Portescap

MOVEMENT. SIGN OF LIFE

A Danaher Motion company

Portescap
provides the micromotor technology and know-how to meet your application requirements

The company was founded in 1931 in La Chaux-de-Fonds in Switzerland. Over the decades it has been recognised worldwide as a specialist in the field of high performance electromechanical drive systems. With 7 subsidiaries and 15 agencies in the major industrialised countries, Portescap offers an extended sales and service network.

The personal contact and the technical competence of the employees ensure that customer service remains today, as in the future, of prime importance.

Mechatronic specialist in the Research, Development and Engineering departments, combined with the traditional «Swiss made» quality standard, ensure satisfaction of the most demanding requirements.

Today, the Portescap team employs 600 people around the world. Extensive training and personal involvement along with a genuine team spirit guarantee the customer the optimum motion solution.

The majority of the escap® products are designed, engineered and manufactured at the parent company in La Chaux-de-Fonds, in the canton of Neuchâtel. The Marly/ Fribourg production centre is mainly devoted to manufacturing motors derived from the disc magnet technology and brushless motor.
The Portescap company is approved to ISO 9001.









Portescap
A Danaher Motion company

When it comes to leading edge motion control applications, Portescap has a wealth of experience and innovative products to meet your most demanding requirements.

We offer extensive prototype manufacturing facilities staffed by experienced engineers to assist you with your application-specific requirements.

Together, the companies that form Danaher Motion are the best solution for your application.

Système de Management Certifié Portescap SQS Rég. No 10508 ISO 9001

© Portescap

D.C. Motors

The ironless rotor motor technology

A state-of-the-art motor line
The escap® D.C. motor results from an original concept based on an ironless rotor, combined with a commutation system using either precious metals or a carbon/ copper combination.

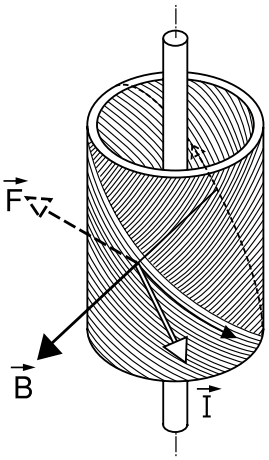

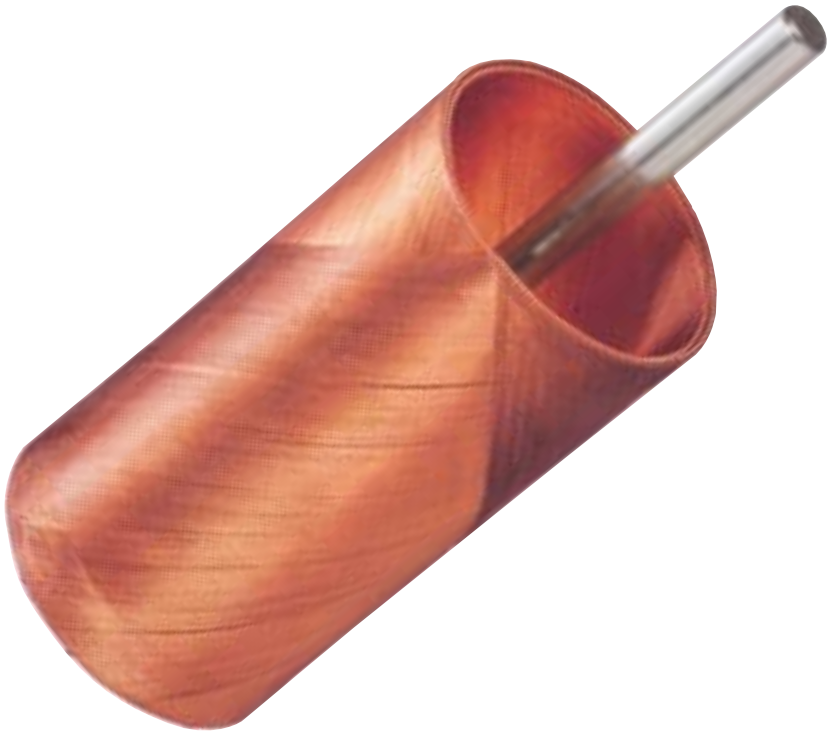

Concept detail	Motor characteristics	Advantages for the application
Ironless rotor	Low moment of inertia	**High acceleration Ideal for incremental motion Linear speed-torque function Insensitive to shocks**
	No hysteresis and eddy current losses	**High efficiency, low losses from friction only. Ideal for battery operation**
	No magnetic saturation	**High peak torques without the risk of demagnetisation**
Central stator magnet	High power per size and per weight	**Ideal for portable or small equipment or requiring small dimensions**
Small sized bearings	Low viscous damping	**High peak speeds, very low speed dependent losses, low starting voltage**
Precious metal commutation system	Low friction, little electrical noise	**Low losses and wear, low electromagnetic interference**
Rotafente™ series Copper-graphite commutation	High current densities may be commutated	**High continuous and peak torques without risk of demagnetising the motor. Very long life. Ideal for chopper drivers**
	Rated rotor temperature up to 155°C	**Continuous torque is exceptionally high for the motor size, reducing the weight, dimensions, and the cooling system**
	Very compact commutation system	**Excellent resistance to shocks and vibration**
	High torque to inertia ratio	**High acceleration, short mechanical time constant**

© Portescap

DC motor torque range

Technical specifications, see page 43

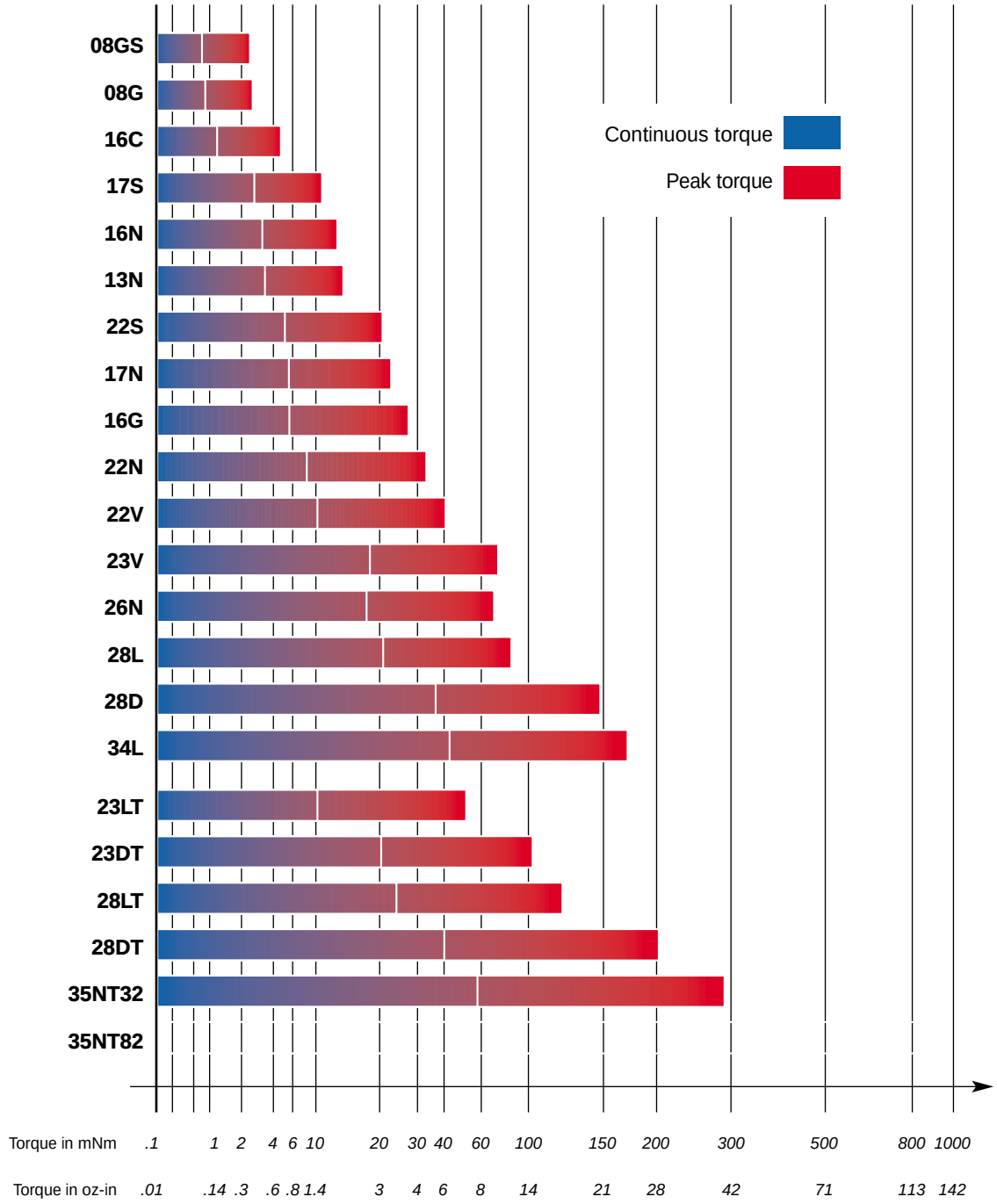

Ranging from precious metal to Rotafente™ mechanical commutation systems, the escap® DC motors, all using the ironless winding technology, offer a broad range of products.

The above overwiew shows the values for continuous and peak torque for each motor type in the series.

These motors may be assembled with a range of reduction gearboxes and with optical and magnetic encoders. Motor-tacho units and complete drive electronics are also available. Please consult the table of contents on page 3.

© Portescap

Turbo Disc™ stepper motors

The high performance disc magnet technology

The exceptional possibilities offered by the Turbo Disc™ line of disc magnet stepper motors are unequalled by any other kind of stepper motor. Their advanced technology, developed and patented by Portescap, allows for truly exceptional dynamic performance. The rotor of these motors consists of a rare earth magnet having the shape of a thin disc which is axially magnetized.
A particular magnetization method allows for a high number of magnetic poles, giving much smaller step angles than conventional two-phase permanent magnet stepper motors.
Such a rotor design has a very low moment of inertia, resulting in outstanding acceleration and dynamic behaviour. These features, together with high peak speeds, mean that any incremental movement is carried out in the shortest possible time.
Low inertia also means high start/stop frequencies allowing to save time during the first step and to solve certain motion problems without applying a ramp.

Those motors specially designed for microstepping feature a sinusoidal torque function with very low harmonic distortion and low detent torque. Excellent static and dynamic accuracy is obtained for any position and under any load or speed conditions.

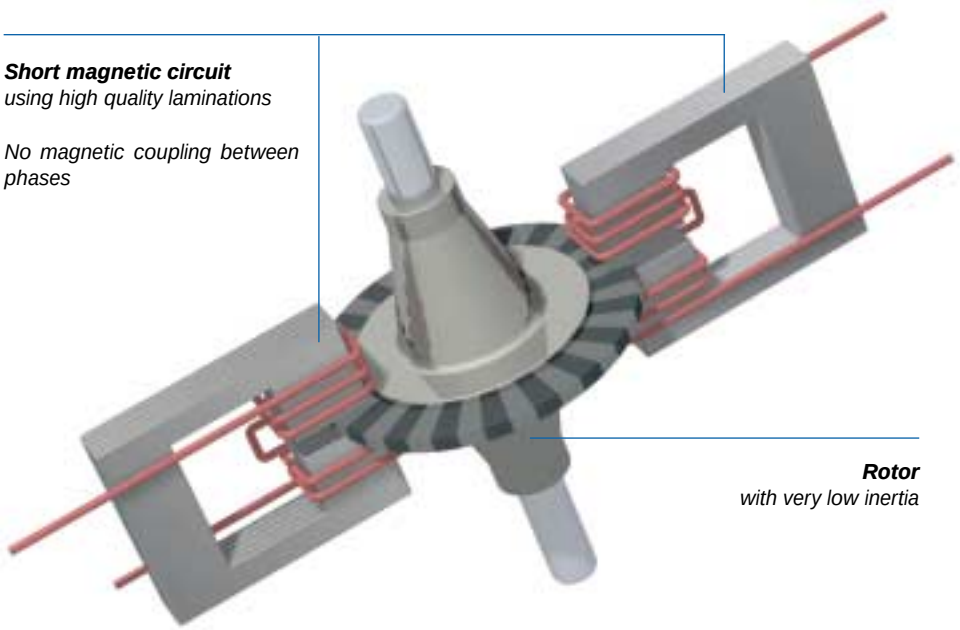

Concept detail	Motor characteristics	Advantages for the application
Thin multipolar rare earth disc magnet	Very low rotor inertia	**Very high acceleration** **High start/stop frequencies**
Very short iron circuit made of SiFe laminations Coils placed near to the airgap	Low iron losses More torque at high step rates	**High speeds** **High power/volume ratio**
Independent magnetic circuit Simple magnetic circuit	No coupling between phases Sinusoidal torque function, low detent torque	**Superior angular resolution in microstep mode**
Optimally dimensioned iron circuit	Torque constant is linear up to 2 to 3 times nominal current	**High peak torques**
High energy magnet	High power to weight ratio	**For motors in mobile applications** **For size limitations**

© Portescap

Turbo Disc™ motor torque range

Technical specifications, see page 71

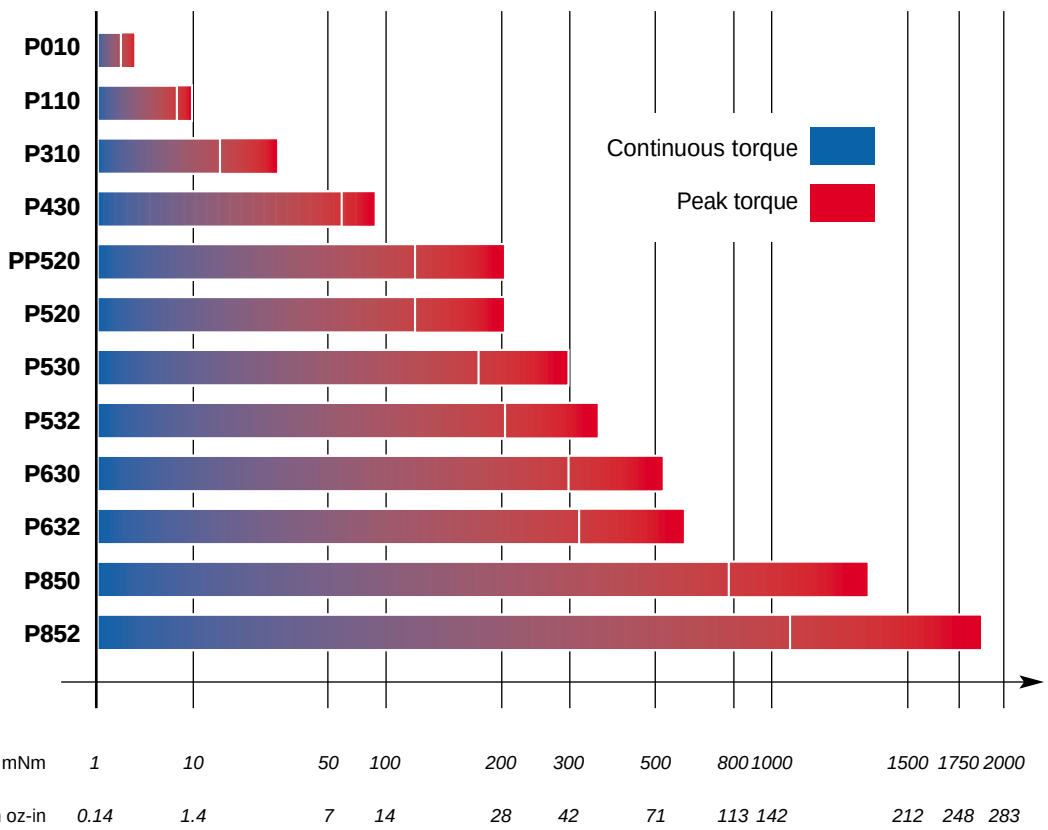

Iron saturation effects
Torque/current
example: escap® motor type P532.
Normalised Torque (%)

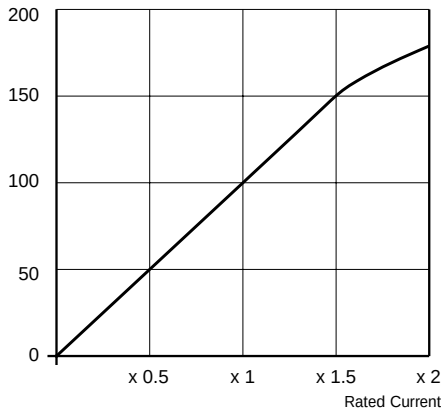

The unique electromagnetic characteristics of disc magnet motors permit them to operate well below any saturation of the magnetic circuit, where torque is truly proportional to current. By current boosting, performance can momentarily be pushed well above nominal values.

Iron losses
Comparison DM/Hybrid
same torque, losses due to magnet flux only.
Loss (Watts)

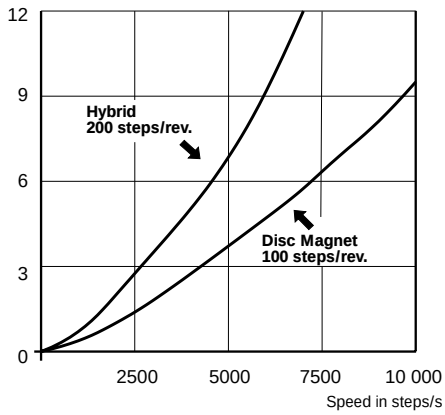

The stator is designed for the shortest possible magnetic circuit, using high quality iron laminations. This gives low iron losses and more torque at high speed.

© Portescap

BLDC Motors

The Small Brushless DC Motor technologies

Conventional DC motors use a stationary magnet with a rotating armature combining the commutation segments and brushes to provide automatic commutation. In comparison, the brushless DC motor is a reversed design: the permanent magnet is rotating whereas the windings are part of the stator and can be energised without requiring a commutator-and-brush system. Therefore this motor type achieves very long, trouble-free life even while operating at very high speeds.

One technology uses a self-supporting cylindrical ironless coil made in the same winding technique as for our ironless rotor DC motors: this is called the BLDC motor, slotless iron structure. The rotor is a cylindrical two-pole magnet, the stator tube is made of iron laminations. With this construction a uniform and constant airgap is obtained. If the tube is fixed to the magnet and rotates with it, iron losses are avoided. The other technology is called BLDC motor, slotted iron structure. The iron cores are part of the housing. The rotor is a multiple-pole magnet.

The position of the rotor field is continuously monitored to ensure correct timing of the commutation (switching of the current in the windings through power transistors). Three options for supervising the rotor position are proposed. The first one uses no sensor inside the motor but derives the information by analysing the shape of back-EMF. It is easy to implement and recommended mainly for high speed continuous operation. Another option are Hall sensors built into the motor, signalling the rotor field strength. Finally, an encoder or resolver may be added to the motor externally. It provides very high resolution and allows the BLDC motor to perform anything a DC with brushes can do but without the drawbacks of a mechanical commutation system.

Construction of three BLDC motors: 22BT (with the tube rotating with the magnet, right), 26BC, slotless iron structure (left) and a B09 motor with slotted iron structure (center)

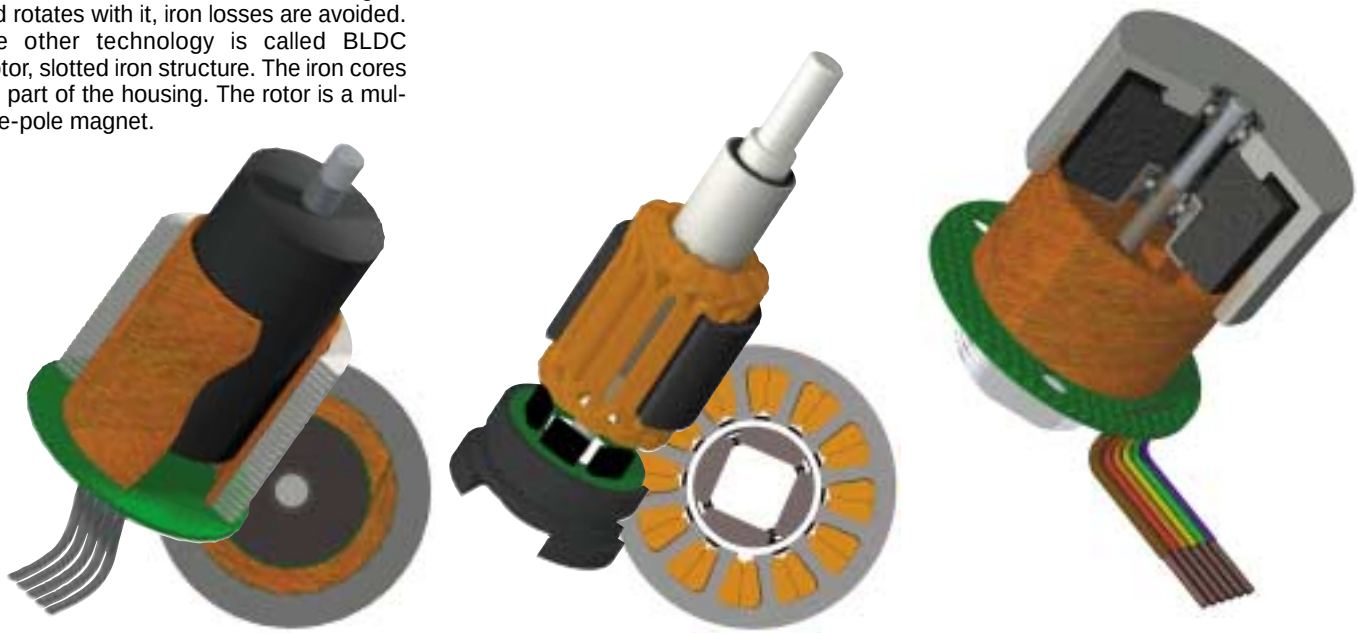

Concept detail	Motor characteristics	Resulting advantages
DC device	Essentially linear torque/speed curve, with torque proportional to current and speed proportional to voltage	Possibility of speed and position control
Brushless design	Life is not limited by brush wear but only by wear on ball bearings	Very long life, high reliability, insensitive to environnement (no arcing), to shocks and to vibration
Static winding attached to motor housing	Improved heat dissipation	Overload capability
Slotless configuration	No detent torque	Excellent velocity smoothness
Versions without position sensor	Typically used in spindle applications	Cost effective Less sensitive to environnement Only three connecting wires
Versions with Hall effect sensors	Typically used in applications with high variations of speed or load	Very simple commutation circuitry
Versions with encoder or resolver	Typically used in incremental motion	Very precise speed and position control

© Portescap

BLDC technology

BLDC Motor torque range

Technical specifications, see page 99

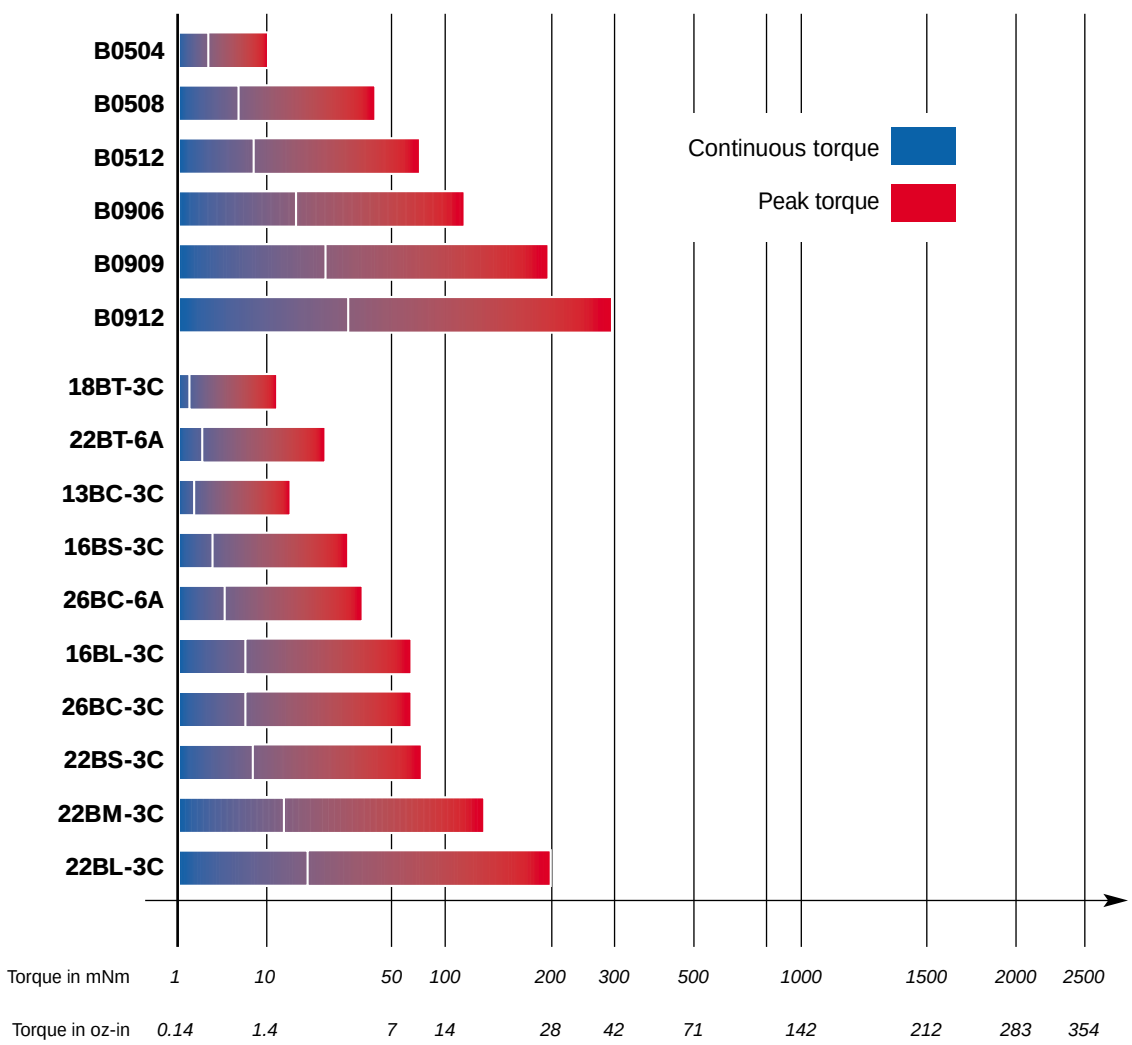

Brushless DC motors are a recent design but their market share increases rapidly, mainly for two reasons: the cost of servicing equipment in the field is rising continuously, and there are ever more applications where a breakdown may have severe consequences. Actually, DC motors using brushes are a very mature product and life time is rarely a problem except with speeds above 10’000 rpm. However, environmental and/or working conditions may possibily lead to a failure of brush-to-commutator contact, stalling the motor. The keyword with this solution is reliability.

The above overview gives the values of continuous and peak torque for each motor type in this product range. The motors may be assembled with reduction gearboxes, encoders and resolvers. Complete drive electronics are also available.
For all data please consult the table of contents.

© Portescap

The Spur and Planetary Gearbox Technologies

Complements well adapted to escap® motors

Every application has power requirements in terms of specific values of speed and torque. With a load demanding high torque at low speed, use of a large motor capable of developing the torque would be uneconomic, and system efficiency would be very low.
In such cases, a better solution is to introduce some gearing between the motor and the load. Gearing adapts the motor to the load, be it for speed, torque, or inertia. The motor-and-gearbox assembly will provide greater efficiency and be lower priced.
The increase in overall length of such an assembly may be quite small if an integrated gearmotor is used.

Principle of the spur gearbox. The pinion, of radius r1 and number of teeth z1, drives the input wheel of radius r2 and number of teeth z2. The reduction ratio per train "i" is z2:z1 which is equal to r2:r1.



Principle of the planetary gearbox:
The pinion S (=sun) having "s" teeth is driving the planets P (3 or 4 per train) which have "p" teeth and are fixed to the planet carrier.
A = stationary annulus with "a" teeth.
The reduction ratio per train is i = (a:s) +1.



Concept details	Gearbox characteristics	Resulting advantages
Spur gear concept:		
Only 1 transmission point per train	Low friction per train Arrangement of several trains as intended by the designer Input and output shaft not necessarily in line Two output shafts possible	Good efficiency, about 0.9 per train Long gearbox of small diameter or short gearbox of large diameter Free choice for placing the motor relative to the output shaft Mounting of a sensor, a potentiometer etc.
Input wheel made of high grade plastics	Reduction of mechanical noise generated at high motor speeds	Silent functioning
Planetary concept:		
3 or 4 transmission points per train	Reduction ratio per train is higher but so is friction Can transmit higher torques Input and output of a train have the same direction of rotation Less backlash	Less trains for a given reduction ration efficienc about 0.85 per train Very compact gearbox for its performance For any number of trains, the load always rotates in the same direction as the motor Smaller shock in case of a rapid reversal of motor rotation

© Portescap

Torque range of escap® gearboxes

Technical specifications, see page 115

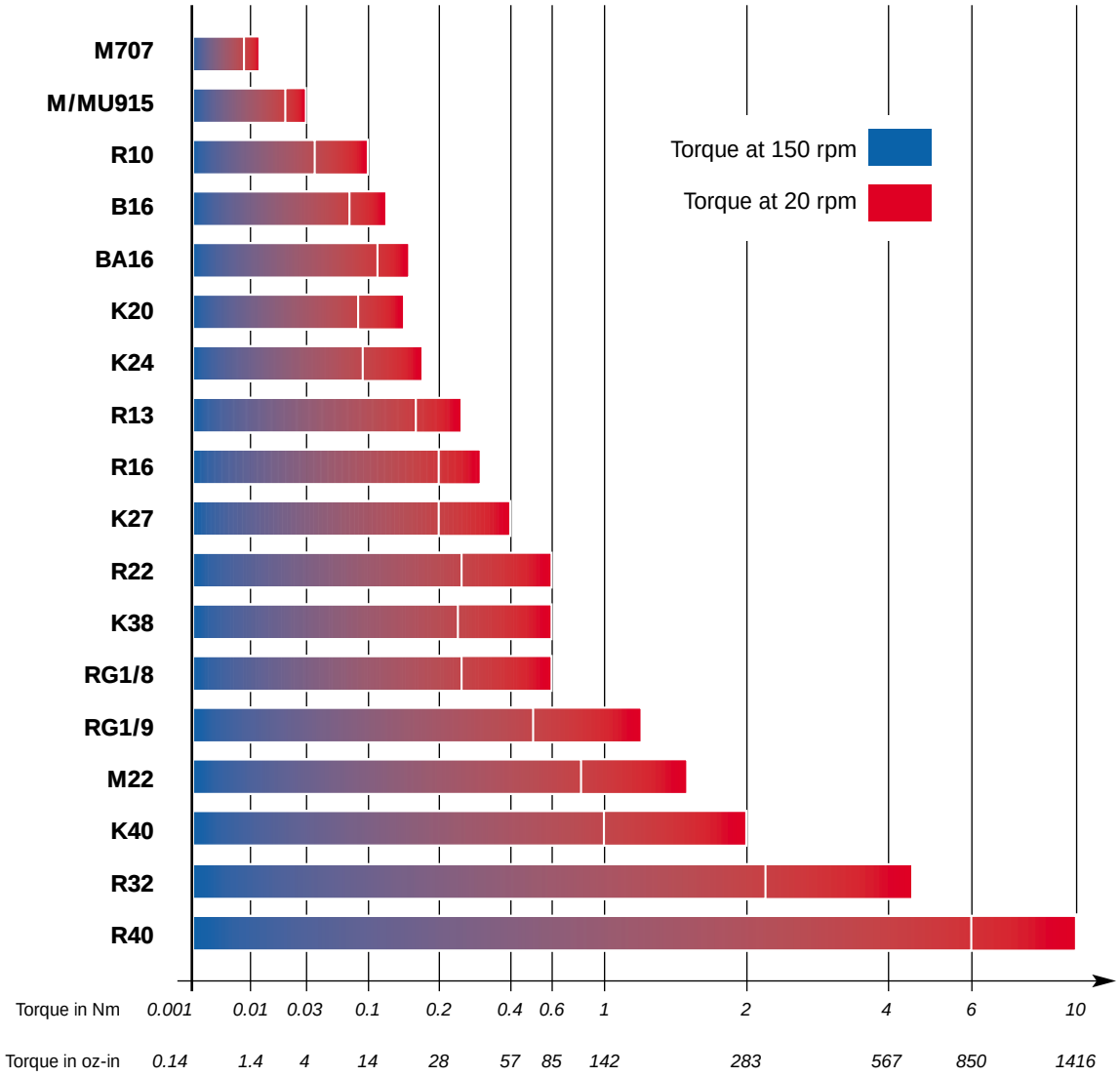

For details please consult the Gearbox Data Sheet section.

The above chart shows the values of continuous and peak torque for each gearbox of this product range.
Several types are available with built-in clutches or with freewheels.
For all this information please consult the Gearbox Data Sheet section.

Also listed in the Gearbox Data Sheet section is a series of gearmotors, having a designation starting with the letter M or B... .These are units where a spur gearbox is directly assembled on a DC motor without a mechanical interface. The procedure allows for a reduction of the length and weight of the unit.
For the many cases where the motor rotation is converted into linear motion, the L10 actuator offers a well adapted solution combining a spur gearbox with a lead screw.

© Portescap

The escap® Encoder and Tachometer Technologies

Controlled movement
High performance drive and servo systems should not be limited by the precision and reliability of their sensors.

Whether exact speed control or precise positioning is required, the escap® product line provides the right solution to the particular challenges of your application. It offers precision tachogenerators as well as optimal combinations of motor-tacho units, optical and magnetic encoders integrated into or adapted onto the motor, and complete motor-tacho-encoder units.



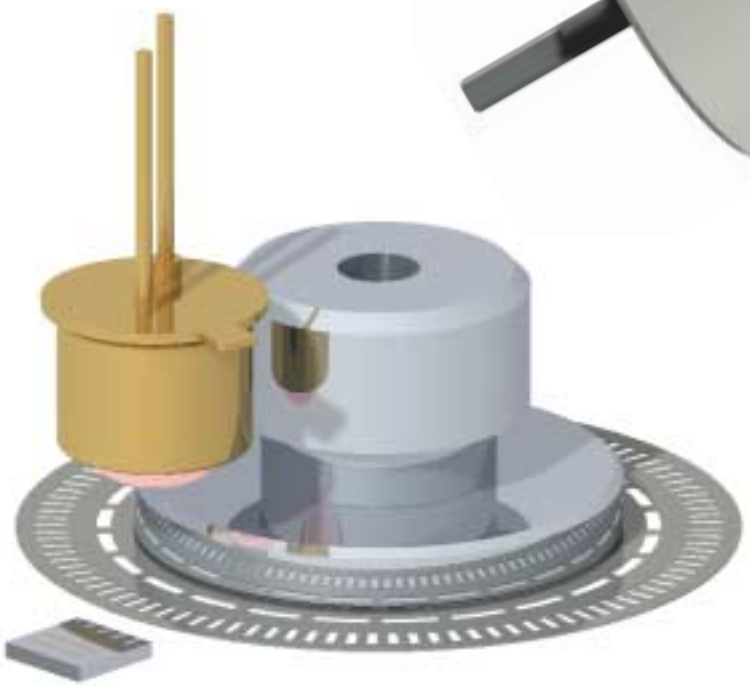

Concept details	Characteristics	Resultant advantages
DC tachometer: V*	Delivers a continuous signal	Easy control even at very low speeds
Ironless rotor	Adds neglectable inertia	Little additional load for the motor
Commutation system made of precious metals	Constant signal quality	Low sensitivity to hostile environments
Magnetic encoder: P*	Very simple construction	Insensitive to hostile environments
Encoder integrated in the motor	Compact design	Negligible increase in length of the unit
Position monitored by Hall sensors	Two output channels	Very low current consumption
		High reliability and long life
Optical encoder: P + V*	High resolution	Very precise positioning
	Two channels plus Home position	Facilitates counting the number of revolutions
Phototransistors in push-pull	Signal level very stable	No phenomenon of ageing
Stand-by mode	Cuts LED supply at stall	Lower consumption, lower temperature rise
Mask integrated on receivers	No thermal drift	Insensitive to temperatures, small dimensions

* P = position sensor
* V = velocity sensor

© Portescap

The escap® Encoder and Tachometer

D.C. Tachogenerators
The combination of an ironless rotor, a high grade permanent magnet, and a commutation system made of precious metals, results in escap® D.C. tachogenerators having a truly linear relationship between angular velocity and induced voltage, a very low moment of inertia and negligible friction.
These tachos are available both as a standalone item or within a complete motor-tacho unit which has both the motor and the tacho windings mounted on the same shaft, supported by only two bearings. This construction provides a remarkable mechanical rigidity.
Units may also include an optical encoder and can be assembled with a gearbox.

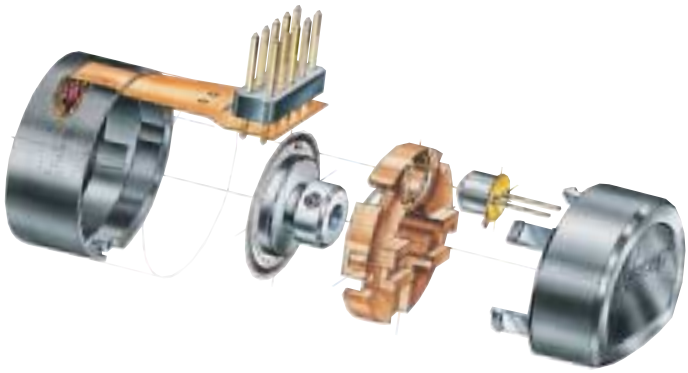

Optical encoders
The new type E (formely A) incremental optical encoder has three output channels. It uses a dedicated ASIC having a matrix of optoelectronic sensors (patent pending) which receives infrared light from an LED after its passage through a metal codewheel.

The mask determining the phase angle and index position is directly integrated onto the circuit, ensuring very high precision. The differential measure of the light modulated by the codewheel generates digital output signals insensitive to temperature drift with an electrical phase shift of 90° between channels A and B. The standard version of the encoder provides CMOS compatible complementary signals for improved signal transmission and noise rejection. Besides the detection of the direction of rotation and signal transitions in channel A and B for direct control of a counter or a microprocessor, the integration of this particular circuit offers additional functions such as a stand-by mode for reduced current consumption in battery powered equipment.

A variety of connections are possible.

This incremental encoder is highly insensitive to severe environmental conditions. It offers a high resolution within a very compact package, and it may be mounted to a large variety of motors.

Magnetic encoders
The integrated escap® type D magnetic encoder consists of a multipolar magnet mounted directly on the motor shaft. As the motor shaft turns, magnetic flux variations are detected by Hall sensors which generate two TTL-CMOS compatible output signals having a 90° phase shift between both channels. The simple and robust design of this sensor makes it ideally suited to applications with severe operating conditions, such as high temperature, dust, humidity, and vibration.
Integrated into escap® motors, these units are intended for applications requiring compact and reliable high performance systems for speed and position control.

Available motor-encoder and motor-tacho units

Motor	Tacho	Magnetic encoder		Optical encoder
		D13	F16	E9(A22)
13N		●		
16N			●	
17S			●	
17N			●	
22S			●	
22N			●	●
22V	●		●	●
23LT				●
23V	●			●
23DT				●
26N				
28L	●			
28D	●			
28DT				●
35NT32				●
35NT82	●			●
P530/P532				●
P630/P632				●
P850/P852				●
22BC				●

● Combinations

© Portescap

The Portescap offer

To satisfy the variety of changing requirements of today's industries, Portescap offers a broad range of standard, non-standard and custom made solution.
The characteristics and standard tests of our products are outlined in the pages describing the technologies.
To satisfy particular requirements Portescap is prepared to offer solutions tailored to various fields of applications.

CE Regulations
According to the electromagnetic Compatibility directives in force today, the CE marking is obligatory for apparatus containing electric components intended to final user. The motors manufactured by Portescap are not subjected to the electromagnetic compatibility directives since they are considered as components. The final product only in which this component is mounted is subject to the applicable norms. The CE marking is therefore not mandatory.
Concerned about giving some guarantees to our customers, our motors have still been through an EMC conformity test (made by an official laboratory) in order to define their electromagnetic disturbances level. All tested motors have been declared as conform to the standard 89/336/CEE in force. A certificate of conformity can be delivered upon request.

Services associated with the API Portescap offer:

- after-sales technical assistance
- special products which may include:
  - 100% or defined AQL testing of standard or other requested parameters
  - documentation of results
  - certificate of conformity
- development of custom made solutions or subsystems
- supply upon request of documents dealing with the product or the manufacturing process if agreed upon
- assistance and advice on applications.

Our constant desire to satisfy customer needs in a changing industrial world requires flexibility and adaptation of our offer.
For that reason the availability of our products from stock, as standard, on request or custom made, is not defined in this catalogue but in a separate document «Product Availability», which is attached at the end of the catalogue and is updated frequently.

The General Conditions of sale of Portescap, respectively the ones of its Affiliates, apply to all deliveries. Any different agreement must be confirmed by the supplier in writing.

The continuous efforts to improve our products may lead us to ship products which may differ from the description in this literature. For standard products we reserve the right to make design changes without prior notice.

Operating life and shelf life as well as the guaranteed performance, may vary with the customer's individual application.

To help solve practical problems when using our products, you may contact our sales unit application engineers.
However, the user is solely responsible for the use of our products and, particularly for their inclusion in an assembly.

© Portescap

Technical & Engineering section

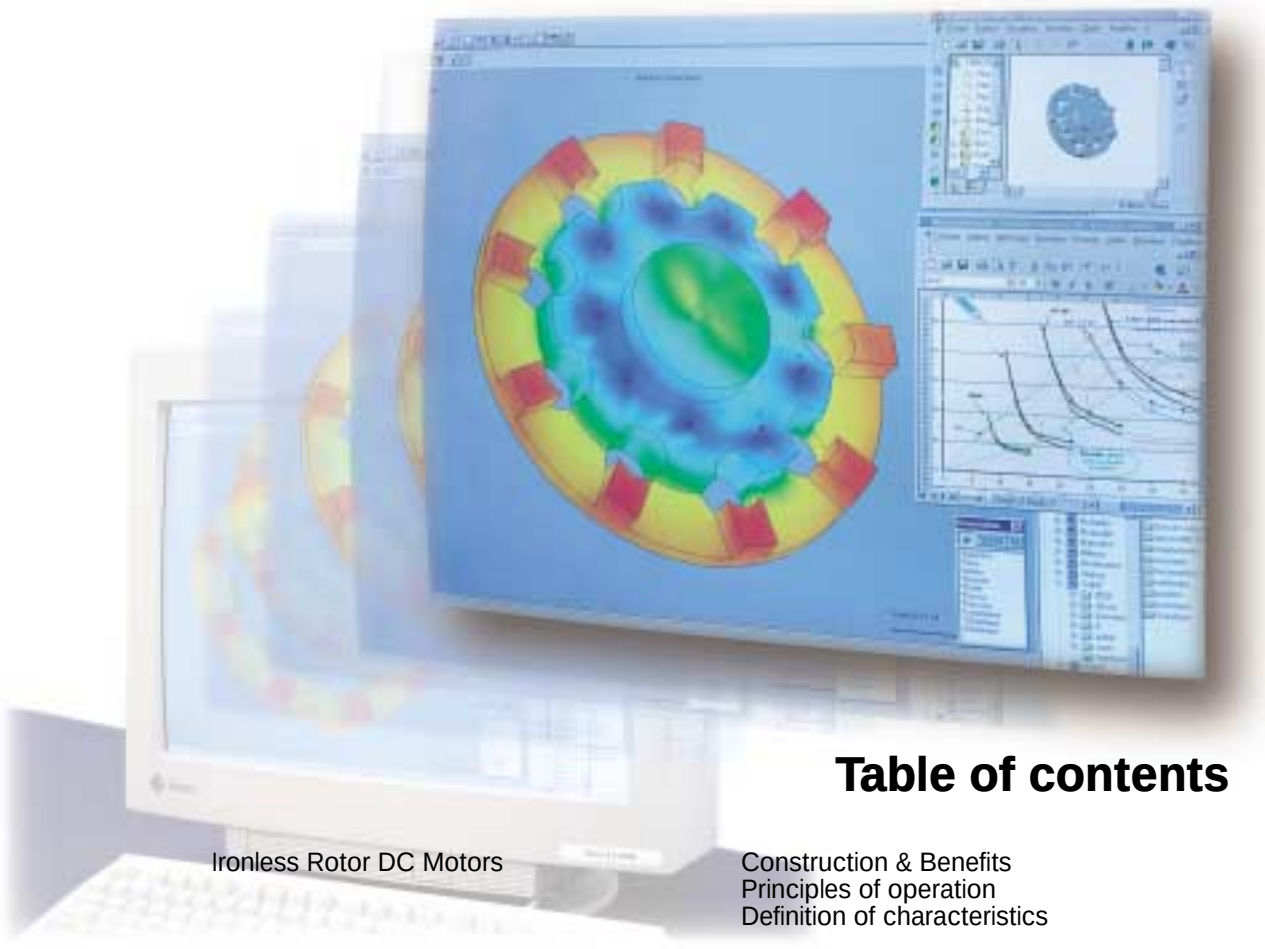

Table of contents

		page
Ironless Rotor DC Motors	Construction & Benefits	22
	Principles of operation	23
	Definition of characteristics	24
Turbo Disc™ Stepper Motors	Construction & Benefits	25
	Terminology and definitions	26
Brushless DC Motors	Construction & Benefits	27
	Principles of operation	28
	Terminology and definitions	29
Gearboxes	Construction & Benefits	30
	Terminology and definitions	31
Feedback Devices	Construction & Benefits	32
Electronic Drives	Drivers	33
	The microstep mode	35
Formulary and parameters	Memorandum	36
	Load Data Form	37
	S.I. Units/Conversion table	38
Example of motor calculations	DC motor/BLDC motor	39
	Positioning with a DC motor	40
	Positioning with a Stepper motor	41
Coding system	Product designation	42

© Portescap

D.C. Motors

The ironless rotor motor technology

A state-of-the-art motor line
The escap® D.C. motor results from an original concept based on an ironless rotor, combined with a commutation system using either precious metals or a carbon/ copper combination.

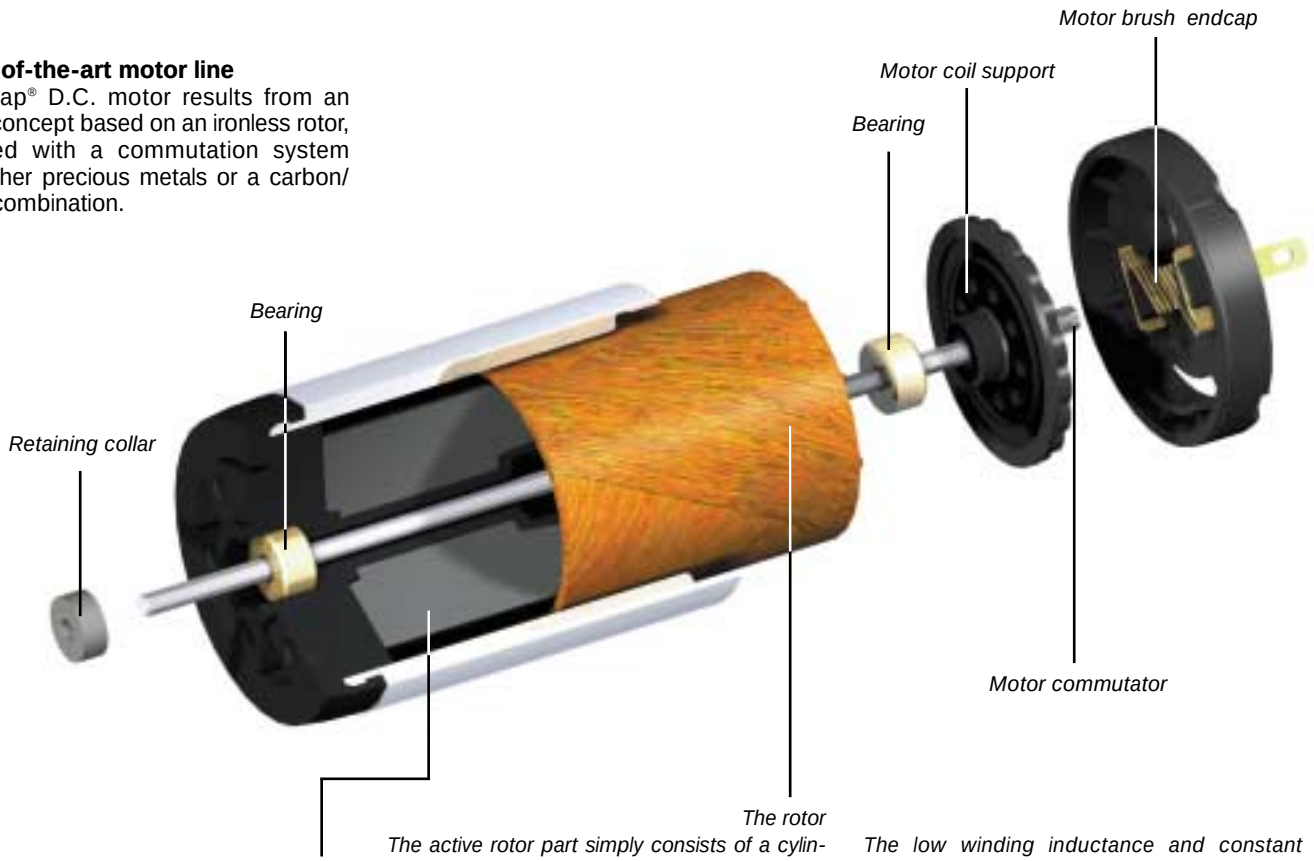

The stator part consists of a cylindrical two-pole permanent magnet, placed inside a steel tube closing the magnetic circuit. High quality rare earth or AlNiCo magnets ensure very high performance in a small envelope.

The active rotor part simply consists of a cylindrical skew winding, requiring no iron core. As a result, rotor inertia is very low.
Unlike other D.C. motor technologies, due to the absence of iron there is no cogging and the rotor will stop in any position. There are also no iron losses, and the running speed depends only on the supply voltage and load torque.

The low winding inductance and constant improvements of the quality of the brushgear materials, combined with a system for Reduction of the Electro-Erosion (the REE® system which is covered by a patent), all result in a reduction of the electrical wear by a theoretical 75%. Thus lifetime is significantly increased.

Features
The technological features of escap® ironless rotor D.C. motors lead to distinct advantages for high performance drive and servo systems. Low friction, low starting voltage, absence of iron losses, high efficiency, good thermal dissipation, linear torque-speed function: all these factors facilitate their use and simplify the servo loop. These motors offer optimum solutions for all battery-powered equipment where efficiency is a major concern, and for incremental motion systems where the low rotor inertia allows for exceptional acceleration.

The Rotafente™ copper-graphite commutation system
For applications requiring high continuous and peak torques, where high current densities have to be commutated and power stages such as choppers are used, escap® D.C. motors with the Rotafente® commutation system provide the optimal solution.

Operating range
Definition
The speed-torque diagram indicates the maximum recommended values of speed n, torque M and power P for both continuous and intermittent operation.

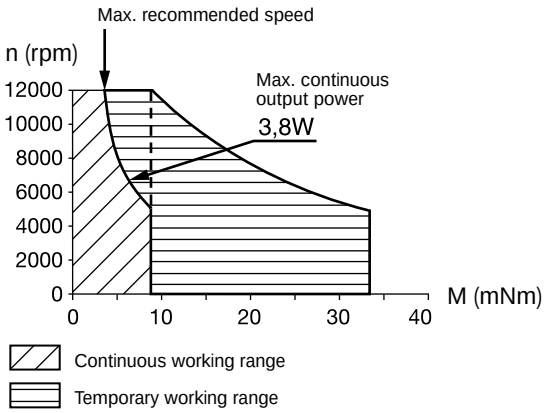

Within this range, the maximum ON-time has to be determined with regard to the thermal limits of the unit.

© Portescap

D.C. Servomotors
Principles of operation

Reference to the chart reveals useful performance information valid for all escap® servomotors.
It shows speed n, current I, output power P and efficiency η plotted against torque M for a given supply voltage U. Torque M is a function of the current I and the torque constant k (expressed in Nm/A). The motor develops its maximum torque M_s at stall (n=0), when the current is maximum and determined only by the supply voltage U and the rotor resistance R:

$$I_s = U/R$$

$$M_s = I_s \cdot k$$

With increasing speed, an increasing back-EMF E is induced in the armature which tends to reduce the current:

$$I = \frac{U - E}{R}$$

The value of E is the product of angular speed ω (expressed in rad/s) and the torque constant (expressed in V/rad/s=Vs=Nm/A):

$$E = k\omega$$

Thus, the supply voltage splits into two parts: RI, necessary to establish the current I in the armature, which generates the torque M, and kω to overcome the induced voltage, in order to generate the speed ω:

$$U = RI + k\omega$$

No-load speed n_0 is a function of the supply voltage and is reached when E becomes almost equal to U; no-load current I_0 is a function of friction torque:

$$n_0 = \frac{U - RI_0}{k} \cdot \frac{30}{\pi} \quad \text{(rpm)}$$

Power output P is the product of angular speed ω and torque M ($P = M \cdot \omega$); for a given voltage it reaches its maximum P_{max} at half the stall torque M_s, where efficiency is close to 50%. The maximum continuous output power is defined by an hyperbola delimiting the continuous and intermittent operation ranges.

Efficiency η is the mechanical to electrical power ratio ($\eta = P_m / P_{el}$). Maximum efficiency η_{max} occurs at relatively high speed. Its value depends upon the ratio of stall torque and friction torque and thus is a function of the supply voltage:

$$\eta_{max} = \left(1 - \sqrt{\frac{I_0}{I_d}}\right)^2$$

The maximum continuous torque depends upon dissipated power (I^2R), its maximum value is determined by:

$$M_{max} = k \sqrt{\frac{P_{diss}}{R_{max}}} = k \cdot I_{max}$$

$$= k \sqrt{\frac{T_{max} - T_{amb}}{R_{max} \cdot R_{th}}}$$

where T_{max} is the maximum tolerated armature temperature, T_{amb} is the ambient temperature, R_{max} is the rotor resistance at temperature T_{max} and R_{th} is the total thermal resistance (rotor-body-ambient).
At a given torque M, increasing or decreasing the supply voltage will increase or decrease the speed. The speed-torque function varies proportionally to the supply voltage U.

The «Think escap®» publications are available for those who want further information.

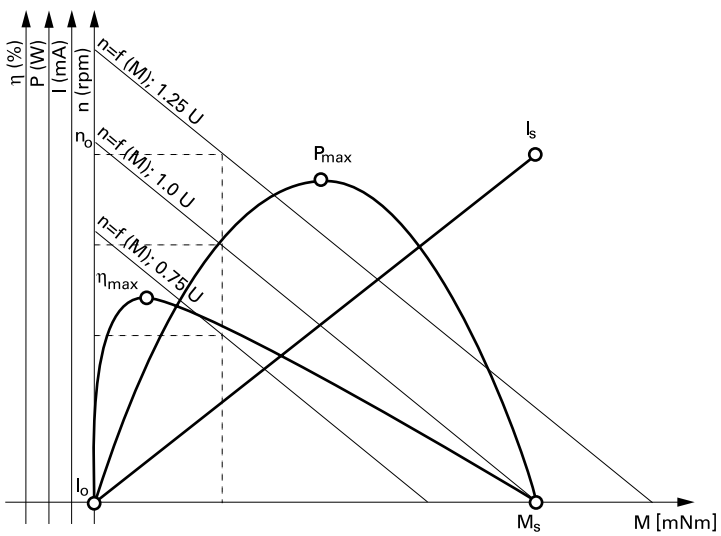

© Portescap

D.C. Servomotors

Definition of characteristics

Drawings
Unspecified tolerances are ±0.2 mm. Terminals or lead wires have no fixed exit relative to the mounting holes position. With motor-tacho units the relative position of motor cable and tacho cable is unspecified.

Connections
Most standard motor types have solder terminals. Soldering should be done quickly and at sufficient temperature (3 s, 350°C) in order to avoid overheating. Some motors and tachos are equipped with lead wires of 150 mm length and 0.14 mm^2 cross section. The motor rotates clockwise (viewed from the shaft end) when the red wire or + terminal is connected to positive. The motor may be operated in both directions and in any mounting position.
With a tacho rotating clockwise (viewed from the shaft end), the + terminal, or white lead, carries the positive.

MEASURED VALUES

1. Measuring voltage
Supply voltage at which the characteristics have been measured (at 20/25°C).

2. No-load speed
Speed of the unloaded motor, it is proportional to the supply voltage. Tolerance is ±8%, it is slightly higher for very small motors having a diameter <13 mm.

3. Stall torque
Torque developed at the moment of applying the supply voltage. The tolerance could exceed ±8% due to tolerance accumulation.

4. Average no-load current
Current of the unloaded motor at no-load speed. It represents the friction losses of the standard motor at that speed. Tolerance is about ±50%, and still more at low temperatures.

5. Typical starting voltage
The majority of motors (without load) will start to rotate at between 0.5 and 2 times the typical value.

MAXIMUM VALUES
The values of lines **6.** (max. continuous current), **7.** (max. continuous torque) and **8.** (max. angular acceleration) are recommended for usual operating conditions regarding thermal environment and peak current.

INTRINSIC PARAMETERS

9. Back-EMF constant
Voltage induced at a motor speed of 1000 rpm. The tolerance is ±8%.

10. Torque constant
Indicates the torque developed for a current of 1 A, as well as the EMF induced at an angular velocity of 1 rad/s. The tolerance is ±8%.

11. Terminal resistance
Value measured with the coil at 20/25°C (70/80°F). It includes the resistance of the commutation system, and it rises at a rate of 0.4%/°C. Tolerance is ±8% (±12% with graphite brushes). Depending on the rotor stall position, a brush could short-circuit two of the commutator segments and cause a lower reading.

12. Motor regulation
By dividing the motor resistance R by the square of the torque constant k, the motor regulation R/k^2 is obtained. It represents the slope of the speed-torque curve, i.e. the change in speed caused by a change of the load torque. A smaller value indicates that the motor will dissipate less power to provide a given torque, and therefore has a higher efficiency when transforming electrical energy into mechanical energy. The tolerance could exceed the nominal ±8% due to tolerance accumulation.

13. Rotor inductance
Measured with a frequency of 1 kHz at the terminals of the stalled motor. The value gives an order of magnitude.

14. Rotor inertia
Order of magnitude of the rotor inertia which depends mainly on the mass of copper rotating.

15. Mechanical time constant
It is the product of motor regulation (R/k^2) and rotor inertia J. It describes the motor physically taking into account electrical (R), magnetic (k) and mechanical (J) parameters. It is the time needed by the motor to reach 63% of its no-load speed or of its final speed in view of the voltage and load conditions. The tolerance may reach ±20% due to tolerance accumulation.

THERMAL PARAMETERS

16., 17. Thermal time constant
Order of magnitude of the time required by the rotor (or stator) to reach 63% of the temperature rise corresponding to a given constant power dissipation.

18., 19. Thermal resistance
Gives the armature temperature rise with respect to the body, or body to ambient, respectively, for a power dissipation of 1 W. These values are order of magnitudes, measured under unfavourable conditions. With measuring methods reflecting more common operating conditions, values which are 10 to 50% lower may be obtained.

OTHER PARAMETERS

Viscous torque constant
Gives the increase of losses proportional to speed. With ironless rotor motors viscous losses are very small, thanks to the absence of iron losses. Their viscous losses include windage losses in the airgap and the braking torque generated by short-circuiting the coils during commutation, as well as bearing friction.

Radial play
It is measured at 1 mm from the motor circlip.

Temperature
All specified values are measured at a temperature of 20/25°C (70/80°F)

Motor life
It depends upon several application parameters and in particular on speed and torque. It is limited by mechanical wear and by the electroerosion of the commutation system. Most of the motors are equipped with the REE® system in order to reduce electroerosion. Our engineers will be pleased to estimate lifetime figures for your specific application.
Certain product characteristics are subject to variations over the motor life. A statistic control following well defined procedures is made during numerous life tests.

Standard test of D.C. motors
100% test:
1. No-load speed ± 8%.
2. No-load current: ≤ 150% of the average value.
3. Direction of rotation.
4. Terminal resistance: ± 8%, with precious metal brushes.
5. Starting voltage: ≤ 200% of the average value.
6. Commutation signal: In the case of a precious metal system the signal delivers exact information about the motor quality.
7. Axial shaft play: With sleeve bearings it is set to a value between 50 and 150 µm.
8. Running noise: A measure does not make sense since noise depends largely on the application conditions. Nevertheless, from each lot samples are tested subjectively.

© Portescap

Disc magnet stepper motors

The high performance technology

Basic principles
The fundamental advantage of a stepper motor is its ability to execute a given speed profile and to position a load, without needing an encoder and a position loop. The difference between the stepper and the DC motor, or the BLDC motor, is in the motor concept and in their commutation.

The commutation
of stepper motors takes place outside and is independent of the angular rotor position. In DC motors it depends on the rotor position and is done either mechanically through the brush gear, or electronically in the case of a brushless DC motor.

The concept
of the stepper motor differs from that of the DC and BLDC motor in so far as it generates a large number of stable positions within one revolution. This originates in the principle of construction: a two phase motor using a rotor with a magnet of one pole pair has four stable positions per rev., whereas a two phase motor with 50 pole pairs has 200 of them and therefore makes 200 full steps/rev.

The number of commutations per rev. depends on the number of steps/rev. of the motor. Every electrical commutation provokes a variation of the magnetic flux, and each flux variation generates iron losses. In a stepper motor with many commutations per rev. these iron losses can no longer be neglected. It is for this reason that stepper motors of conventional design are not intended for rapid movements. The disc magnet stepper motor is the only one to offer exceptional dynamic behaviour.
This technology, developed by Portescap and for which a patent was granted, fully exploits newly available materials like rare earth magnets, which in conjunction with an innovative concept have produced exceptional results.

The standard test for disc magnet stepper motors
The high quality level offered by Portescap is assured by testing and checking throughout the manufacturing process. These tests follow a standard quality plan and well established procedures.

The following motor parameters are checked against the values given in the catalogue or in their specification, at a temperature of 20/25°C.

100% test:
1. The resistance of each winding.
2. Back-EMF of each phase to determine their holding torque and any difference between them.
3. Phase changes of back-EMF periods over one revolution.
4. The quadrature between both phases to determine angular accuracy.
5. Friction torque.
6. Detent torque.

Specific tests:
Tests of other parameters and/or following other criteria may be done according to customer needs. They are then part of the customer specification and are noted on a quality control document.

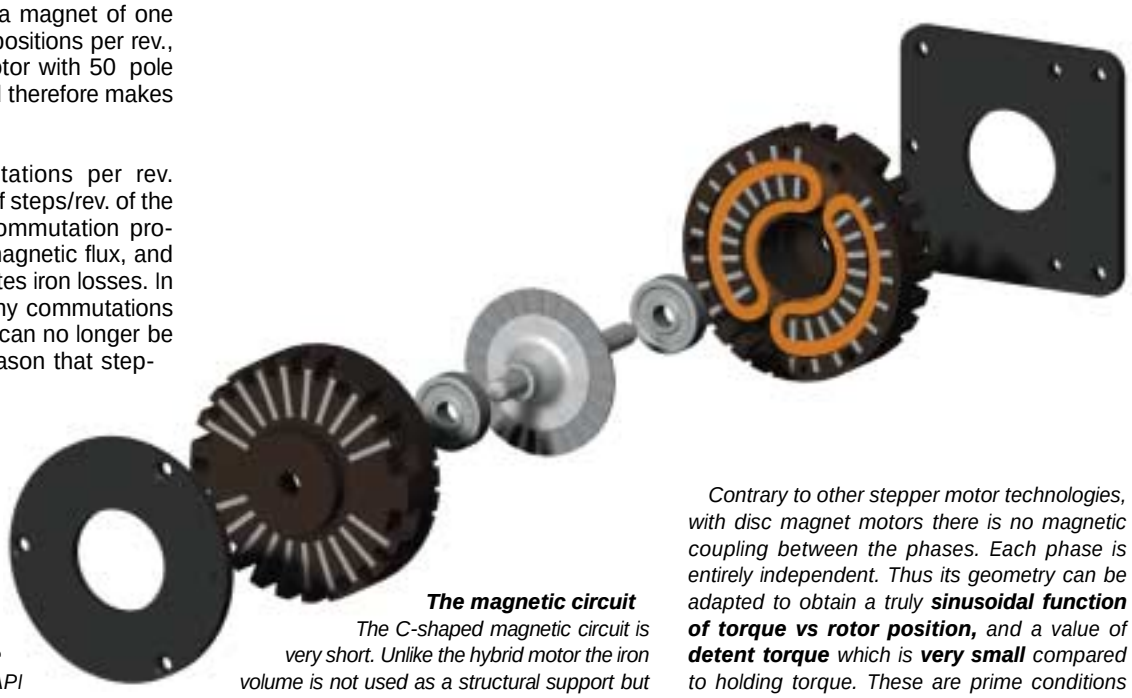

The Rotor
The rotor as the heart of this technology consists of a rare earth magnet in the shape of a thin disc. API Portescap's know-how and experience has allowed us to optimise the magnetic circuit, and to axially magnetise the disc with a large number of pole pairs. Compared to traditional two phase PM stepper motors this gives a higher number of steps/rev. Unlike other motor technologies the rotor does not require an additional iron structure to obtain flux variations; therefore ***rotor inertia is very low****. It is capable of exceptional accelerations which, together with a high peak speed, make this motor technology suitable for fast incremental motion.*

Furthermore, the low rotor inertia favours high starting frequencies which save time during the first step. In addition, certain movements can be executed without having to generate an acceleration ramp.

The magnetic circuit
The C-shaped magnetic circuit is very short. Unlike the hybrid motor the iron volume is not used as a structural support but optimised strictly in view of the magnetic induction. Each elementary circuit is made of SiFe laminations; their low volume assures minimum iron losses from hysteresis and eddy currents. Thus ***very high peak speeds*** *can be achieved; even at 10'000 steps/s iron losses will not cause an excessive temperature rise.*

For the user this means a ***very high power output*** *from a small motor size, e.g. up to 50 W for the P532 motor (52 mm Ø x 33 mm).*

Although the iron circuit is very short, it is still dimensioned in order ***not to saturate under boost conditions.*** *For the customer this may allow the use of a smaller size motor and boosting it during acceleration or braking. This results in a higher torque to inertia ratio.*

Contrary to other stepper motor technologies, with disc magnet motors there is no magnetic coupling between the phases. Each phase is entirely independent. Thus its geometry can be adapted to obtain a truly ***sinusoidal function of torque vs rotor position,*** *and a value of* ***detent torque*** *which is* ***very small*** *compared to holding torque. These are prime conditions with microstep operation, if* ***high positioning accuracy*** *is needed on any microstep.*

© Portescap

escap® Disc magnet stepper motors

Terminology and definitions

Step sequence
In a two phase motor each phase may carry either positive or negative current. Therefore one sequence consists of four successive states of excitation corresponding to four steps (see charts below). The sequence can be made with either one or both phases energised at a time. In the first case, a 40% current increase will provide a torque close to the one obtained with both phases energised. By alternately energising one and two phases, an 8 state sequence is generated corresponding to 8 halfsteps.

Microstep mode
A full step can be divided into microsteps by successively decreasing the current in one phase while increasing it in the other phase. This mode decreases the ripple content of motor torque and speed; it increases system resolution and assures a smooth and silent operation without resonance problems.

Drive circuits
A stepper motor drive circuit requires a drive logic circuit, two power stages and, possibly, an optional damping circuit.
The clock generates the pulses, each of which represents one step or microstep.
In positioning systems the controller (generally a microprocessor) generates the clock pulses corresponding to the number of steps to be made, at the rate wanted which may include an acceleration ramp.
The translator (or sequencer) coordinates the power transistor control signals which assure the correct energising of the phases as required for the move.
An electronic damping circuit can be used to damp end-of-step ringing, which may be disturbing in systems having low friction.
This is achieved by using either speed sensors or the Back-EMF of one of the two coils of each phase, for modulating the phase currents such as to generate viscous torque.

Pull-in frequency
Step rate at which the motor can start and stop without loosing or gaining steps. It depends on the rotor inertia and the load.

Pull-out frequency
Highest step rate the motor can follow, after ramp-up, without error. It depends on motor iron losses, on the driver and its voltage, and on the load.

Useful torque
Highest possible load torque indicated by the torque-speed curves. At low speed it is usually about 60 to 80% of holding torque. At higher step rates it is largely influenced by the driver type and supply voltage. As the type of load and stiffness of its coupling may also affect it, these curves merely give an indication.

DEFINITION OF CHARACTERISTICS
Holding torque
Highest load torque applicable to an energised motor without causing continuous rotation.

Detent torque
Highest load torque applicable to a de-energised motor without causing continuous rotation. Detent torque includes magnetic cogging, bearing friction and hysteresis. The rest positions without current are the same as with one phase energised.

Temperature
All values are measured at 22°C. In continuous operation, the maximum rated temperature of the phase windings sets the limit at 130°C. The temperature rise is mainly due to Joule losses. At high step rates iron losses are added.

Angular accuracy
It depends on the overall quality of the motor and the driver. The step positions are measured for an unloaded motor, with a driver introducing a negligible error. The absolute error, due to manufacturing tolerances, is the error between the real rotor position and its theoretical position.

Power rate
This figure of merit represents the motor's ability of supplying power to a load. It equals the square of the motor torque divided by its rotor inertia. The higher its value, the shorter is the time needed for positioning the load.

Full-step mode
1 phase on

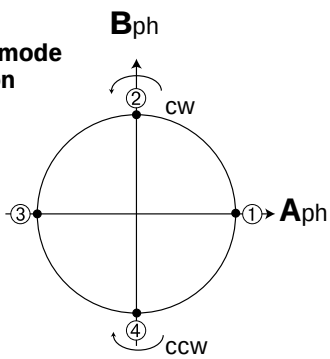

Full-step mode
2 phases on

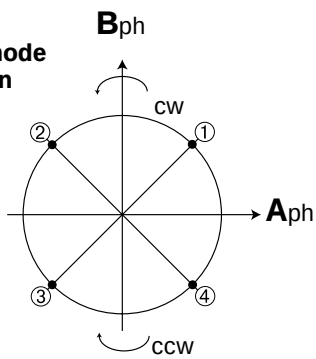

Half-step mode

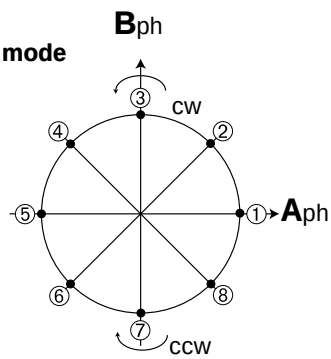

© Portescap

Small Brushless DC Motor Technology

Construction and Advantages

Small brushless DC motors offer the following advantages:

- they replace conventional DC motors giving insufficient life and/or reliability in existing applications
- they allow the development of entirely new applications, made possible because these motors can run at very high speed, ensure very long life, are very reliable and tolerate hostile environments.

Their design is based on a magnet which is rotating and windings which are stationary. This way, there is no need for a mechanical commutation system and its problems of wear, contact resistance and arcing no longer exist.

Components of the stator, rotor and endcap of an escap® 26BC motor

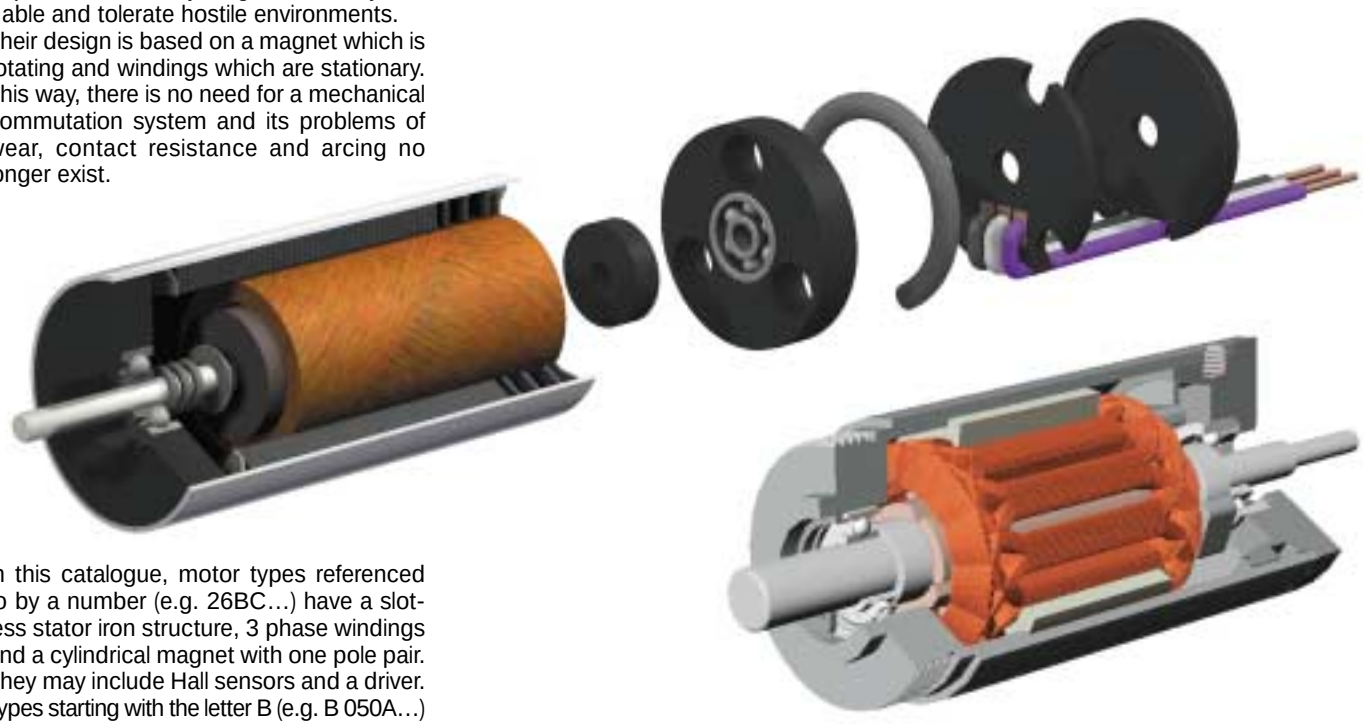

In this catalogue, motor types referenced to by a number (e.g. 26BC…) have a slotless stator iron structure, 3 phase windings and a cylindrical magnet with one pole pair. They may include Hall sensors and a driver. Types starting with the letter B (e.g. B 050A…) use a slotted stator iron structure with three phase windings and a multipolar rotor magnet. They detect the rotor position through Hall sensors but are not available with integrated drive circuits.

Particularities of the different escap® motor models using a slotless stator structure

3C motors:
These types use the same winding technique as the escap® DC motors with ironless rotor. They have no position sensors. With only three connecting wires, they are intended for operation with a drive circuit analysing back-EMF. They are typically used to drive constant speed devices such as fans, pumps, mirrors, chopper wheels and so forth. The 13BC and 22BC have rare earth magnets, the other ones use AlNiCo. The 22BL offers extremely high performance, it can develop a continuous torque up to 20 mNm and speeds close to 50 000 rpm.

8B motors:
This motor includes three Hall sensors and therefore uses 8 hook-up wires.

6A motors:
They feature Hall sensors and built-in commutation and drive circuitry. For simple unidirectional applications only two hook-up wires are necessary. The 22BT has its housing fixed to the rotor. This way there are no iron losses at all.

For the ball bearings used in these motors, MTBF figures based on values proposed by ball bearing manufacturers, under nominal load for 90% survival are:

- 30 000 hours at 10 000 rpm
- 20 000 hours at 15 000 rpm
- 10 000 hours at 30 000 rpm

Particularities of the motor models using a slotted stator structure

They are manufactured in the USA and available in sizes 5 to 15 (12.7 mm to 38.1 mm diameter). Each model includes two versions (e.g. B1106-050A and B1106-050B); “A” indicates that the 3 phase windings are connected in a triangle (Δ); the B version signifies a star connection (Y) which cuts approximately in half the current necessary for a given torque.

© Portescap

Small brushless DC motors

Principles of operation

The differences between a DC motor having a mechanical commutation system and a BLDC motor are mainly found in:
- the product concept
- the commutation of phase currents.

These differences are explained in the "Technology" section of this catalogue.
From the user's point of view, brushless DC motors follow the same equations as those with brushes: torque is proportional to current, speed depends on the voltage and the load torque.

The commutation of brushless motors
In the conventional DC motor commutation takes place mechanically through the commutator-and-brush system. In a BLDC motor, commutation is done by electronic means. In that case the instantaneous rotor position must be known in order to determine the phases to be energised.
The angular rotor position can be known by:
- using a position sensor (Hall sensor, optical encoder, resolver)
- electronically analysing the back-EMF of a non-energised winding. This is called sensorless commutation.

Use of Hall sensors
In general, BLDC motors have three phase windings. The easiest way is to power two of them at a time, using Hall sensors to know the rotor position. A simple logic allows for optimal energising of the phases as a function of rotor position, just like the commutator and brushes are doing in the conventional DC motor.

Use of an encoder or resolver
The rotor position may also be known by use of an encoder or resolver. Commutation may be done very simply, similar to the procedure with Hall sensors, or it may be more complex by modulating sinusoidal currents in the three phases. This is called vector control, and its advantage is to provide a torque ripple of theoretically zero, as well as a high resolution for precise positioning.

Use of Back-EMF analysis
A third option requiring no position sensor is the use of a particular electronic circuit. The motor has only three hook-up wires, the three phase windings are connected in either triangle or star. In the latter case, resistors must be used to generate a zero reference voltage. With this solution the motor includes no sensors or electronic components and it is therefore highly insensitive to hostile environments. For applications such as hand-held tools, where the cable is constantly moved, the fact of just three wires is another advantage.

The functioning of a sensorless motor is easy to understand. In all motors, the relation of back-EMF and torque versus rotor position is the same. Zero crossing of the voltage induced in the non-energised winding corresponds to the position of maximum torque generated by the two energised phases. This point of zero crossing therefore allows to determine the moment when the following commutation should take place depending on motor speed. This time interval is in fact equivalent to the time the motor takes to move from the position of the preceding commutation to the back-EMF zero crossing position. Electronic circuits designed for this commutation function allow for easy operation of sensorless motors.
As the back-EMF information is necessary to know the rotor position, sensorless commutation doesn't work with the motor at stall. The only way of starting is to pilot it at low speed like a stepper in open loop.

Remember:
- for commutation, position sensors are necessary when operating in incremental mode
- sensorless commutation is recommended only for applications running at constant speed and load.

Operating principle of BLDC motors
It follows the same equations as the DC motor using mechanical commutation except that parameters like iron losses and losses in the drive circuit are no longer negligible in applications where efficiency is of prime importance.

Iron losses
They depend on speed and, in the torque formula, may be introduced as viscous friction. The equation for useful motor torque becomes:

$$M_m = k \cdot I_m - k_v \cdot \omega - M_f$$

with
- M_m = motor useful torque
- k = torque constant
- I_m = motor current
- k_v = viscous coefficient for iron losses
- ω = angular velocity
- M_f = bearing friction

Losses in the electronics
The current and votage required by the motor and the drive circuit to operate at the desired speed and torque depend also on the drive circuit.
As an example, a driver bridge in bipolar technique will reduce the voltage available at the motor terminals by about 1.7 V, and the total current must include the consumption of the circuitry.

© Portescap

Small Brushless DC motors

Terminology and definitions

Drawings
They use the normal DIN/ISO projection. Unspecified tolerances are ±0.2 mm.

Rated Voltage
Supply voltage at which the characteristics have been measured, under an ambient temperature of 20 to 25°C.

Back EMF constant
It is mesured from the rated voltage and the no-load speed of the motor.

Equivalent impedance
It is the resistance between any two of the winding phases. In motors with a drive circuit, this measurement is not accessible.

No-load speed
It is proportional to the supply voltage. Tolerance is ±10%.

No-load current
Measured at no-load speed. Tolerance is about ±30%. For motor with integrated electronic commutation, the no-load current includes the current drawn by the driver. For motor with external commutation, the no-load current does not include the current drawn by the driver.

Maximum continuous current
It is limited by the temperature rise of the integrated circuit and/or of the winding which is rated at 130°C.

Max. continuous torque
It is determined by thermal conditions.

Thermal resistance
It gives an order of magnitude of the winding temperature rise per dissipated watt.

Rotor imbalance
At speeds above 10 000 rpm, a minor imbalance in the external load may cause vibrations which could damage the ball bearings and could also interfere with the application.

Number of poles
Unless otherwise specified, all Portescap Brushless DC motors have one pole paire (north + south).

Commutation angle
In Portescap Brushless DC motors with hall sensors, the Hall sensors are adjusted to privide a symetric commutation angle for both CW and CCW operations.

Standard tests for escap® brushless DC motors
Catalogue parameters are checked at an ambient temperature of 20-25°C.

Final inspection:
1. No-load speed at rated voltage, to verify the back EMF constant and the sensor position = 100%.
2. No-load current at rated voltage = 100%.
3. Vibration at rated voltage = 100%
4. Phase / phase resistance = according to sampling plan.

© Portescap

Reduction gearboxes escap® using spur and planetary gears

Construction & Advantages

Reduction gearboxes using spur gears
This gear technology offers advantages in current-limited applications where lowest input friction and high efficiency are essential. The broad range of escap® spur gearboxes is well adapted to our motor lines, and includes integrated gearmotors.

Planetary gearboxes
The main advantages of escap® planetary gearboxes are their high rated torque and a high reduction ratio per gear train. Both types use high quality composite materials. The all-metal, have a very compact design with excellent performance and lifetime.

High Speed Planetary gearboxes
This high performance product line was designed for use on BLDC motors with iron core windings. The gearboxes tolerate input speeds of several 10'000 rpm and output speeds of several 1000 rpm. That way a motor-gearbox unit of very small dimensions can provide extremely high values of speed and torque. The technical data are listed in the section Small Brushless DC Motor Data Sheet.

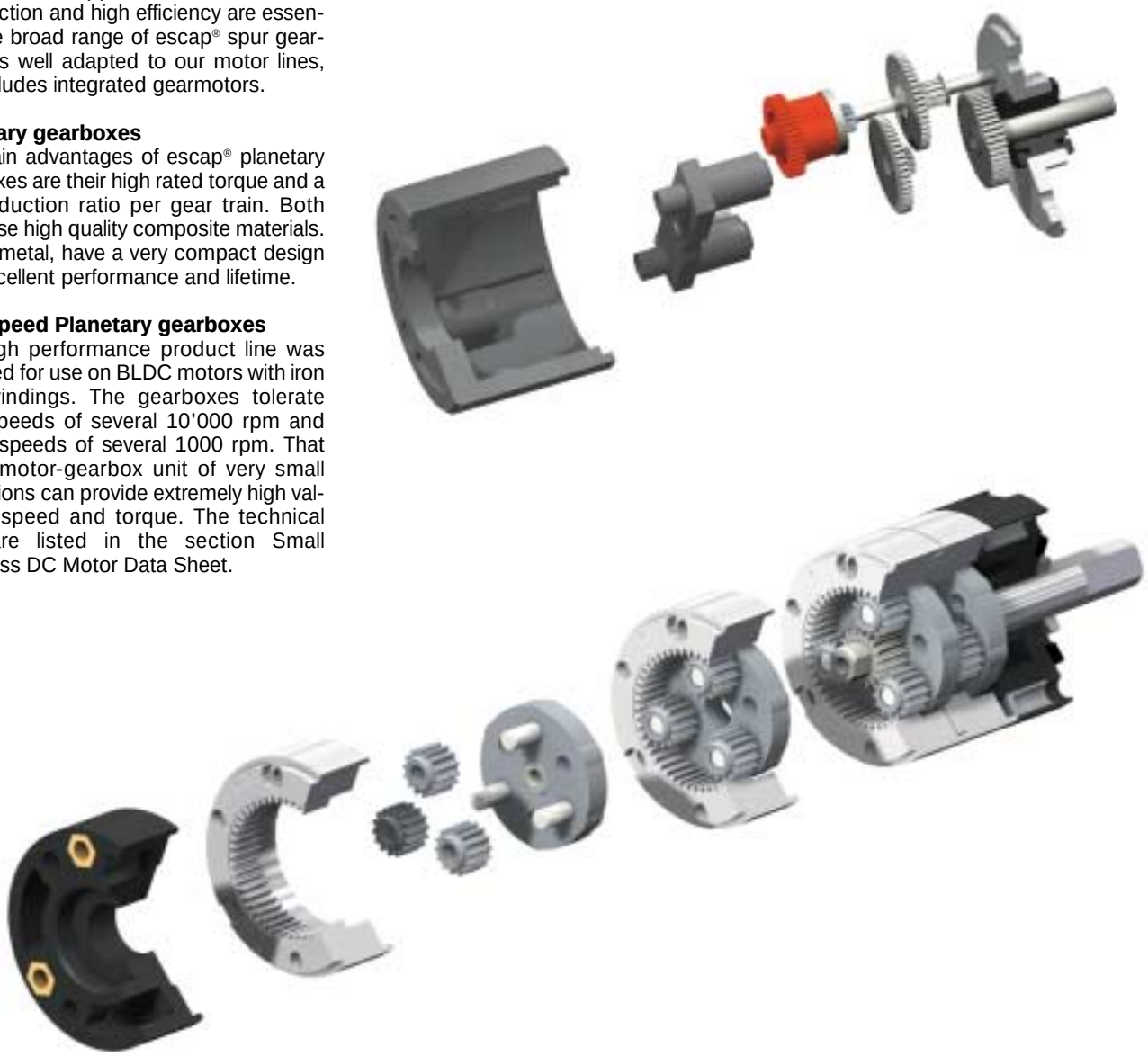

The diagram of dynamic torque shown with each gearbox type indicates two ranges of operation:

1. The range of continuous operation, defined after numerous life tests, ensures optimum characteristics and performance over the entire life if the gearbox is run in this area.

2. Within the range of intermittent operation a load torque of up to twice the values for continuous operation may be applied for a few seconds without permanent damage.

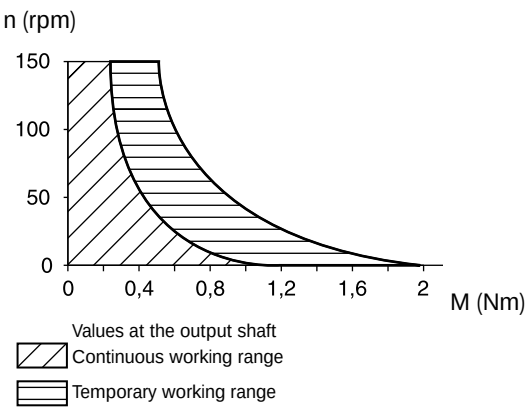

© Portescap

Reduction gearboxes escap® using spur and planetary gears

Construction & Advantages

Terminology

The ISO standard specifies a cylindrical spur gear by the module m, the number of teeth z, and the pitch diameter PD defining the imaginary circle which, in theory, rolls without slip on the pitch circle of the mating gear. In other words, only the part of the tooth situated at PD drives the mating gear without any slipping, whereas above and below PD there is slip between both teeth.

Pitch diameter PD: diameter of the theoretical circle rolling without slip.
Modul m: quotient of pitch and π, measured in mm, and also quotient of pitch diameter and number of teeth: $m = PD/z$
Pitch P: length of arc of the pitch circle between the same points of two adjacent teeth: $P = m \cdot \pi$
Pressure angle α: angle between the tangent to the pitch circle and the line perpendicular to the contact surface between two teeth. As forces between two surfaces are only transmitted perpendicular to the plane, this pressure angle, or torque transmission angle, determines the part of the force that is actually driving the gear wheel and which is proportional to the cosine of that angle. Portescap uses for standard spur gears a pressure angle of 20°.
Distance between teeth Wk: distance between two parallel planes on two opposite profiles, measured over k teeth. This important parameter is used for checking gear wheels.

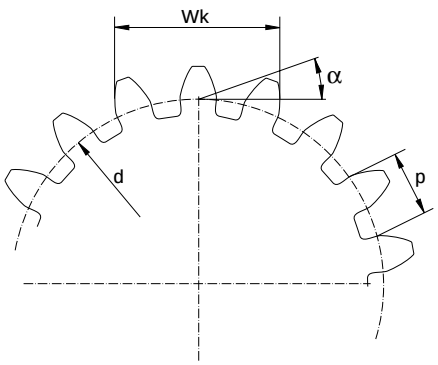

Definitions

Direction of rotation
It indicates the direction of the output shaft relative to the motor (= or ≠). In planetary gearboxes the direction is always the same at input and output, for any number of trains.

Efficiency
It depends mainly on the number of trains. It is an average value, measured at an ambient temperature of 20 to 25°C. A new gearbox has lower values which will reach the normal value after the run-in period.

Max. static torque
It is the peak torque supported at stall; beyond this limit value the gearbox may be destroyed.

Max. recommended input speed
It has a large influence on the noise level and life time of the gearbox and, depending on the application, should be considered when selecting the reduction ratio.

Backlash
This is the angle a gearbox output shaft can rotate freely with the input blocked. It is mainly due to gear play necessary to avoid jamming, plus shaft play and the elastic deformation of teeth and shafts under load. As it is load-dependent, two values are given, with and without a load torque.

Backlash
In fact, backlash of the preceding gear trains appears at the output shaft diminished by the reduction ratio. Contrary to this, output shaft backlash appears at the input multiplied by the ratio. With a 100: 1 ratio, a backlash of 1° represents a rotation of 100° at the input, and at each reversal of the motor, the output only starts rotating once these 100° are caught up.

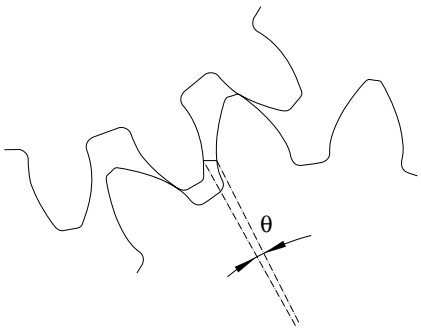

Standard test of escap® reduction gearboxes
The high quality level offered by Portescap is ensured by testing and checking throughout the manufacturing process. These tests follow a standard Quality Plan and well established procedures.
The gearbox is mounted to a motor running at 3000 to 4000 rpm. The following parameters are checked against the values given in the catalogue or in the specification, at a temperature of 20/25°C.

100% test
1. Input friction
Amplitude and stability in both directions of rotation, by measuring the current of the reference motor.

2. Running noise
The gearbox components are selected in order to assure a level and frequency compatible with common applications. Specific measurements are inappropriate since noise depends largely on operating conditions. Therefore a subjective test is made.

Specific tests
Tests on other parameters and/or following other criteria may be done according to customer needs. They are then part of the customer specification and are noted on a quality control document.

© Portescap

Sensors
Construction & Advantages

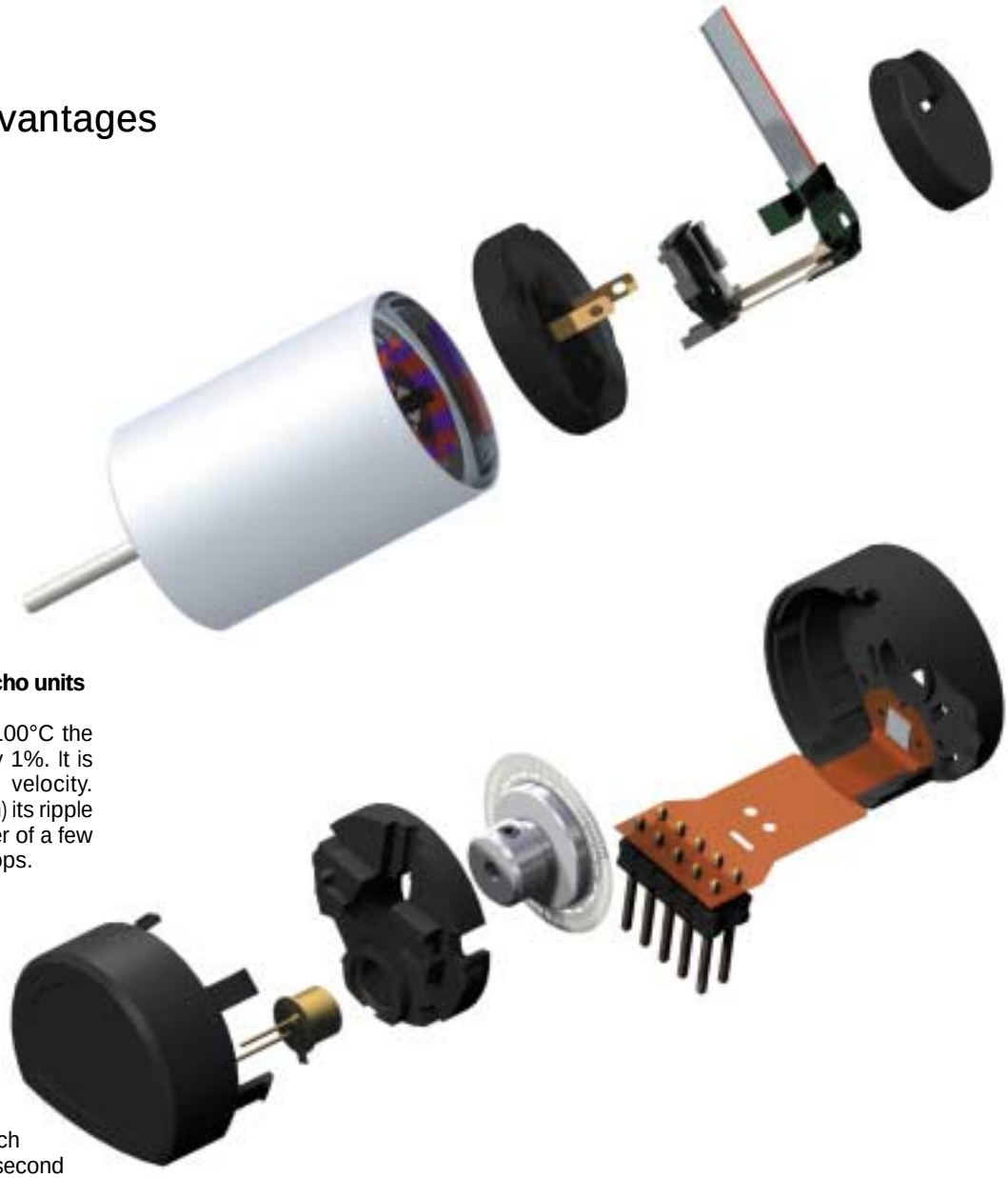

Terminology

Tachogenerators and motor-tacho units EMF
For a temperature difference of 100°C the induced voltage changes by only 1%. It is strictly proportional to angular velocity. However, at low speed (<100 rpm) its ripple could introduce errors of the order of a few percent in fast reacting speed loops.

Resonance frequency
Motor-tacho units are of remarkably high mechanical rigidity because of their common single shaft. In physical terms they represent never-the-less two masses coupled through an «elastic» shaft. Such assemblies have a naturel frequency which is stated in the data sheet and at which they tend to oscillate. There is a second resonance frequency, usually much lower, between motor and load. Applications using sequences of start-stop or reversal at those frequencies may run into trouble.

Magnetic and optical encoders Output signals
The encoder includes a circuit which transforms the sinusoidal Hall signals into two square signals. These are in quadrature, which means that there is an electrical angle of 90° between them. The phase shift allows to determine the direction of rotation, depending on which channel is leading.
The A22 optical encoder is available with integrated circuitry which directly produces a logic signal indicating the direction of rotation, as well as up-down pulses. This way, implementation of the encoder is very simple.

Standard test of escap® incremental encoders
The high quality level offered by Portescap is ensured by testing and checking throughout the manufacturing process. These tests follow a standard Quality Plan and well established procedures.

The encoder is supplied with the voltage indicated in the catalogue and the various parameters are checked at ambient temperature.

© Portescap

Motor Drive Circuits

escap® motors feature characteristics rarely found in conventional designs. For their full exploitation Portescap propose a range of suitable drive circuits. These allow a rapid yet complete evaluation of the motor and the driver in the application. At the production stage the customer may continue to use the Portescap device or make his own drive circuit. Our application engineers will be pleased to provide support.

The dynamic performance of both D.C. and stepper motors depends to a large extent on the drive circuit. Continuous torque does not; it is limited only by the motor's capability of thermal dissipation.

For stepper motors operating at low speed in half-step mode a voltage controlled L/R driver is recommended. With a current controlled driver much higher step rates are possible.

For D.C. motors, voltage control is recommended for drive applications with a well defined operating point. Current control is recommended with incremental motion and for applications requiring high mechanical power and high efficiency.

Voltage control,
D.C. motor

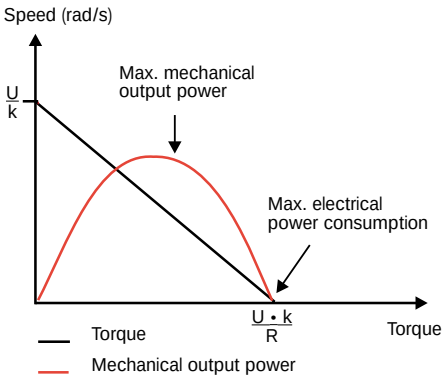

Current control,
D.C. motor

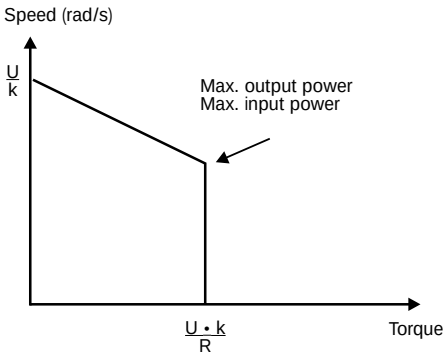

Stepper motor drive circuits
The disc magnet stepper motors manufactured by Portescap offer dynamic performance unequalled by any other stepper technology. In addition the models designed for microstep mode provide high angular accuracy. Nevertheless, care must be taken when selecting the drive circuit, to ensure optimum performance of the motor-and-driver assembly in the application.

At low speed, low resolution applications, an L/R type driver with half-step mode is usually adequate. The high starting frequency offered by disc magnet stepper motors may sometimes allow a given move without ramping; thus, simplifying the controller.

At high speed, low resolution applications, a PWM chopper driver in half-step mode often gives best results. With Portescap steppers and their short electrical time constant the chopper frequency must be high enough, such as ≈ 25 kHz. The chopper control mode should best be regenerative with high speed and non-regenerative with low speed applications.

If a very smooth movement and/or high resolution are required, microstep operation is the answer. The precise control of current levels provided by Portescap microstep drivers ensures the accuracy of motor position and a silent operation.

Holding torque of disc magnet stepper motors is determined by thermal limits rather than by saturation of the iron circuit, as long as the coil temperature does not exceed 130°C. Motor boosting is an efficient means to obtain higher torque during acceleration and braking. This feature is offered by most Portescap chopper drivers and is activated by a simple logic signal. The high peak currents help to achieve extremely fast movements.

On the other hand, if the motor is stalled and there is no more need for angular accuracy, a reduced stand-by current is suggested.

Most escap® drive circuits are protected against overheating and against short-circuits.

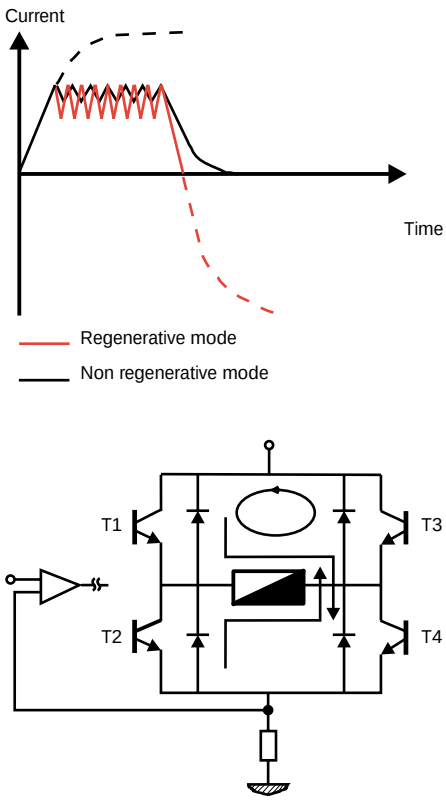

Methods of chopper control
The regenerative mode gives faster response but higher current ripple than the non-regenerative mode. A higher chopper frequency results in reduced ripple.

© Portescap

The EDM-907 microstep drive circuit provides an extremely precise control of the phase currents and, with the help of velocity sensors, offers active damping of the motor. The movement over each step of a current controlled stepper motor is described by second order differential equations. End-of-step oscillations can cause problems cases of a pure inertial load. Portescap has designed a drive using speed sensors to optimise the step response and avoid oscillations. This feedback may be activated at the end of a move, or can be used continuously during movements at low step rates.

The system is demonstrated by the EDM-907 driving a P850V motor, with V meaning that the motor has integrated velocity sensors. More information is available on request.

The different operating modes of stepper motors

Operating mode	Advantages	Limitations
Full-step or half-step mode	Simple translator	Resolution = # of steps/rev (or twice that number)
		High torque ripple may excite mechanical resonance
		Depending on the load and the motor operation, noise may be high
Microstep mode	Improved resolution	Logic is more complex
	Low torque ripple reduces resonance problems	Angular accuracy requires sophisticated current control
	Silent operation of motor and load	High step rates occupy large computing capacity

Illustration of the damping action on a disc magnet motor making 3 full steps. Shown are the 2 phase currents and the instantaneous rotor velocity. Step 1 and 2 are made without damping and show the usual ringing. Step 3, with damping activated, shows the modulation of the phase currents. Ringing is completely suppressed.

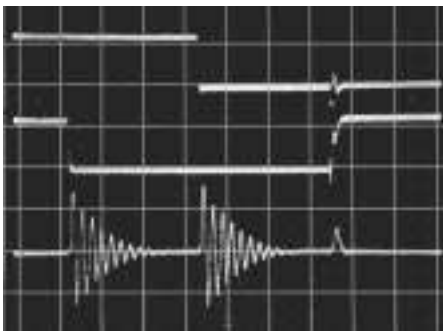

D.C. motor drive circuits
The drive circuits introduced by Portescap for the escap® D.C. motor line provide four quadrant speed control and may also be used for position control. They are specially designed to take advantage of the short electrical time constant of the motor. The ironless rotor structure gives perfect linearity of the torque constant over a wide current range. As there is no saturation effect, high peak currents give high peak torques which are needed for fast incremental motion, while at the same time there is no danger of demagnetisation of the stator magnet.

The ELD-3503 drive circuit includes a bipolar linear transconductance power stage for operation without generating electrical noise. Driver efficiency depends on the motor speed and torque. Speed may be controlled either from a tacho signal or by using the economic R x I compensation technique.

The card feature full protection against overcurrent, overtemperature, and short-circuits.

Brushless D.C. motor drive circuits
Portescap have designed an innovative technique of controlling two phase BLDC motors without a position sensor (cf. 26BC-4C motor). It is called the Tetradrive™ concept, where the ASIC 3LS provides the commutation sequence.

Demonstration circuits based on this concept are available. With such details as driver stage, speed control, current control and so forth being defined according to the needs of the application, this catalogue does not carry any «standard» version of these drive circuits.

© Portescap

The microstep mode

Basics

Consider a two phase stepper motor with a rotor having one pole pair. In that case the mechanical angle is equal to the electrical angle.

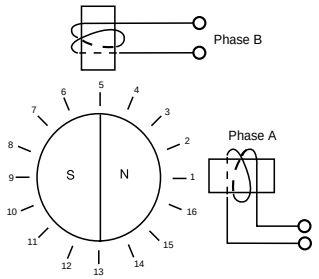

With half-step mode the energising sequence of phases A and B would be: A+, A+ and B+, B+, A- and B+, A-, A- and B-, and so forth. The corresponding target positions are: 1, 3, 5, and so forth.
In positions with both phases energised, the phase currents are reduced to $1/\sqrt{2}$ times the value of the nominal current for one-phase-on. This provides constant values of holding torque and thermal dissipation.

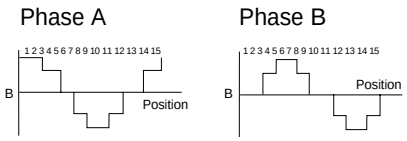

Current shape (half-step mode).

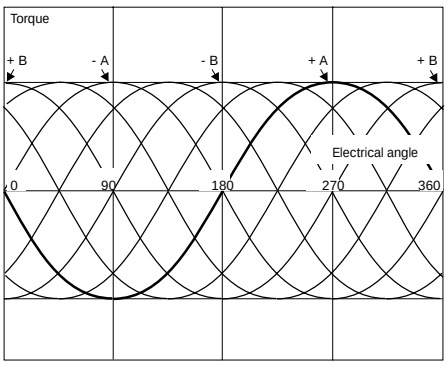

Torque as a function of rotor position and of phase currents (half-step mode).

With microstep mode (the example shows 4 microsteps per step) the phase currents are adjusted to values such that the vector sum of the magnetic fluxes generated by phase A and B corresponds to the desired target position. In case of a sine-cosine command the values of holding torque and thermal dissipation are constant all the time.

Please note:

- The microstep mode provides higher resolution but no better angular accuracy.
- The holding torque is the same with microstep, half-step or full-step mode (holding torque is constant if power dissipation from Joule losses is constant).
- To make a microstep requires less energy. This reduces torque ripple and results in a smoother movement with less resonance excitation.

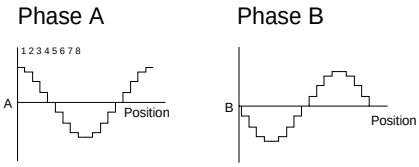

Current shape (4 microsteps per step).

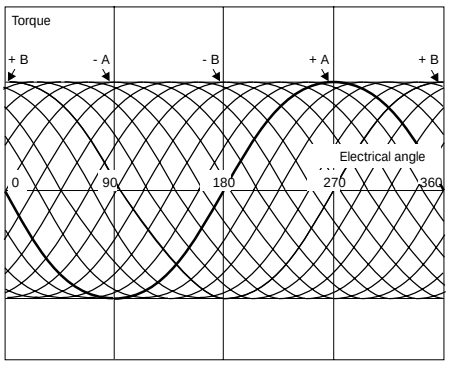

Torque as a function of rotor position and of phase currents (4 microsteps per step).

The theory

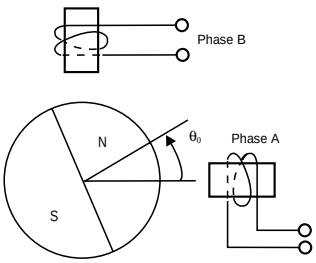

Let θ_0 be the desired microstep target position. Apparently, this requires phase currents of:

$i_A = I_0 \cos(\theta_0)$

$i_B = I_0 \sin(\theta_0)$

Phase A generates the torque:

$M_A = - k \cdot i_A \cdot \sin(\theta)$

Phase B generates the torque:

$M_B = k \cdot i_B \cdot \cos(\theta)$

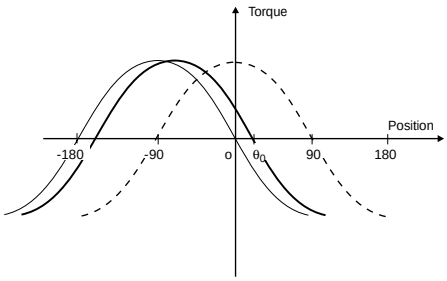

Function of the torque versus rotor position.

When replacing i_A and i_B by their respective terms the following torque equation is obtained:

$M = M_A + M_B = - k \cdot I_0 \cdot \sin(\theta - \theta_0)$

These simple calculations show that the motor torque-vs-rotor position function has to be perfectly sinusoidal if all microstep positions are to be targeted with the same accuracy and stiffness.

Furthermore, motor detent torque must be as low as possible in order not to disturb angular accuracy.

Note that disc magnet stepper motors designed for microstep operation meet these requirements.

Quite obviously, for the driver a very precise current regulation is also necessary in order to place the target positon exactly where it is supposed to be.

Conclusion

The conditions for obtaining precise positioning in microstep mode are for the motor:

- sinusoidal function of torque versus rotor position
- excellent linearity torque vs current
- no magnetic coupling between phases
- low detent torque

for the drive circuit:

- precise current control
- precise definition of sine and cosine values.

© Portescap

Memorandum

Linear movement

m	= mass	[kg]
d	= linear displacement	[m]
v	= linear speed	[m/s]
a	= linear acceleration	[m/s^2]
r	= radius	[m]
p	= pitch	[m]
η	= transmission efficiency	[–]
F	= force	[N]

Angular movement

J	= inertia	[kgm^2]
θ	= angular displacement	[rad]
ω	= angular speed	[rad/s]
α	= angular acceleration	[rad/s^2]
r	= radius	[m]
Z	= number of teeth	[–]
i	= reduction ratio	[–]
k_v	= viscous damping constant	[Nm/rad/s = Nms]
η	= transmission efficiency	[–]
M	= torque	[Nm]

Force

F	= m • a	[N]

Torque

M	= J • α	[Nm]
ΔM	= viscous damping = k_v • Δω	[Nm]

Work - Energy

W	= F • d	[Nm]

W	= M • θ	[Nm]

Mechanical power

P_m	= F • v	[W]

P_m	= M • ω	[W]

Inertia

Moment of inertia of a ring:	J	≅ m • r^2	[kgm^2]
Moment of inertia of a cylinder:	J	= $^1/_2$ m • r^2 = π/2 • r^4 • h • ρ	[kgm^2]
Moment of inertia of a hollow cylinder:	J	= $^1/_2$ m (r_1^2 + r_2^2) = π/2 • (r_1^4 - r_2^4) • h • ρ	[kgm^2]
	ρ	= specific mass [kg/m^3] h = height	[m]

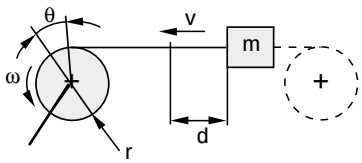

motor shaft

J = m • r^2 [kgm^2] M = F • r / η [Nm]
θ = d / r [rad]
ω = v / r [rad/s] $r_{opt.} = \sqrt{J_m/m}$ [m]
α = a / r [rad/s^2]

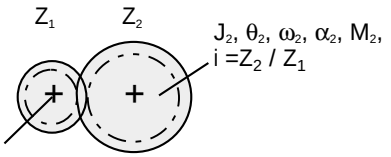

motor shaft

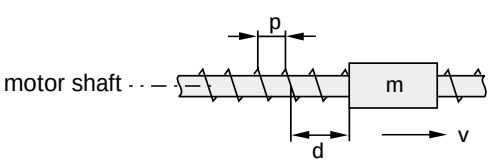

J = m (p / 2π)^2 [kgm^2] M = F • p / 2π • η [Nm]
θ = 2π • d / p [rad]
ω = 2π • v / p [rad/s] $P_{opt.} = 2\pi\sqrt{J_m/m}$ [m]
α = 2π • a / p [rad/s^2]

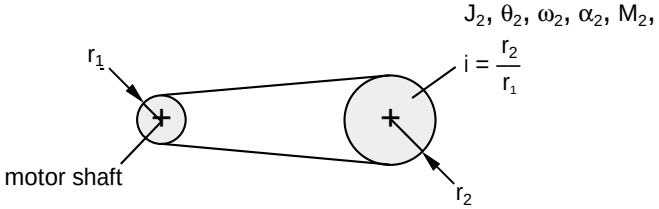

J_1 = J_2 / i^2 [kgm^2] (load inertia reflected to the motor shaft)
θ = $θ_2$ • i [rad]
$ω_1$ = $ω_2$ • i [rad/s]
$α_1$ = $α_2$ • i [rad/s^2]
M1 = M_2 / i • η [Nm]
$i_{opt.} = \sqrt{J_2/J_m}$ [–]

© Portescap

Portescap

Load Data Form

To optimize motor choice and estimate life expectancy for your application, please complete and return a photocopy of the following load data form.

Company:

Contact person:

Address:

Tel.: Fax:

Application / Function: New ☐ Existant ☐

Date: Recommended product:

Load specification

Transmission

☐ Motor shaft

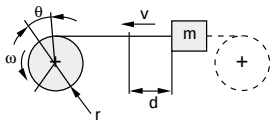

r = mm

η =

☐ Motor shaft

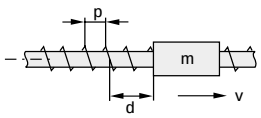

p = mm

η =

J = kgm²

☐ Motor shaft

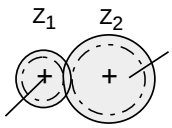

$i = \frac{Z_2}{Z_1}$ =

η =

☐ Motor shaft

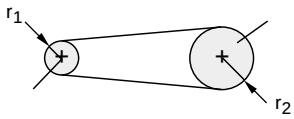

$i = \frac{r_2}{r_1}$ =

η =

☐ Other

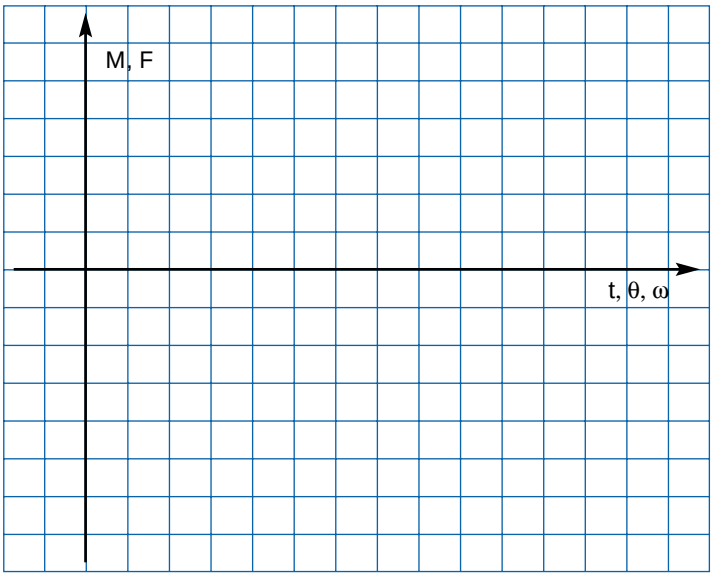

Mass = kg Inertia = kgm²

Static friction force = N Static friction torque = Nm

Load viscous force = N/m Viscous damping torque = Nms

Movement specification

Controlled parameters

Torque: ☐

Speed: ☐

Position: ☐

Trajectory: ☐

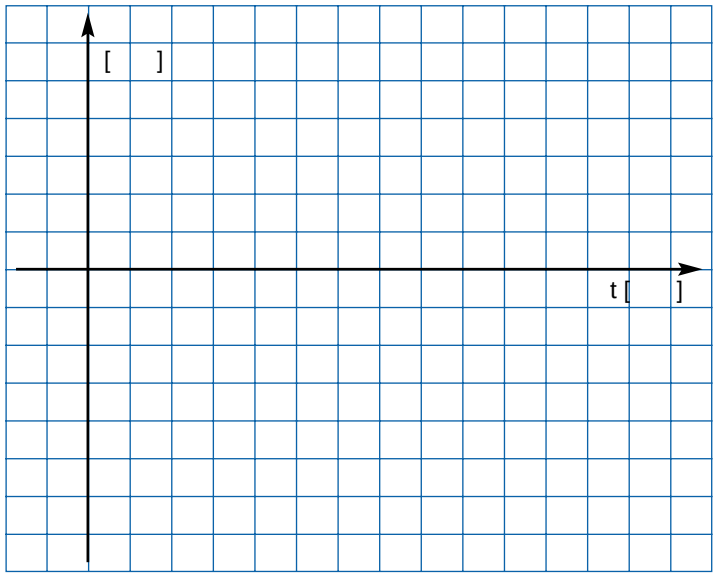

Additional constraints:

Precision = [ ]

Resolution = [ ]

Overshoot = %

Application environment

Available power supply: I_{max} = A

Voltage range = V

Available control electronics: f max = Hz

Temperature range: operational = °C storage = °C

Available space: $Ø_{max}$ = mm L_{max} = mm

Lifetime: Operating hours = Number of cycles =

Shaft load: axial = N radial = N Distance = mm

Is motor stalled? if yes, conditions: Voltage = V Current = A

© Portescap

Symbols and S.I. units

Conversion table

Symbol	Description	Unit
a	linear acceleration	m/s^2
d	linear displacement	m
f	frequency	Hz
k	torque constant	Nm/A
k_m	motor constant	$Nm/\sqrt{W}$
m	mass	kg
n	rotational speed	rpm
t	time	s
v	linear speed	m/s
B	magnetic induction	T
E	electromotive force	V
F	force	N
H	magnetic field	A/m
I	current	A
J	moment of inertia	kgm^2

Symbol	Description	Unit
L	inductance	H
M	torque	Nm
P	power	W
R	resistance	Ω
R_{th}	thermal resistance	°C/W
T	temperature	°C
U	voltage	V
W	work, energy	Nm
α	angular acceleration	rad/s^2
η	efficiency	–
θ	angular displacement	rad
τ	time constant	s
Φ	magnetic flux	Wb
ω	angular speed	rad/s

Length:	**1 in**	= 25.4	mm	**1 mm**	= 0.0393	in
	1 ft	= 0.3048	m	**1 m**	= 3.281	ft
Mass:	**1 oz**	= 0.0283	kg	**1 kg**	= 35.3	oz
	1 lb	= 0.454	kg	**1 kg**	= 2.205	lb
Force:	**1 kp**	= 9.81	N	**1 N**	= 0.102	kp
	1 oz	= 0.278	N	**1 N**	= 3.597	oz
	1 lb	= 4.45	N	**1 N**	= 0.225	lb
Temperature:	**T [°F]**	= 9/5 $T_{°C}$ +32		**T [°C]**	= 5/9 ($T_{°F}$-32)	
	0 K	= -273.15	°C	**0 °C**	= 273.15	K
Torque:	**1 kpcm**	= 0.0981	Nm	**1 Nm**	= 10.2	kpcm
	1 oz-in	= 7.06	mNm	**1 mNm**	= 0.1416	oz-in
	1 lb-in	= 0.113	Nm	**1 Nm**	= 8.849	lb-in
	1 lb-ft	= 1.356	Nm	**1 Nm**	= 0.7376	lb-ft
Inertia:	**1 gcm²**	= 1×10^{-7}	kgm^2	**1 kgm²**	= 1×10^{7}	gcm^2
	1 oz-in²	= 1.83×10^{-5}	kgm^2	**1 kgm²**	= 5.46×10^{4}	$oz\text{-}in^2$
	1 oz-in s²	= 0.00706	kgm^2	**1 kgm²**	= 141.6	oz-in s^2
	1 moiss	= 7.06×10^{-6}	kgm^2	**1 kgm²**	= 141643	moiss
	1 lb-in²	= 0.000293	kgm^2	**1 kgm²**	= 3418	$lb\text{-}in^2$
	1 lb-in s²	= 0.113	kgm^2	**1 kgm²**	= 8.85	lb-in s^2
Energy:	**1 kcal**	= 4187	J	**1 J**	= 0.239	cal
	1 Btu	= 1055	J	**1 J**	= 9.48×10^{-4}	Btu
Power:	**1 CV**	= 735	W	**1 kW**	= 1.36	CV
	1 HP	= 746	W	**1 kW**	= 1.34	HP

© Portescap

Examples of motor calculations

DIRECT DRIVE WITHOUT A GEARBOX

A load having a friction torque M of 6 mNm should be driven at a speed of 2000 rpm. The ambient temperature T_{amb} is 30°C. The voltage available is 10 V.
The escap® motor table shows the type 22N to be the smallest motor capable of delivering a torque of 6 mNm continuously. Let's take the model 22N 28-213E.201, which has a measuring voltage of 9V. The characteristics we are mostly interested in are the torque constant k of 12.5 mNm/A and the resistance at 22°C of 10.3 Ω. Neglecting the no-load current, for a torque of 6 mNm the motor current is:

$$I = \frac{M}{k} \qquad \text{[A] (1)}$$

$$I = \frac{6}{12.5} = 0.48 \text{ A}$$

We can now calculate the drive voltage required by the motor, at 22°C, for running at 2000 rpm with a load torque of 6 mNm:

$$U = R \cdot I + k \cdot \omega \qquad \text{[V] (2)}$$

$$\omega = 2\pi \cdot \frac{n}{60} \qquad \text{[rad/s] (3)}$$

$$U = 10.3 \cdot 0.48 + 12.5 \cdot 10^{-3} \cdot 209.4 = 7.56 \text{ V}$$

We note that the current of 0.48 A is quite close to the rated continuous current of 0.62 A. We should therefore calculate the final rotor temperature (T_r) to make sure it stays below the rated value of 100°C and the voltage required is within the 10 V available. In the formulas, P_{diss} is the dissipated power, R_{Tr} is the rotor resistance at the final temperature and α is the thermal coefficient of the copper wire resistance:

$$\Delta T = T_r - T_{amb} = P_{diss} \cdot R_{th} \qquad \text{[°C] (4)}$$

$$P_{diss} = R_{Tr} \cdot I^2 \qquad \text{[W] (5)}$$

$$R_{Tr} = R_{22} \cdot (1 + \alpha (T_r - 22)) \qquad \text{[Ω] (6)}$$

$$\alpha = 0.0039 \qquad \text{[1/°C] (7)}$$

$$R_{th} = R_{th1} + R_{th2} \qquad \text{[°C/W] (8)}$$

The catalogue values for the thermal resistance rotor-body and body-ambient are 5°C/W and 20°C/W, respectively. They are indications for unfavourable conditions. Under «normal» operating conditions (motor mounted to a metal surface, with air circulating around it) we may take half the value for R_{th2}.

By solving equations (4) (5) and (6), we obtain the final rotor temperature T_r:

$$T_r = \frac{R_{22} \cdot I^2 \cdot R_{th} \cdot (1\text{-}22\ \alpha) + T_a}{1 - \alpha \cdot R_{22} \cdot I^2 \cdot R_{th}} \qquad (9)$$

With a current of 0.48 A the rotor reaches a temperature of:

$$T_r = 72.6°C$$

At that temperature and according to equation (6), the rotor resistance is R_{72} = 12.33 Ω, and we need a drive voltage of 8.5 V. The motor requires an electrical power of 4.1 W.
The problem is now solved. In case the application requires a particularly long motor life, use of the next larger motor (type 22V) could possibly also be considered.

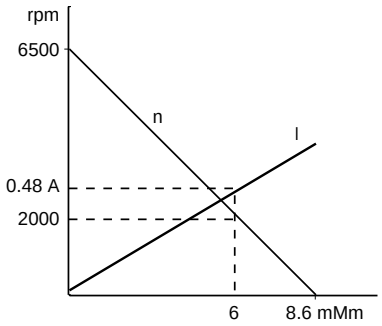

Speed/torque and current/torque lines of the 22N28-213E motor at 68.4°C and for 8.5 V.

The behaviour and basic equations of ironless rotor D.C. motors is described in detail in the technical publication Think escap® 1.

DRIVE USING A GEARBOX

A load with a friction torque of 0.5 Nm should be driven at a speed of 30 rpm.
The gearbox table shows this torque is within the rating of the R22 gearbox. When choosing the reduction ratio we keep in mind that the input speed of the R22 should remain below 5000 rpm in order to assure low wear and low noise emission:

$$i \leq \frac{n_{max}}{n_{ch}} \qquad \text{[-] (10)}$$

$$i \leq \frac{5000}{30} = 166.7$$

The catalogue indicates a closest ratio of 111:1, the efficiency being 0.6 (or 60%). We may now calculate the motor speed and torque:

$$M_m = \frac{M_{ch}}{i \cdot \eta} \qquad \text{[Nm] (11)}$$

$$M_m = \frac{0.5}{111 \cdot 0.6} = 7.5 \cdot 10^{-3} \text{ Nm} = 7.5 \text{ mNm}$$

$$n_m = n_{ch} \cdot i \qquad \text{[rpm] (12)}$$

$$n_m = 30 \cdot 111 = 3330 \text{ rpm}$$

The motor table shows the 22V motor can deliver 7.5 mNm permanently. The 22V is available as a standard combination with this gearbox. After choosing a winding we calculate the motor current and voltage the same way as in the preceding example.
A very simple graphic procedure of selecting a motor-gearbox unit is presented in the technical publication Think escap® 6.

DRIVE WITH A D.C. MOTOR USING ELECTRONIC COMMUTATION

A torque of 3 mNm is required at a speed of 10 000 rpm, with a life time beyond 15 000 hours. Quite obviously, the best choice is a motor using electronic commutation.
The speed/torque curves show the 26BC-6A-113.101 motor to be able of doing the job. It has an integrated drive circuit, consuming 18 mA which are included in the no-load current. Now let's calculate the necessary current and voltage. The relevant catalogue values are:

equivalent impedance: 6.8 W
torque constant: 9.2 mNm/A
no-load current at 13400 rpm: 110 mA
viscous torque constant: 0.4 · 10-6 Nms

The «equivalent impedance» is the impedance at any two of the three winding terminals. It cannot be measured from outside because of the presence of the driver transistors.
The change in friction caused by a speed change is given by the viscous damping constant k_v:

$$k_v = \frac{\Delta M_f}{\Delta \omega} \qquad \text{[Nm/rad/s = Nms] (13)}$$

© Portescap

The load torque of 3 mNm requires a current of I = 0.326 A (see formula 1).
The drop in viscous torque due to the lower speed of 10 000 rpm vs 13 400 rpm amounts to:

$\Delta M_f = k_v \cdot \Delta\omega = 0.4 \cdot 10^{-6} \cdot 356 = 0.14$ mNm

This results in a drop in no-load current of 15 mA.
At 10 000 rpm we have:

110 - 15 = 95 mA

When adding them to the load current we arrive at approximately 0.42 A. The rated continuous current of this motor is 0.45 A as defined by the internal overload protection.

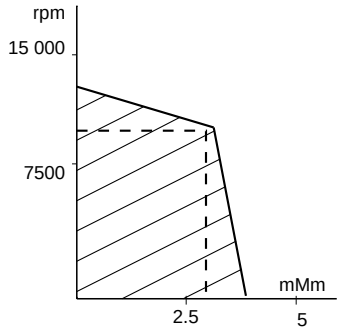

Rated working range of the 26BC-A-113 motor and point of actual operation.

The voltage follows formula (2), the voltage drop across the power stage being negligible:

$U = R \cdot I + k \cdot \omega + u = 2.87 + 9.63 = 12.5$ V

As the drive circuit supply voltage may be from 5V to 18V, the pins 2 and 5 may be hooked together and connected to 12.5 V. If the motor operates but in one direction and there is no speed control, the two wire motor version 26BC-2A offers the simplest solution.

POSITIONING WITH A D.C. MOTOR
A load inertia of $20 \cdot 10^{-7}$ kgm^2 must be moved by an angle of 1 rad in 20 ms. Friction is negligible, ambient temperature is 40°C. With this incremental application we consider a duty cycle of 100% and a triangular speed profile.

Then the motor must rotate 0.5 rad in 10 ms whilst accelerating, then another 0.5 rad in 10 ms whilst braking.

Let's calculate the angular acceleration α:

$$\alpha = \frac{2\theta}{t^2} \qquad [\text{rad/s}^2] \ (14)$$

$$\alpha = \frac{2 \cdot 0.5}{0.01^2} = 10\,000 \text{ rad/s}^2$$

The torque necessary to accelerate the load is:

$M_{ch} = J_{ch} \cdot \alpha$ [Nm] (15)

$M_{ch} = 20 \cdot 10^{-7} \cdot 10\,000 = 20$ mNm

If the motor inertia equalled the load inertia, torque would be twice that value. We then talk of matched inertias, where the motor does the job with the least power dissipation.

If we consider that case, motor torque becomes:

$M_m = (J_{ch} + J_m) \cdot \alpha$ [Nm] (16)

$M_m = 2 \cdot M_{ch} = 40$ mNm

According to the motor overview the type 28DT12 can deliver 40 mNm permanently. As an example, take the -222E coil with a resistance (at 22°C) of 6.2 W and a torque constant of 32.5 mNm/A. Consider a total thermal resistance of the order of 7.5°C/W. The rotor inertia happens to be just $20 \cdot 10^{-7}$ kgm^2.

From equation (1) we get:

$$I = \frac{M}{k} = \frac{40}{32.5} = 1.23 \text{ A}$$

Equations (9) and (4) give:

$T_r = 143$°C, $R_{Tr} = 9.68\ \Omega$

For the triangular profile we then calculate the motor peak speed:

$\omega_{max} = \alpha \cdot t$ [rad/s] (17)

$\omega_{max} = 10\,000 \cdot 0.01 = 100$ rad/s

According to equation (3), this gives:

$n_{max} = 955$ rpm

Finally, we apply equation (2):

$U = R \cdot I + k \cdot \omega$
$= 9.05 \cdot 1.23 + 32.5 \cdot 10^{-3} \cdot 100$
$= 15.2$ V

This is the minimum output voltage required by a chopper driver.

A different way of selecting the motor is presented in the technical publication Think escap® 6.

© Portescap

POSITIONING WITH A STEPPER MOTOR

A load inertia of $20 \cdot 10^{-7}$ kg m^2 has to be moved by an angle of 0,5 rad in 20 ms.
With a triangular speed profile this requires a torque of 10 mNm up to a peak speed of 50 rad/s as calculated using equations (14) and (15). At that speed the mechanical power for the load alone is 0.5 W. Now we can evaluate the motor size necessary, and we see two possible solutions.

Direct drive

The motor type P430 (100 steps/rev, 60 mNm of holding torque) associated to a simple L/R type driver is quite enough for this application, as peak speed is only 50 rad/s:

$$\frac{50}{2\pi} \cdot 100 = 796 \text{ steps/s}$$

Let's see whether the move can be done within the motor's pull-in range. Then we would not need to generate ramps for acceleration and deceleration, and the controller would be substantially simplified. In that case we have in fact a rectangular speed profile and the move requires a constant step rate which is obtained by dividing the distance (number of steps which is 8) by the time:

$$\frac{0.5 \cdot 100}{2\pi \cdot 0.02} = 400 \text{ steps/s}$$

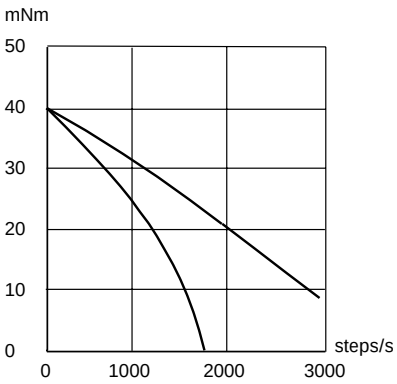

Curves of torque vs step rate for the P430 with ELD-200 drive circuit.

We must make sure the motor can start at that frequency. The curves on page 53 show that, with a load inertia equal to the rotor inertia of 3 gcm^2, the motor can start at about 1700 steps/s. With a load inertia of $20 \cdot 10^{-7}$ kg m^2 this pull-in frequency becomes:

$$f_1 = f_0 \sqrt{\frac{2J_m}{J_m + J_{ch}}} \qquad \text{[Hz] (18)}$$

$$f_1 = 1700 \cdot \sqrt{\frac{6}{23}} = 870 \text{ steps/s}$$

Thanks to the disc magnet technology the P430 motor can do the job quite easily, without needing a ramp, using a very simple controller and an economic driver.

Use of a gearbox

The P310 motor makes 60 steps/rev and has a holding torque of 12 mNm at nominal current. This is too small for moving the load in a direct drive. However, its mechanical power is more than enough. A reduction gearbox can adapt the requirements of the application to the motor capabilities.

Choosing the reduction ratio

A first choice consists of matching inertias and then make sure that with that ratio the motor speed remains within a reasonable range, where the necessary torque can be delivered. With incremental motion, an inertial match assures the shortest move time, with the motor providing constant torque over the speed range considered. In our example this asks for a ratio i_0 of:

$$i_0 = \sqrt{\frac{J_{ch}}{J_m}} \qquad \text{[-] (19)}$$

$$i_0 = \sqrt{\frac{20}{0.86}} = 4.82$$

From the various gearbox models proposed for the P310 we pick the K24, which offers a smallest ratio of 5:1. Using equations (14), (15) and (19), we find:

- a load inertia reflected to the motor shaft of $1 \cdot 10^{-7}$ kg m^2
- a motor acceleration of 25 000 rad/s^2
- a motor peak speed of 250 rad/s = 2400 rpm = 2400 steps/s
- a necessary motor torque of 5 mNm.

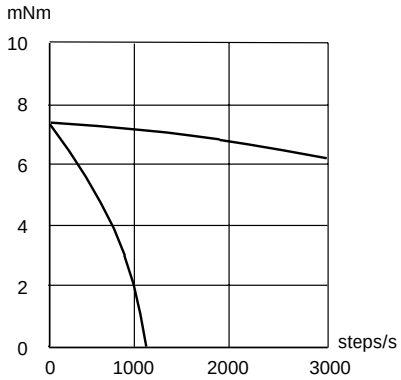

Curves of torque vs step rate for the P310 with ELD-200 drive circuit.

With the ELD-200 drive circuit at 24V the motor P310-158 005, coils in parallel, can do the job with an adequate safety margin. At low step rates the available torque is substantially above the 5 mNm required for the triangular speed profile. By adapting this profile to the motor capabilities the move time can be further reduced.

The smaller P110 motor with R16 gearbox could also do the job but would require a driver of very high performance and carrying a higher price tag.

A detailed description of the disc magnet stepper motor technology is given in the technical publication Think escap® 5.

© Portescap

Designation of ironless rotor D.C. motors

22 N 2R 28 -210E D 16 .201

- Motor diameter in mm
- Code for motor length
- Indication for ball bearings
- Commutation system
- Winding type
- Encoder type
- Number of lines of encoder
- Motor execution code

Designation of stepper motors

P X 5 3 2 -25 8 012 14 V

- Stepper motor
- Internal code
- Code for diameter
- Code for length
- Motor version for full/half-step = 2
- Motor version for microstep = 0
- Number of rotor pole pairs
- Number of connections or terminal wires
- Resistance per winding (indicated by a letter for some motors)
- Motor execution code
- Particular option

Designation of BLDC motors, slotless iron structure

26 BC 6 A 107 .101

- Motor diameter
- Technology
- Number of terminal wires
- Commutation system
- Winding type
- Execution code

Designation of BLDC motors, slotted iron structure

B 0508 -050A -R 0 G 05 F

- Motor type (B = Brushless motor)
- Diameter & length in inches (0508 = 0.5” D x 0.8” L)
- Nominal voltage (050A/050B/150A/150B)
- Motor shaft options (R = round, F = flat, D = double, O = gearhead)
- Mounting options (0 = threads, 1 = servo groove, 2/3/4 = screw diamond/triangle/square)
- Configuration (M = just motor, G = gearhead)
- Gear ratio (05 = 5:1)
- Gearhead shaft options (R = round, F = flat, D = double)

Example of gearboxes designation

R 22 0- 190

- Gearbox type
- Gearbox diameter in mm
- Gearbox execution code
- Reduction ratio

Example of gearmotors designation

M 707L61-207 10.7 .0

- Gearmotor
- Motor type and definition
- Reduction ratio
- Gearmotor execution code

© Portescap

escap® DC Motor data sheet section



Table of contents

Motor type	page
08GS	44
08G	45
13N	46
16C	47
16N	48
16G	49
17S	50
17N	51
22S28	52
22S48	53
22N28	54
22N48	55
22V28	56
22V48	57
23LT12	58
23V	59
23DT	60
26N	61
28L28	62
28LT	63
28D	64
28DT12	65
34L11	66
35NT2R32	67
35NT2R82	68
Ex-proof motors EEX	69
Autoclavable motors	69
High speed motors	69
ELD-3503 drive circuit	70

© Portescap

escap 08GS61

Precious metal commutation system - 5 segments

D.C. Motor 0.5 Watt

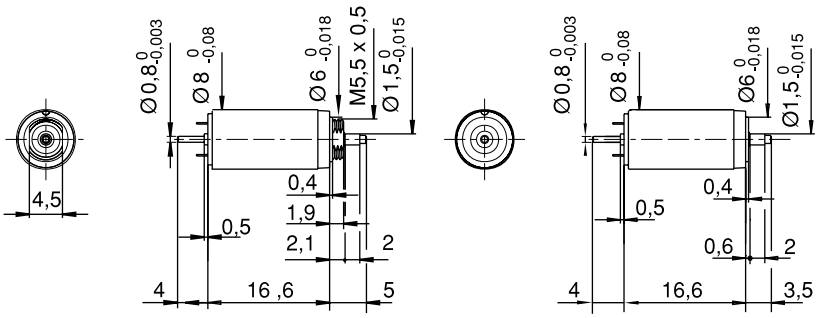

scale: 1:1
dimensions in mm
mass: 3.8 g

08GS61 •••• • 1

08GS61 •••• • 2

Winding types	••••	-107	-105	-105C	-204
Measured values					
1 Measuring voltage	V	2	4.5	6	9
2 No-load speed	rpm	9500	10700	11000	10700
3 Stall torque	mNm (oz-in)	0.3 (0.042)	0.59 (0.084)	0.59 (0.084)	0.63 (0.089)
4 Average no-load current	mA	8	4	3	2
5 Typical starting voltage	V	0.2	0.3	0.5	0.6
Max. recommended values					
6 Max. continuous current	A	0.25	0.168	0.128	0.087
7 Max. continuous torque	mNm (oz-in)	0.46 (0.065)	0.64 (0.091)	0.63 (0.089)	0.67 (0.095)
8 Max. angular acceleration	10^3 rad/s^2	641	859	849	889
Intrinsic parameters					
9 Back-EMF constant	V/1000 rpm	0.2	0.41	0.53	0.82
10 Torque constant	mNm/A (oz-in/A)	1.91 (0.27)	3.92 (0.55)	5.1 (0.72)	7.8 (1.11)
11 Terminal resistance	ohm	12.6	30	52	111
12 Motor regulation R/k^2	10^3/Nms	3500	2000	2000	1800
13 Rotor inductance	mH	0.05	0.11	0.2	0.45
14 Rotor inertia	kgm^2 . 10^{-7}	0.03	0.03	0.03	0.03
15 Mechanical time constant	ms	10	5.9	6.1	5.4

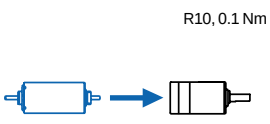

- Thermal resistance:
  rotor-body 20°C/W
  body-ambient 100°C/W
- Thermal time constant rotor/stator: 5 s/100s
- Max. rated coil temperature: 100°C
- Recom. ambient temperature range:
  -30°C to +65°C (-22°F to +150°F)
- Max. axial static force: 30 N
- End play: ≤ 100 µm
  Radial play: ≤ 15 µm
  Shaft runout: ≤ 10 µm
- Max. side load at 2 mm from mounting face:
  - sleeve bearings 0.5 N
- Motor fitted with sleeve bearings

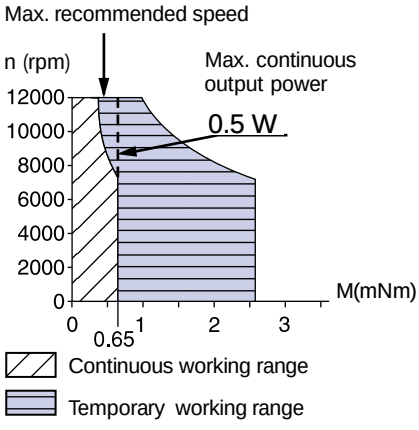

© Portescap

Specifications subject to change without prior notice

escap 08G61

Precious metal commutation system - 5 segments

D.C. Motor 0.7 Watt

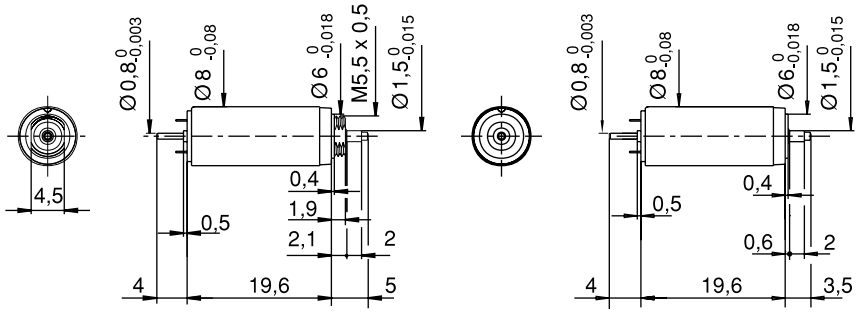

scale: 1:1
dimensions in mm
mass: 4.5 g

08G61 •••• • 1

08G61 •••• • 2

Winding types	••••	-107	-106	-105	-205C	-204
Measured values						
1 Measuring voltage	V	3	4.5	6	9	12
2 No-load speed	rpm	9800	10300	10300	11800	10400
3 Stall torque	mNm (oz-in)	0.73 (0.103)	0.87 (0.123)	0.88 (0.125)	1.01 (0.143)	0.86 (0.122)
4 Average no-load current	mA	6	4.2	3.2	2.5	1.6
5 Typical starting voltage	V	0.2	0.3	0.5	0.6	0.8
Max. recommended values						
6 Max. continuous current	A	0.25	0.21	0.163	0.124	0.081
7 Max. continuous torque	mNm (oz-in)	0.7 (0.99)	0.85 (0.12)	0.87 (0.123)	0.87 (0.123)	0.86 (0.122)
8 Max. angular acceleration	10^3 rad/s^2	924	989	989	999	979
Intrinsic parameters						
9 Back-EMF constant	V/1000 rpm	0.3	0.43	0.57	0.75	1.13
10 Torque constant	mNm/A (oz-in/A)	2.86 (0.406)	4.11 (0.58)	5.4 (0.77)	7.2 (1.01)	10.8 (1.53)
11 Terminal resistance	ohm	11.8	21.3	36.8	64	150
12 Motor regulation R/k^2	10^3/Nms	1400	1300	1200	1200	1300
13 Rotor inductance	mH	0.03	0.07	0.12	0.16	0.47
14 Rotor inertia	kgm^2. 10^{-7}	0.035	0.035	0.035	0.035	0.035
15 Mechanical time constant	ms	5	4.4	4.3	4.4	4.5

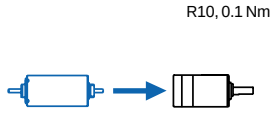

- Thermal resistance:
  rotor-body 18°C/W
  body-ambient 85°C/W
- Thermal time constant rotor/stator: 5 s/100 s
- Max. rated coil temperature: 100°C
- Recom. ambient temperature range:
  -30°C to +65°C (-22°F to +150°F)
- Max. axial static force: 30 N
- End play: ≤ 100 µm
  Radial play: ≤ 15 µm
  Shaft runout: ≤ 10 µm
- Max. side load at 2 mm from mounting face:
  - sleeve bearings 0.5 N
- Motor fitted with sleeve bearings

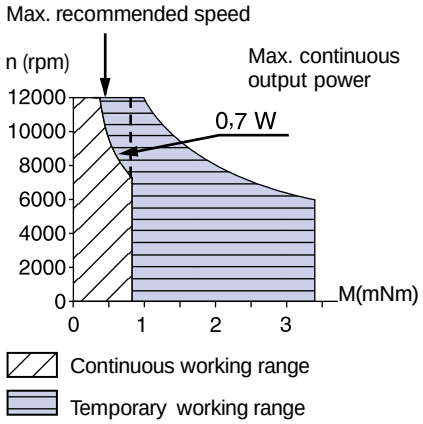

© Portescap

Specifications subject to change without prior notice

escap 13N88

Precious metal commutation system - 9 segments

D.C. Motor 2.5 Watt

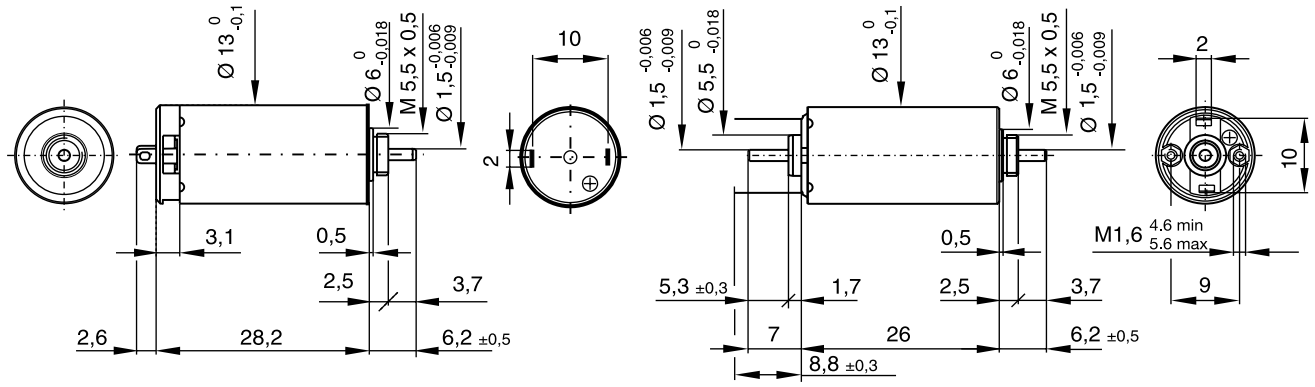

scale: 1:1
dimensions in mm
mass: 18 g

13N88 •••• • 1 13N88 •••• • 3

Winding types	••••	-216P	-216E	-213E	-110	-108	-107
Measured values							
1 Measuring voltage	V	2.0	4.5	6.0	12.0	15.0	24.0
2 No-load speed	rpm	9000	10800	12300	12400	12400	14100
3 Stall torque	mNm (oz-in)	6.9 (0.98)	7.2 (1.02)	6.5 (0.93)	8 (1.13)	6.5 (0.91)	8.4 (1.19)
4 Average no-load current	mA	48.0	26.4	25.6	13.6	10.6	8.8
5 Typical starting voltage	V	0.03	0.06	0.08	0.10	0.15	0.20
Max. recommended values							
6 Max. continuous current	A	1.50	0.90	0.69	0.38	0.27	0.21
7 Max. continuous torque	mNm (oz-in)	3.0 (0.43)	3.42 (0.48)	3.03 (0.43)	3.33 (0.47)	2.99 (0.42)	3.18 (0.45)
8 Max. angular acceleration	10^3 rad/s^2	242	225	271	252	288	274
Intrinsic parameters							
9 Back-EMF constant	V/1000 rpm	0.22	0.41	0.48	0.95	1.19	1.67
10 Torque constant	mNm/A (oz-in/A)	2.10 (0.30)	3.92 (0.55)	4.58 (0.65)	9.1 (1.28)	11.4 (1.61)	15.9 (2.26)
11 Terminal resistance	ohm	0.61	2.45	4.20	13.7	26.4	45.6
12 Motor regulation R/k^2	10^3/Nms	138	160	200	166	204	179
13 Rotor inductance	mH	0.01	0.05	0.07	0.25	0.40	0.80
14 Rotor inertia	kgm^2 . 10^{-7}	0.38	0.38	0.28	0.33	0.26	0.29
15 Mechanical time constant	ms	5	6	6	5	5	5

Availability: see enclosed document at the end of the catalogue

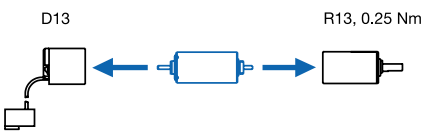

- Thermal resistance:
  rotor-body 10°C/W
  body-ambient 40°C/W
- Thermal time constant - rotor / stator:
  6 s / 300 s
- Max. rated coil temperature: 100°C (210°F)
- Recom. ambient temperature range:
  -30°C to +65°C (-22°F to +150°F)
- Viscous damping constant:
  0.04 x 10^{-6} Nms
- Max. axial static force for press-fit: 150 N
- End play: ≤ 150 µm
  Radial play: ≤ 30 µm
  Shaft runout: ≤ 10 µm
- Max. side load at 5 mm from mounting face:
  - sleeve bearings 1.5 N
- Motor fitted with sleeve bearings
  (ball bearings optional)

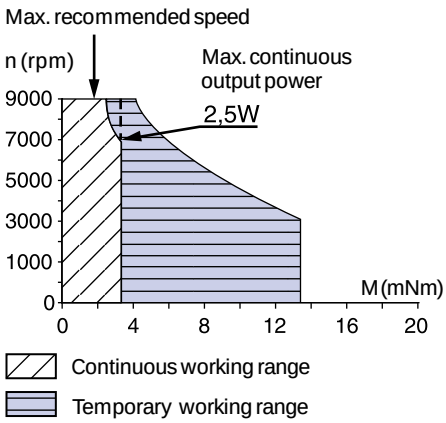

© Portescap

Specifications subject to change without prior notice

escap 16C18

Precious metal commutation system - 5 segments

D.C. Motor 0.85 Watt

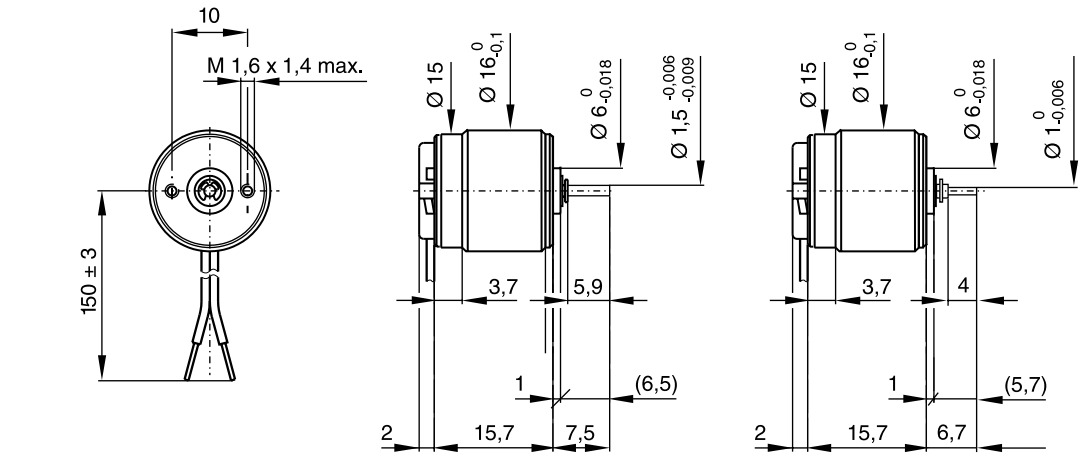

scale: 1:1
dimensions in mm
mass: 13 g

16C18 •••• • 30

16C18 •••• • 67

Winding types	••••	-115	-210	-207	-205	-204
Measured values						
1 Measuring voltage	V	1.5	4.0	6.0	12.0	15.0
2 No-load speed	rpm	15300	14700	15700	16200	16000
3 Stall torque	mNm (oz-in)	1.1 (0.16)	1.3 (0.19)	1.1 (0.16)	1.2 (0.17)	0.8 (0.11)
4 Average no-load current	mA	74.8	23.0	18.4	10.4	6.9
5 Typical starting voltage	V	0.04	0.05	0.10	0.15	0.25
Max. recommended values						
6 Max. continuous current	A	1.19	0.48	0.31	0.16	0.10
7 Max. continuous torque	mNm (oz-in)	0.98 (0.14)	1.12 (0.16)	1.0 (0.14)	1.0 (0.14)	0.79 (0.11)
8 Max. angular acceleration	10^3 rad/s^2	79	69	92	62	73
Intrinsic parameters						
9 Back-EMF constant	V/1000 rpm	0.092	0.26	0.36	0.70	0.87
10 Torque constant	mNm/A (oz-in/A)	0.88 (0.12)	2.48 (0.35)	3.44 (0.49)	6.68 (0.95)	8.3 (1.18)
11 Terminal resistance	ohm	1.20	7.5	18.0	65.0	162
12 Motor regulation R/k^2	10^3/Nms	1555	1217	1523	1455	2347
13 Rotor inductance	mH	0.02	0.15	0.25	1.00	2.00
14 Rotor inertia	kgm^2 . 10^{-7}	0.31	0.41	0.27	0.41	0.27
15 Mechanical time constant	ms	48	50	41	60	63

Availability: see enclosed document at the end of the catalogue

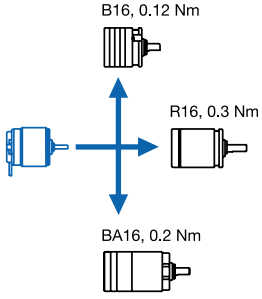

- Thermal resistance:
  rotor-body 15°C/W
  body-ambient 40°C/W
- Thermal time constant - rotor / stator:
  4 s / 230 s
- Max. rated coil temperature: 100°C (210°F)
- Recom. ambient temperature range:
  -30°C to +65°C (-22°F to +150°F)
- Viscous damping constant:
  0.04 x 10^{-6} Nms
- Max. axial static force for press-fit: 150 N
- End play: ≤ 150 µm
  Radial play: ≤ 30 µm
  Shaft runout: ≤ 10 µm
- Max. side load at 5 mm from mounting face:
  - sleeve bearings 0.5 N
  - ball bearings 3 N
- Motor fitted with sleeve bearings
  (ball bearings optional)

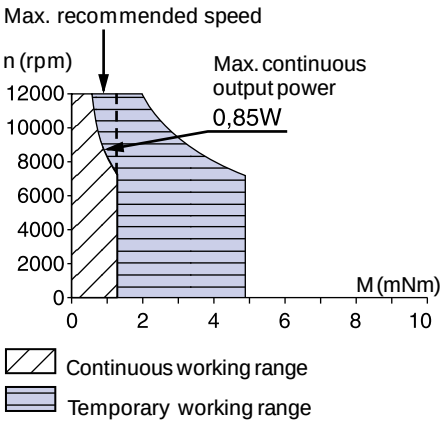

© Portescap

Specifications subject to change without prior notice

escap 16N28 & 16N38

Precious metal commutation system - 9 segments

D.C. Motor 1.7 Watt

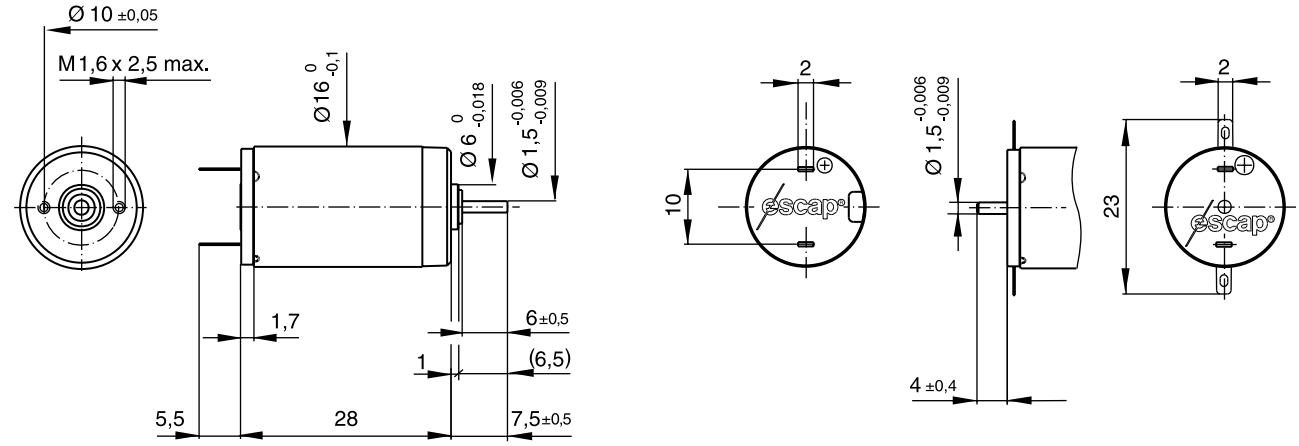

scale: 1:1
dimensions in mm
mass: 24 g

16N28••••• 201

16N38••••• 213

Winding types	••••	-114	-210E	-208E	-207E	-106	-205E
Measured values							
1 Measuring voltage	V	4.0	7.5	9.0	12.0	16.0	18.0
2 No-load speed	rpm	8900	9700	8900	10800	10200	9600
3 Stall torque	mNm (oz-in)	4.1 (0.6)	3.9 (0.55)	3.1 (0.45)	3.1 (0.45)	3.4 (0.5)	2.9 (0.4)
4 Average no-load current	mA	18.9	13.3	8.4	7.7	6.3	4.9
5 Typical starting voltage	V	0.06	0.15	0.2	0.3	0.4	0.45
Max. recommended values							
6 Max. continuous current	A	0.77	0.42	0.29	0.24	0.19	0.15
7 Max. continuous torque	mNm (oz-in)	3.2 (0.45)	2.9 (0.4)	2.7 (0.4)	2.4 (0.35)	2.7 (0.4)	2.5 (0.35)
8 Max. angular acceleration	10^3 rad/s^2	102	94	108	120	125	113
Intrinsic parameters							
9 Back-EMF constant	V/1000 rpm	0.44	0.75	1.0	1.1	1.5	1.8
10 Torque constant	mNm/A (oz-in/A)	4.2 (0.6)	7.2 (1.0)	9.5 (1.35)	10.3 (1.45)	14.6 (2.05)	17.3 (2.45)
11 Terminal resistance	ohm	4.1	14	28	40.5	68.5	109
12 Motor regulation R/k^2	10^3/Nms	230	270	310	380	320	360
13 Rotor inductance	mH	0.21	0.5	0.8	0.9	2	3
14 Rotor inertia	kgm^2 . 10^{-7}	0.77	0.77	0.63	0.51	0.53	0.55
15 Mechanical time constant	ms	18	21	20	19	17	20

Availability: see enclosed document at the end of the catalogue

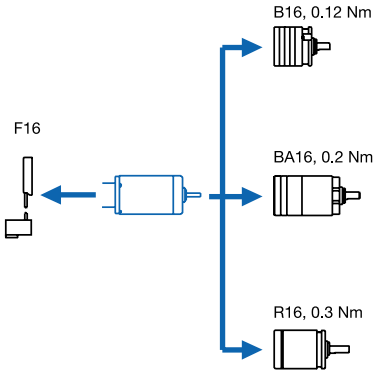

- Thermal resistance:
  rotor-body 7°C/W
  body-ambient 28°C/W
- Thermal time constant - rotor / stator:
  7 s / 390 s
- Max. rated coil temperature: 100°C (210°F)
- Recom. ambient temperature range:
  -30°C to +65°C (-22°F to +150°F)
- Viscous damping constant:
  0.04 x 10^{-6} Nms
- Max. axial static force for press-fit: 100 N
- End play: ≤ 150 µm
  Radial play: ≤ 30 µm
  Shaft runout: ≤ 10 µm
- Max. side load at 5 mm from mounting face:
  - sleeve bearings 1.5 N
  - ball bearings 3 N
- Motor fitted with sleeve bearings
  (ball bearings optional)
- With rear output shaft, the no-load current is 50% higher

Max. recommended speed

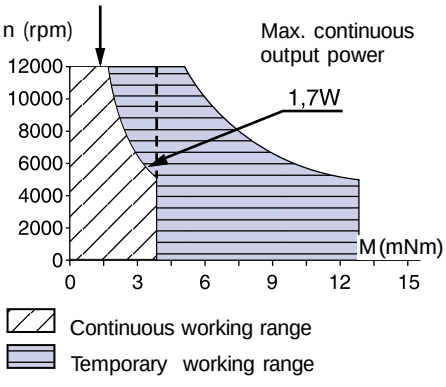

© Portescap

Specifications subject to change without prior notice

escap 16G88

Precious metal commutation system - 9 segments

D.C. Motor 4.5 Watt

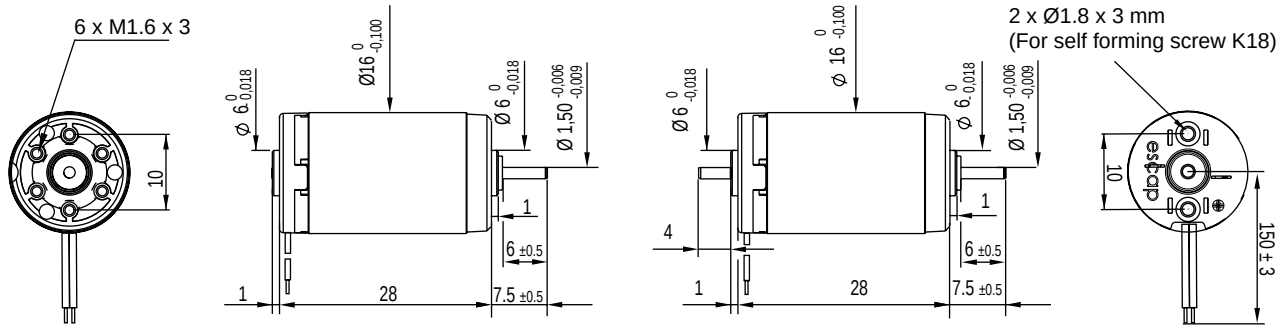

scale: 1:1
dimensions in mm
mass: 24 g

16G88 •••• • 1

16G88 •••• • 2

Winding types	••••	-220P	-220E	-213E	-211E	-210E	-208E
Measured values							
1 Measuring voltage	V	3	6	9	12	15	24
2 No-load speed	rpm	11000	11700	8200	9700	9100	11300
3 Stall torque	mNm (oz-in)	19.4 (2.7)	18.3 (2.6)	12.3 (1.74)	11.2 (1.59)	11.6 (1.64)	12.4 (1.76)
4 Average no-load current	mA	45	24	14	10	9	6
5 Typical starting voltage	V	0.02	0.03	0.06	0.07	0.1	0.2
Max. recommended values							
6 Max. continuous current	A	2.3	1.15	0.53	0.41	0.33	0.23
7 Max. continuous torque	mNm (oz-in)	5.8 (0.82)	5.5 (0.78)	5.3 (0.75)	4.7 (0.67)	5 (0.71)	4.5 (0.64)
8 Max. angular acceleration	10^3 rad/s^2	155	146	142	125	131	122
Intrinsic parameters							
9 Back-EMF constant	V/1000 rpm	0.27	0.51	1.08	1.23	1.62	2.1
10 Torque constant	mNm/A (oz-in/A)	2.58 (0.365)	4.87 (0.69)	10.3 (1.46)	11.7 (1.66)	15.5 (2.19)	20.1 (2.84)
11 Terminal resistance	ohm	0.4	1.6	7.56	12.5	20.1	39
12 Motor regulation R/k^2	10^3/Nms	60	67	71	91	84	97
13 Rotor inductance	mH	0.01	0.045	0.14	0.26	0.35	0.72
14 Rotor inertia	kgm^2 . 10^{-7}	1.5	1.5	1.5	1.5	1.5	1.5
15 Mechanical time constant	ms	9	10	11	14	13	15

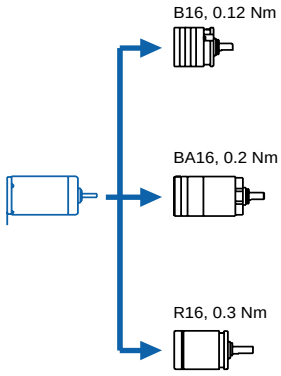

- Thermal resistance:
  rotor-body 8°C/W
  body-ambient 35°C/W
- Thermal time constant - rotor / stator:
  6 s / 500 s
- Max. rated coil temperature: 100°C (210°F)
- Recom. ambient temperature range:
  -30°C to +65°C (-22°F to +150°F)
- Viscous damping constant:
  0.05 x 10^{-6} Nms
- Max. axial static force for press-fit: 100 N
- End play: ≤ 150 µm
  Radial play: ≤ 30 µm
  Shaft runout: ≤ 10 µm
- Max. side load at 5 mm from mounting face:
  - sleeve bearings 1.5 N
  - ball bearings 3 N
- Motor fitted with sleeve bearings
  (ball bearings optional)

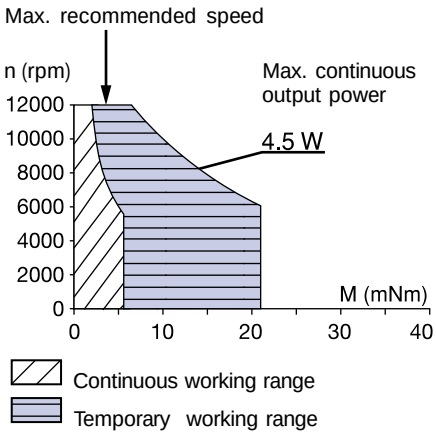

© Portescap

Specifications subject to change without prior notice

escap 17S78 & 17S88

Precious metal commutation system - 9 segments

D.C. Motor 2.4 Watt

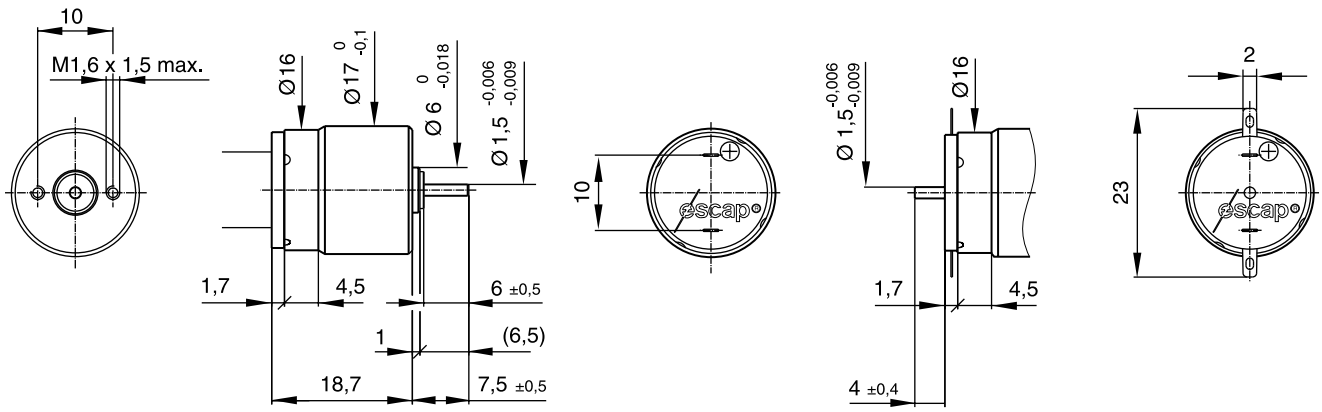

scale: 1:1
dimensions in mm
mass: 19 g

17S78 •••• • 1

17S88 •••• • 2

Winding types	••••	-213P	-208P	-209E
Measured values				
1 Measuring voltage	V	2.5	6	12
2 No-load speed	rpm	11900	10400	12400
3 Stall torque	mNm (oz-in)	5.2 (0.74)	4.6 (0.65)	5.9 (0.83)
4 Average no-load current	mA	70	25	15
5 Typical starting voltage	V	0.05	0.09	0.16
Max. recommended values				
6 Max. continuous current	A	1.41	0.52	0.32
7 Max. continuous torque	mNm (oz-in)	2.6 (0.37)	2.6 (0.37)	2.8 (0.4)
8 Max. angular acceleration	10^3 rad/s^2	130	131	137
Intrinsic parameters				
9 Back-EMF constant	V/1000 rpm	0.20	0.56	0.95
10 Torque constant	mNm/A (oz-in/A)	1.95 (0.28)	5.3 (0.76)	9.1 (1.28)
11 Terminal resistance	ohm	0.94	6.9	18.6
12 Motor regulation R/k^2	10^3/Nms	250	240	230
13 Rotor inductance	mH	0.02	0.15	0.35
14 Rotor inertia	kgm^2 . 10^{-7}	0.50	0.50	0.50
15 Mechanical time constant	ms	12	12	12

Availability: see enclosed document at the end of the catalogue

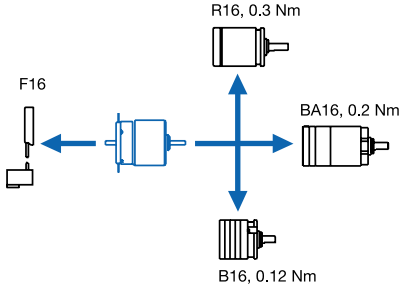

- Thermal resistance:
  rotor-body 13°C/W
  body-ambient 38°C/W
- Thermal time constant - rotor / stator:
  7 s / 350 s
- Max. rated coil temperature: 100°C (210°F)
- Recom. ambient temperature range:
  -30°C to +65°C (-22°F to +150°F)
- Viscous damping constant:
  0.04 x 10^{-6} Nms
- Max. axial static force for press-fit: 100 N
- End play: ≤ 150 µm
  Radial play: ≤ 30 µm
  Shaft runout: ≤ 10 µm
- Max. side load at 5 mm from mounting face:
  - sleeve bearings 1.5 N
  - ball bearings 3 N
- Motor fitted with sleeve bearings
  (ball bearings optional)
- With rear output shaft, the no-load current is 50% higher

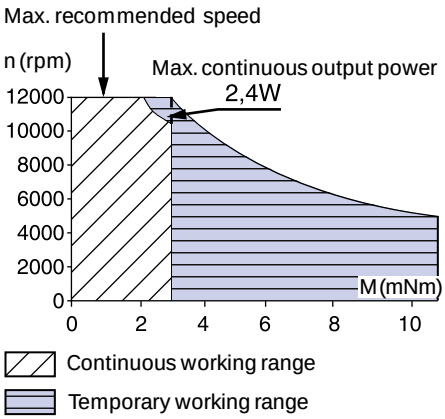

© Portescap

Specifications subject to change without prior notice

escap 17N78 & 17N88

Precious metal commutation system - 9 segments

D.C. Motor 3.2 Watt

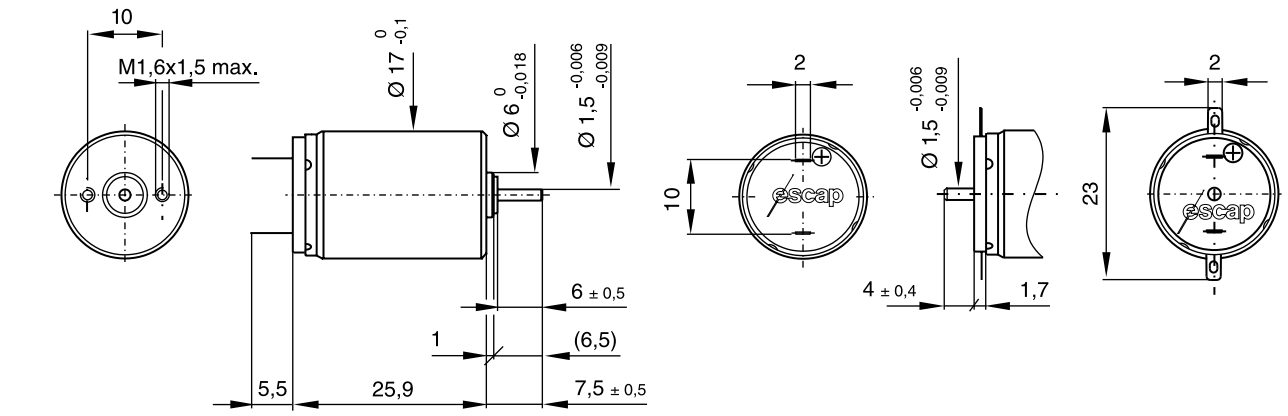

scale: 1:1
dimensions in mm
mass: 27 g

17N78 •••• • 1

17N88 •••• • 4

Winding types	••••	-216E	-213E	-210E	-208E	-207E
Measured values						
1 Measuring voltage	V	6.0	7.5	12.0	18.0	24.0
2 No-load speed	rpm	8500	8300	8500	8500	8900
3 Stall torque	mNm (oz-in)	12.5 (1.77)	10.7 (1.52)	9.3 (1.31)	9.4 (1.33)	9.4 (1.33)
4 Average no-load current	mA	10.5	9.1	7.7	4.9	3.5
5 Typical starting voltage	V	0.04	0.08	0.08	0.11	0.16
Max. recommended values						
6 Max. continuous current	A	0.86	0.63	0.37	0.25	0.19
7 Max. continuous torque	mNm (oz-in)	5.69 (0.81)	5.33 (0.75)	4.85 (0.69)	4.89 (0.69)	4.79 (0.68)
8 Max. angular acceleration	10^3 rad/s^2	129	167	152	161	166
Intrinsic parameters						
9 Back-EMF constant	V/1000 rpm	0.70	0.90	1.40	2.10	2.67
10 Torque constant	mNm/A (oz-in/A)	6.7 (0.95)	8.6 (1.22)	13.4 (1.89)	20.1 (2.84)	25.5 (3.61)
11 Terminal resistance	ohm	3.20	6.0	17.3	38.4	65.0
12 Motor regulation R/k^2	10^3/Nms	72	81	97	95	100
13 Rotor inductance	mH	0.11	0.14	0.40	0.90	1.41
14 Rotor inertia	kgm^2 . 10^{-7}	1.10	0.80	0.80	0.76	0.72
15 Mechanical time constant	ms	8	7	8	7	7

Availability: see enclosed document at the end of the catalogue

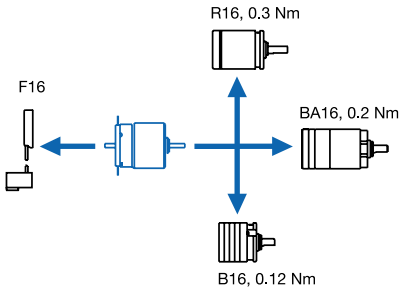

- Thermal resistance:
  rotor-body 10°C/W
  body-ambient 30°C/W
- Thermal time constant - rotor / stator:
  7 s / 400 s
- Max. rated coil temperature: 100°C (210°F)
- Recom. ambient temperature range:
  -30°C to +65°C (-22°F to +150°F)
- Viscous damping constant:
  0.04 x 10^{-6} Nms
- Max. axial static force for press-fit: 100 N
- End play: ≤ 150 µm
  Radial play: ≤ 30 µm
  Shaft runout: ≤ 10 µm
- Max. side load at 5 mm from mounting face:
  - sleeve bearings 1.5 N
  - ball bearings 3 N
- Motor fitted with sleeve bearings
  (ball bearings optional)

Max. recommended speed

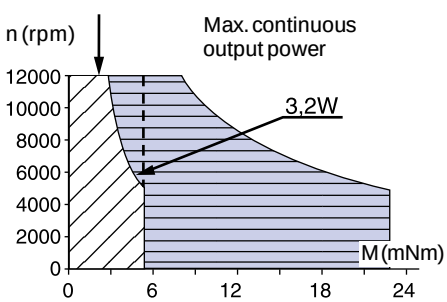

© Portescap

Specifications subject to change without prior notice

escap 22S28

Precious metal commutation system - 9 segments

D.C. Motor 2.8 Watt

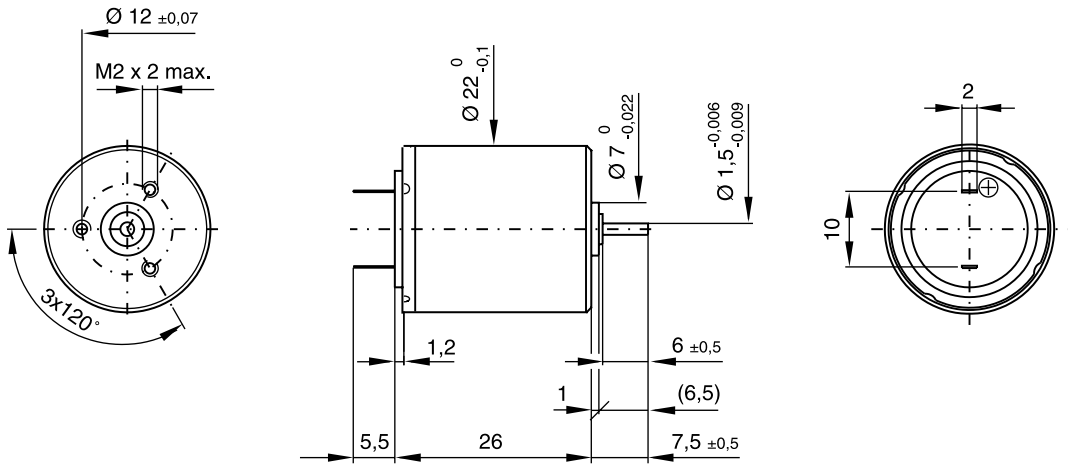

scale: 1:1
dimensions in mm
mass: 49 g

22S28 •••• • 1

Winding types	••••	-119	-210P	-208P	-210E	-208E	-205E
Measured values							
1 Measuring voltage	V	3.0	6.0	7.5	12.0	15.0	24.0
2 No-load speed	rpm	7600	8900	9100	9600	9600	7900
3 Stall torque	mNm (oz-in)	7.4 (1.05)	8.0 (1.13)	6.9 (0.98)	7.9 (1.12)	6.3 (0.89)	4.9 (0.69)
4 Average no-load current	mA	23.8	12.6	9.1	7.7	6	2.8
5 Typical starting voltage	V	0.05	0.05	0.06	0.10	0.20	0.30
Max. recommended values							
6 Max. continuous current	A	1.41	0.79	0.59	0.41	0.29	0.15
7 Max. continuous torque	mNm (oz-in)	5.2 (0.74)	5.0 (0.70)	4.5 (0.64)	4.7 (0.67)	4.1 (0.58)	4.1 (0.58)
8 Max. angular acceleration	10^3 rad/s^2	68	65	71	62	65	68
Intrinsic parameters							
9 Back-EMF constant	V/1000 rpm	0.39	0.67	0.82	1.24	1.54	2.97
10 Torque constant	mNm/A (oz-in/A)	3.72 (0.53)	6.4 (0.91)	7.8 (1.11)	11.8 (1.68)	14.7 (2.08)	28.4 (4.01)
11 Terminal resistance	ohm	1.50	4.80	8.5	18.0	35.0	140.0
12 Motor regulation R/k^2	10^3/Nms	110	120	140	130	160	170
13 Rotor inductance	mH	0.06	0.20	0.23	0.60	0.92	3.60
14 Rotor inertia	kgm^2 . 10^{-7}	1.90	1.90	1.60	1.90	1.60	1.50
15 Mechanical time constant	ms	21	23	22	25	26	26

Availability: see enclosed document at the end of the catalogue

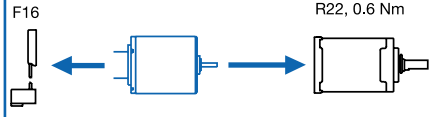

- Thermal resistance:
  rotor-body 5°C/W
  body-ambient 30°C/W
- Thermal time constant - rotor / stator:
  7 s / 480 s
- Max. rated coil temperature: 100°C (210°F)
- Recom. ambient temperature range:
  -30°C to +65°C (-22°F to +150°F)
- Viscous damping constant:
  0.04 x 10^{-6} Nms
- Max. axial static force for press-fit: 100 N
- End play: ≤ 150 µm
  Radial play: ≤ 30 µm
  Shaft runout: ≤ 10 µm
- Max. side load at 5 mm from mounting face:
  - sleeve bearings 1.5 N
  - ball bearings 3 N
- Motor fitted with sleeve bearings
  (ball bearings optional)

Max. recommended speed

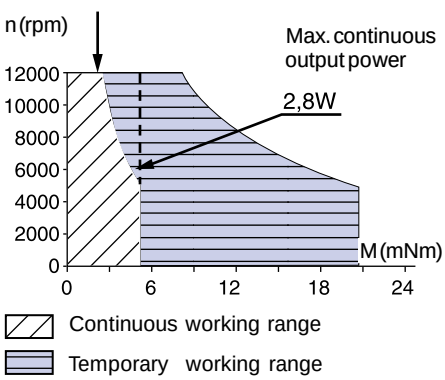

© Portescap

Specifications subject to change without prior notice

escap 22S48

Precious metal commutation system - 9 segments

D.C. Motor 2.8 Watt

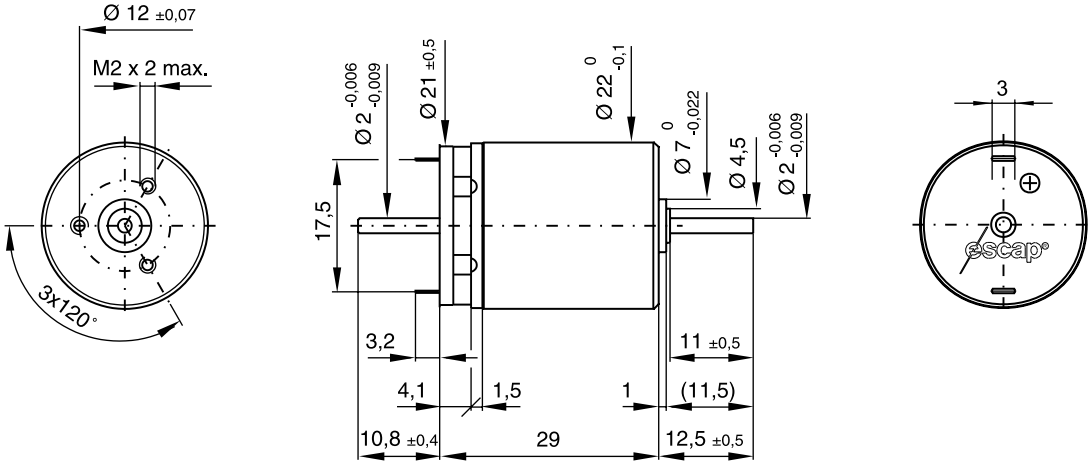

scale: 1:1
dimensions in mm
mass: 49 g

22S48 ▪▪▪▪ • 10

Winding types	▪▪▪▪	-119	-210P	-208P	-210E	-208E	-205E
Measured values							
1 Measuring voltage	V	3.0	6.0	7.5	12.0	15.0	24.0
2 No-load speed	rpm	7600	8800	9000	9500	9500	7900
3 Stall torque	mNm (oz-in)	7.4 (1.05)	8.0 (1.13)	6.9 (0.98)	7.9 (1.12)	6.3 (0.89)	4.9 (0.69)
4 Average no-load current	mA	36	19	14	12	9	4.2
5 Typical starting voltage	V	0.05	0.05	0.06	0.10	0.20	0.30
Max. recommended values							
6 Max. continuous current	A	1.41	0.79	0.59	0.41	0.29	0.15
7 Max. continuous torque	mNm (oz-in)	5.2 (0.74)	5.0 (0.70)	4.5 (0.64)	4.7 (0.67)	4.1 (0.58)	4.1 (0.58)
8 Max. angular acceleration	10^3 rad/s^2	68	65	71	62	65	68
Intrinsic parameters							
9 Back-EMF constant	V/1000 rpm	0.39	0.67	0.82	1.24	1.54	2.97
10 Torque constant	mNm/A (oz-in/A)	3.72 (0.53)	6.4 (0.91)	7.8 (1.11)	11.8 (1.68)	14.7 (2.08)	28.4 (4.01)
11 Terminal resistance	ohm	1.50	4.80	8.5	18.0	35.0	140.0
12 Motor regulation R/k^2	10^3/Nms	110	120	140	130	160	170
13 Rotor inductance	mH	0.06	0.20	0.23	0.60	0.92	3.60
14 Rotor inertia	kgm^2 . 10^{-7}	1.90	1.90	1.60	1.90	1.60	1.50
15 Mechanical time constant	ms	21	23	22	25	26	26

Availability: see enclosed document at the end of the catalogue

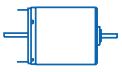

- Thermal resistance:
  rotor-body 5°C/W
  body-ambient 30°C/W
- Thermal time constant - rotor / stator:
  7 s / 480 s
- Max. rated coil temperature: 100°C (210°F)
- Recom. ambient temperature range:
  -30°C to +65°C (-22°F to +150°F)
- Viscous damping constant:
  0.04 x 10^{-6} Nms
- Max. axial static force for press-fit: 100 N
- End play: ≤ 150 µm
  Radial play: ≤ 30 µm
  Shaft runout: ≤ 10 µm
- Max. side load at 5 mm from mounting face:
  - sleeve bearings 1.5 N
  - ball bearings 3 N
- Motor fitted with sleeve bearings
  (ball bearings optional)

Max. recommended speed

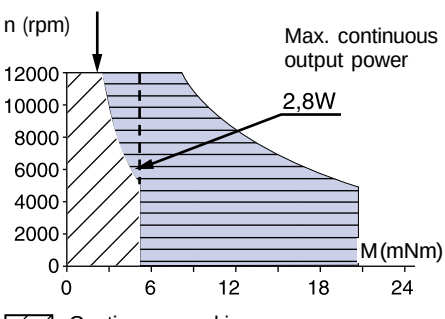

© Portescap

Specifications subject to change without prior notice

escap 22N28

Precious metal commutation system - 9 segments

D.C. Motor 3.8 Watt

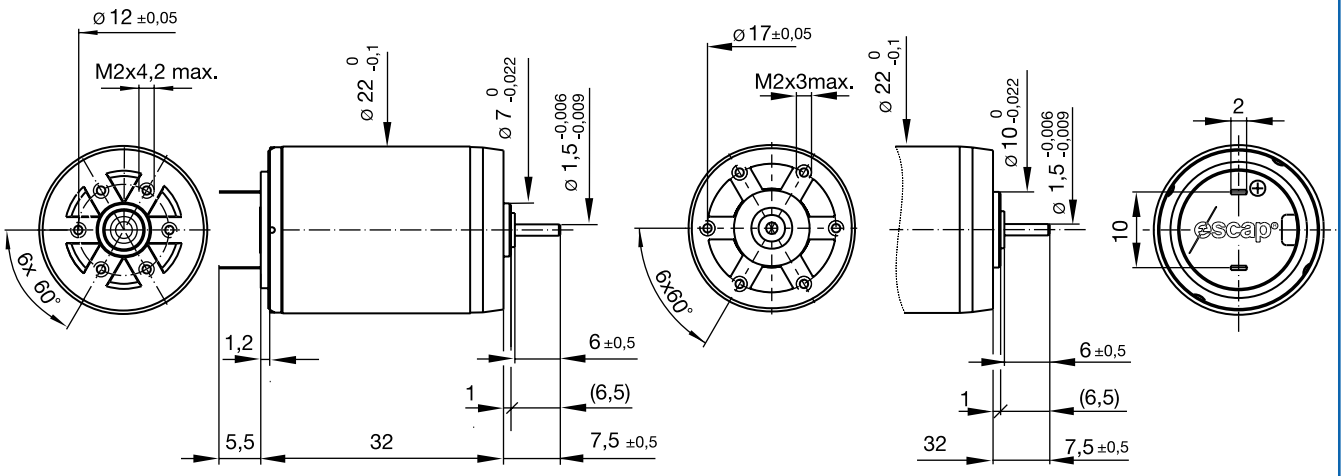

scale: 1:1
dimensions in mm
mass: 53 g

22N28•••••201 22N28•••••286

Winding types	••••	-216P	-216E	-213E	-210E	-208E	-105
Measured values							
1 Measuring voltage	V	3.0	6.0	9.0	12.0	18.0	36.0
2 No-load speed	rpm	5200	5600	7000	5900	6300	7200
3 Stall torque	mNm (oz-in)	10.9 (1.54)	10.6 (1.50)	10.7 (1.51)	8.6 (1.21)	8.2 (1.17)	8.5 (1.20)
4 Average no-load current	mA	12.6	7.0	6.0	3.5	2.5	1.4
5 Typical starting voltage	V	0.03	0.05	0.06	0.08	0.12	0.24
Max. recommended values							
6 Max. continuous current	A	1.50	0.83	0.62	0.38	0.26	0.14
7 Max. continuous torque	mNm (oz-in)	8.1 (1.15)	8.4 (1.19)	7.7 (1.06)	7.3 (1.04)	7.0 (0.98)	6.6 (0.93)
8 Max. angular acceleration	10^3 rad/s^2	63	60	67	61	60	82
Intrinsic parameters							
9 Back-EMF constant	V/1000 rpm	0.57	1.07	1.28	2.02	2.83	4.95
10 Torque constant	mNm/A (oz-in/A)	5.44 (0.77)	10.2 (1.45)	12.2 (1.73)	19.3 (2.73)	27.0 (3.83)	47.3 (6.69)
11 Terminal resistance	ohm	1.50	5.80	10.3	27.0	59.0	200
12 Motor regulation R/k^2	10^3/Nms	51	56	69	73	81	90
13 Rotor inductance	mH	0.10	0.35	0.50	1.20	2.30	7.00
14 Rotor inertia	kgm^2 . 10^{-7}	3.50	3.50	2.80	3.00	2.90	2.00
15 Mechanical time constant	ms	18	19	19	22	23	18

Availability: see enclosed document at the end of the catalogue

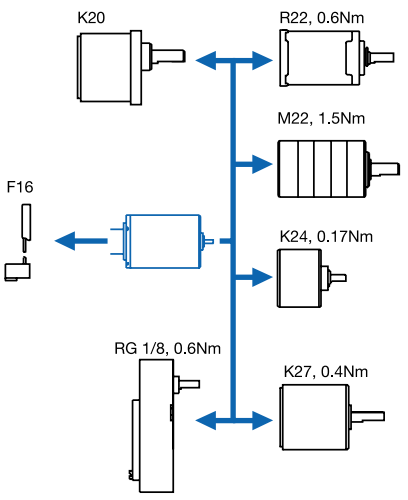

- Thermal resistance:
  rotor-body 6°C/W
  body-ambient 22°C/W
- Thermal time constant - rotor / stator:
  9 s / 550 s
- Max. rated coil temperature: 100°C (210°F)
- Recom. ambient temperature range:
  -30°C to +65°C (-22°F to +150°F)
- Viscous damping constant:
  0.1 x 10^{-6} Nms
- Max. axial static force for press-fit: 150 N
- End play: ≤ 150 µm
  Radial play: ≤ 30 µm
  Shaft runout: ≤ 10 µm
- Max. side load at 2 mm from mounting face:
  - sleeve bearings 1.5 N
  - ball bearings 3 N
- Motor fitted with sleeve bearings
  (ball bearings optional)

Max. recommended speed

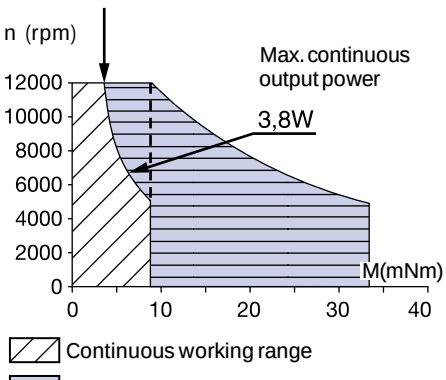

© Portescap

Specifications subject to change without prior notice

escap 22N48

Precious metal commutation system - 9 segments

D.C. Motor 3.8 Watt

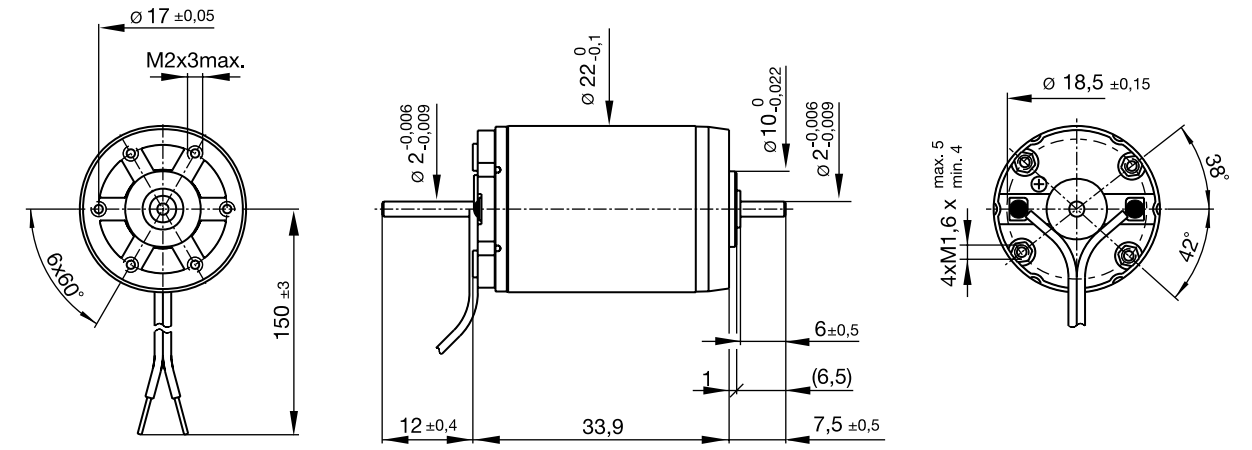

scale: 1:1
dimensions in mm
mass: 53 g

22N48 •••••308

Winding types	••••	-216P	-216E	-213E	-210E	-208E	-105
Measured values							
1 Measuring voltage	V	3.0	6.0	9.0	12.0	18.0	36.0
2 No-load speed	rpm	5200	5600	6900	5800	6200	7200
3 Stall torque	mNm (oz-in)	10.9 (1.54)	10.6 (1.50)	10.7 (1.51)	8.6 (1.21)	8.2 (1.17)	8.5 (1.20)
4 Average no-load current	mA	26	16	12.6	8	6	3
5 Typical starting voltage	V	0.25	0.35	0.45	0.5	0.7	0.9
Max. recommended values							
6 Max. continuous current	A	1.50	0.83	0.62	0.38	0.26	0.14
7 Max. continuous torque	mNm (oz-in)	8 (1.13)	8.1 (1.15)	7.4 (1.05)	7.2 (1.02)	6.9 (0.98)	6.5 (0.92)
8 Max. angular acceleration	10^3 rad/s^2	62	102	66	60	59	81
Intrinsic parameters							
9 Back-EMF constant	V/1000 rpm	0.57	1.05	1.28	2.02	2.83	4.95
10 Torque constant	mNm/A (oz-in/A)	5.4 (0.77)	10 (1.42)	12.2 (1.73)	19.3 (2.73)	27 (3.83)	47.3 (6.69)
11 Terminal resistance	ohm	1.5	5.7	10.3	27	59	200
12 Motor regulation R/k^2	10^3/Nms	51	57	69	73	81	90
13 Rotor inductance	mH	0.10	0.35	0.50	1.20	2.30	7.00
14 Rotor inertia	kgm^2 . 10^{-7}	3.5	2	2.8	3.0	2.9	2.0
15 Mechanical time constant	ms	18	11	19	22	23	18

Availability: see enclosed document at the end of the catalogue

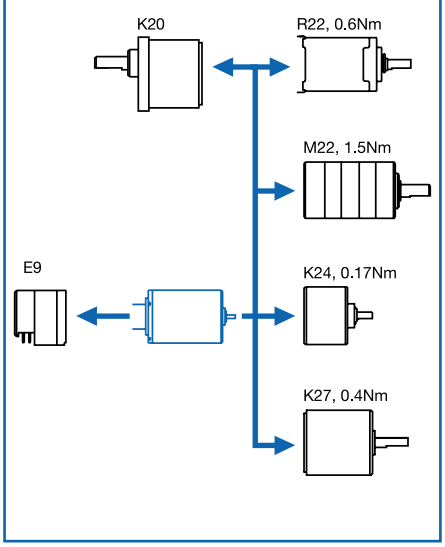

- Thermal resistance:
  rotor-body 6°C/W
  body-ambient 22°C/W
- Thermal time constant - rotor / stator:
  9 s / 550 s
- Max. rated coil temperature: 100°C (210°F)
- Recom. ambient temperature range:
  -30°C to +65°C (-22°F to +150°F)
- Viscous damping constant:
  0.1 x 10^{-6} Nms
- Max. axial static force for press-fit: 150 N
- End play: ≤ 150 µm
  Radial play: ≤ 30 µm
  Shaft runout: ≤ 10 µm
- Max. side load at 2 mm from mounting face:
  - sleeve bearings 3 N
  - ball bearings 6 N
- Motor fitted with sleeve bearings
  (ball bearings optional)

Max. recommended speed

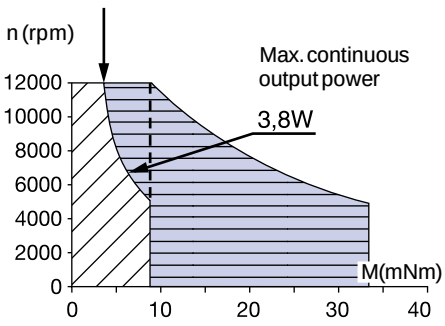

© Portescap

Specifications subject to change without prior notice

escap 22V28

Precious metal commutation system - 9 segments

D.C. Motor
4.2 Watt

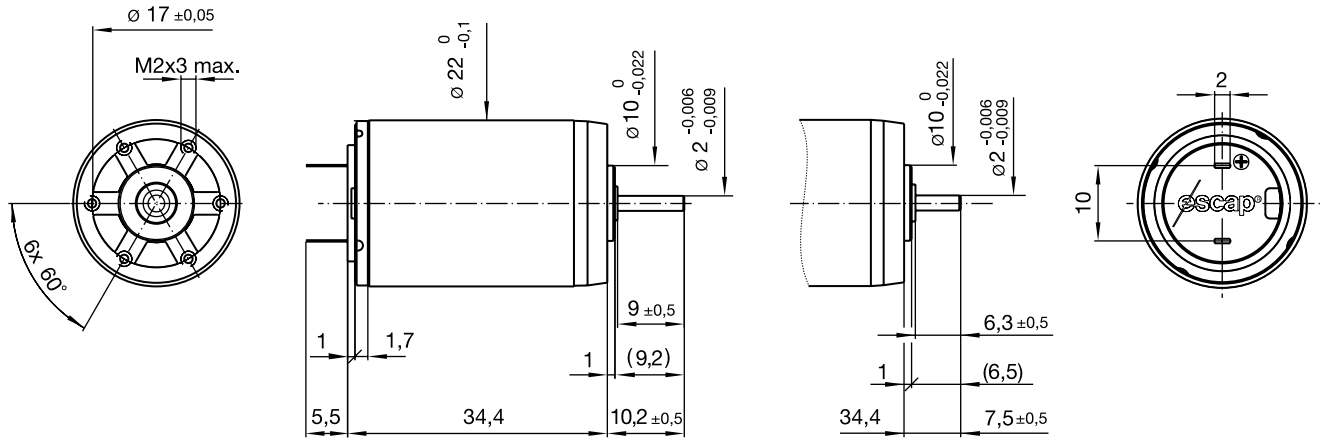

scale: 1:1
dimensions in mm
mass: 68 g

22V28 ▪▪▪▪ • 201 22V28 ▪▪▪▪ • 202

Winding types	▪▪▪▪	-216P	-213P	-216E	-213E	-210E	-208E
Measured values							
1 Measuring voltage	V	4.5	6.0	9.0	12.0	15.0	24.0
2 No-load speed	rpm	6400	7100	6700	7600	7500	6300
3 Stall torque	mNm (oz-in)	18.2 (2.59)	16.0 (2.27)	17.1 (2.42)	15.0 (2.13)	11.5 (1.63)	11.5 (1.62)
4 Average no-load current	mA	18	15	9	7.6	6.0	3.2
5 Typical starting voltage	V	0.06	0.08	0.10	0.15	0.15	0.20
Max. recommended values							
6 Max. continuous current	A	1.55	1.15	0.77	0.58	0.40	0.23
7 Max. continuous torque	mNm (oz-in)	10.27(1.45)	9.09 (1.29)	9.66 (1.37)	8.48 (1.20)	7.4 (1.05)	8.13 (1.15)
8 Max. angular acceleration	10^3 rad/s^2	66	71	62	66	64	85
Intrinsic parameters							
9 Back-EMF constant	V/1000 rpm	0.70	0.84	1.33	1.56	1.97	3.75
10 Torque constant	mNm/A (oz-in/A)	6.7 (0.95)	8.0 (1.13)	12.7 (1.80)	14.9 (2.11)	18.8 (2.66)	35.8 (5.07)
11 Terminal resistance	ohm	1.65	3.00	6.70	11.9	24.5	75.0
12 Motor regulation R/k^2	10^3/Nms	37	47	42	54	69	58
13 Rotor inductance	mH	0.10	0.15	0.50	0.55	0.80	3.30
14 Rotor inertia	kgm^2 . 10^{-7}	3.90	3.20	3.90	3.20	2.90	2.40
15 Mechanical time constant	ms	14	15	16	17	20	14

Availability: see enclosed document at the end of the catalogue

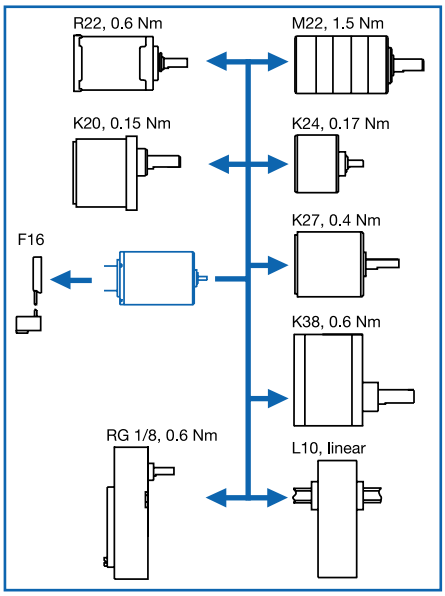

- Thermal resistance:
  rotor-body 6°C/W
  body-ambient 20°C/W
- Thermal time constant - rotor / stator:
  10 s / 460 s
- Max. rated coil temperature: 100°C (210°F)
- Recom. ambient temperature range:
  -30°C to +65°C (-22°F to +150°F)
- Viscous damping constant:
  0.05 x 10^{-6} Nms
- Max. axial static force for press-fit: 150 N
- End play: ≤ 150 µm
  Radial play: ≤ 30 µm
  Shaft runout: ≤ 10 µm
- Max. side load at 5 mm from mounting face:
  - sleeve bearings 3 N
  - ball bearings 6 N
- Motor fitted with sleeve bearings
  (ball bearings optional)

Max. recommended speed

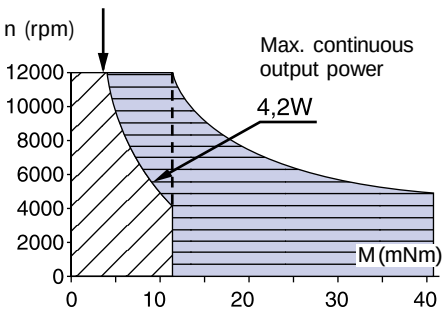

Continuous working range

Temporary working range

© Portescap

Specifications subject to change without prior notice

escap 22V48

Precious metal commutation system - 9 segments

D.C. Motor 4.2 Watt

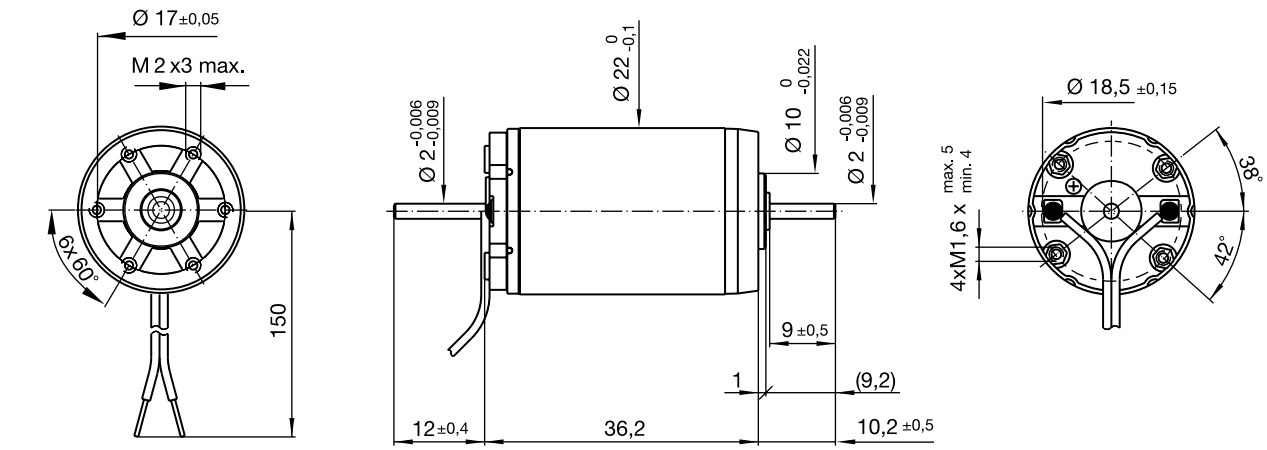

scale: 1:1
dimensions in mm
mass: 68 g

22V48 ▪▪▪▪ • 204

Winding types	▪▪▪▪	-216P	-213P	-216E	-213E	-210E	-208E
Measured values							
1 Measuring voltage	V	4.5	6.0	9.0	12.0	15.0	24.0
2 No-load speed	rpm	6400	7100	6700	7600	7500	6300
3 Stall torque	mNm (oz-in)	18.2 (2.59)	16.0 (2.27)	17.1 (2.42)	15.0 (2.13)	11.5 (1.63)	11.5 (1.62)
4 Average no-load current	mA	27	22	13.5	11	9	4.8
5 Typical starting voltage	V	0.06	0.08	0.10	0.15	0.15	0.20
Max. recommended values							
6 Max. continuous current	A	1.55	1.15	0.77	0.58	0.40	0.23
7 Max. continuous torque	mNm (oz-in)	10.2 (1.45)	9.0 (1.29)	9.6 (1.37)	8.5 (1.20)	7.4 (1.05)	8.1 (1.15)
8 Max. angular acceleration	10^3 rad/s^2	66	71	62	66	64	85
Intrinsic parameters							
9 Back-EMF constant	V/1000 rpm	0.70	0.84	1.33	1.56	1.97	3.75
10 Torque constant	mNm/A (oz-in/A)	6.7 (0.95)	8.0 (1.13)	12.7 (1.80)	14.9 (2.11)	18.8 (2.66)	35.8 (5.07)
11 Terminal resistance	ohm	1.65	3.00	6.70	11.9	24.5	75.0
12 Motor regulation R/k^2	10^3/Nms	37	47	42	54	69	58
13 Rotor inductance	mH	0.10	0.15	0.50	0.55	0.80	3.30
14 Rotor inertia	kgm^2 . 10^{-7}	3.90	3.20	3.90	3.20	2.90	2.40
15 Mechanical time constant	ms	14	15	16	17	20	14

Availability: see enclosed document at the end of the catalogue

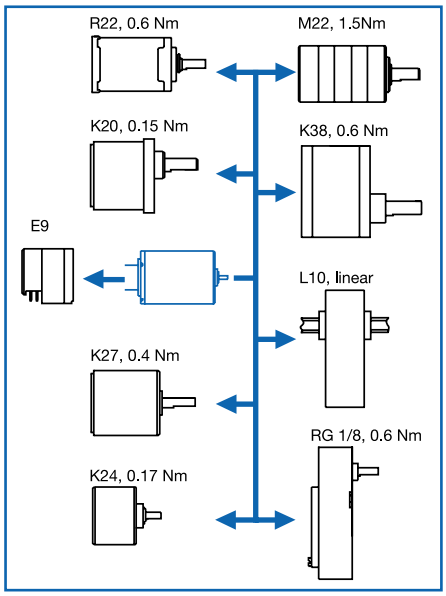

- Thermal resistance:
  rotor-body 6°C/W
  body-ambient 20°C/W
- Thermal time constant - rotor / stator:
  10 s / 460 s
- Max. rated coil temperature: 100°C (210°F)
- Recom. ambient temperature range:
  -30°C to +65°C (-22°F to +150°F)
- Viscous damping constant:
  0.05 x 10^{-6} Nms
- Max. axial static force for press-fit: 150 N
- End play: ≤ 150 µm
  Radial play: ≤ 30 µm
  Shaft runout: ≤ 10 µm
- Max. side load at 5 mm from mounting face:
  - sleeve bearings 3 N
  - ball bearings 6 N
- Motor fitted with sleeve bearings (ball bearings optional)

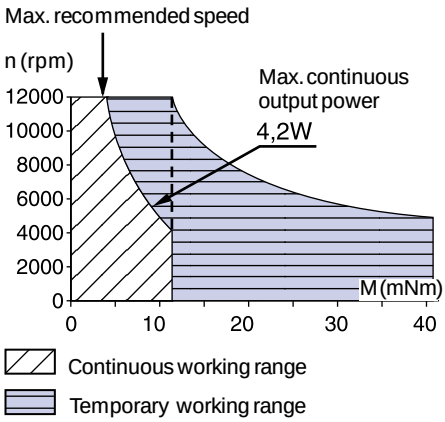

© Portescap

Specifications subject to change without prior notice

escap 23LT12

Graphite/copper commutation system - 9 segments

D.C. Motor 8.5 Watt

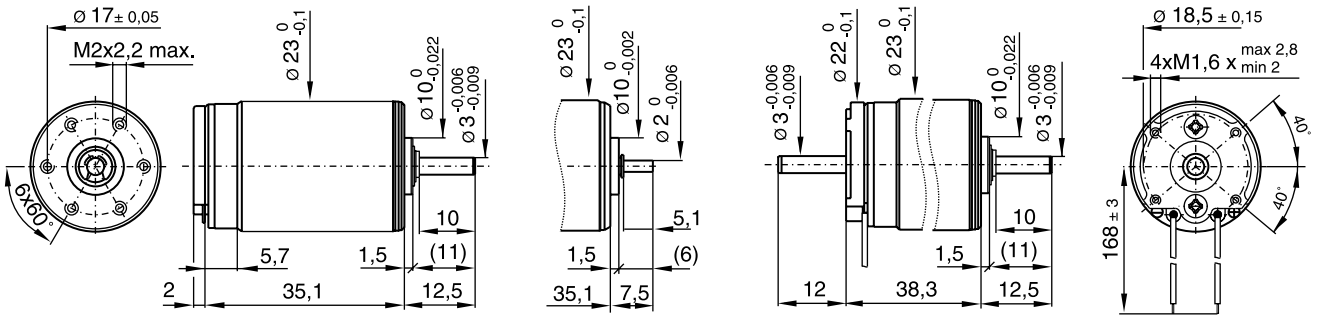

scale: 3:4
dimensions in mm
mass: 80 g

23LT12 •••• • 1 23LT12 •••• • 45 23LT12 •••• • 120

Winding types	••••	-216P	-216E	-210E
Measured values				
1 Measuring voltage	V	6	12	18
2 No-load speed	rpm	8300	8800	8600
3 Stall torque	mNm (oz-in)	20.5 (2.90)	21.7 (3.08)	13.0 (1.85)
4 Average no-load current	mA	170	90	60
5 Typical starting voltage	V	-	-	-
Max. recommended values				
6 Max. continuous current	A	1.75	0.92	0.48
7 Max. continuous torque	mNm (oz-in)	10.2 (1.45)	10.3 (1.46)	7.7 (1.08)
8 Max. angular acceleration	10^3 rad/s^2	87	88	99
Intrinsic parameters				
9 Back-EMF constant	V/1000 rpm	0.68	1.30	1.92
10 Torque constant	mNm/A (oz-in/A)	6.5 (0.92)	12.4 (1.76)	18.3 (2.59)
11 Terminal resistance	ohm	1.9	6.9	25.3
12 Motor regulation R/k^2	10^3/Nms	45	45	75
13 Rotor inductance	mH	0.1	0.4	0.8
14 Rotor inertia	kgm^2 . 10^{-7}	4.7	4.7	3.1
15 Mechanical time constant	ms	21	21	23

Availability: see enclosed document at the end of the catalogue

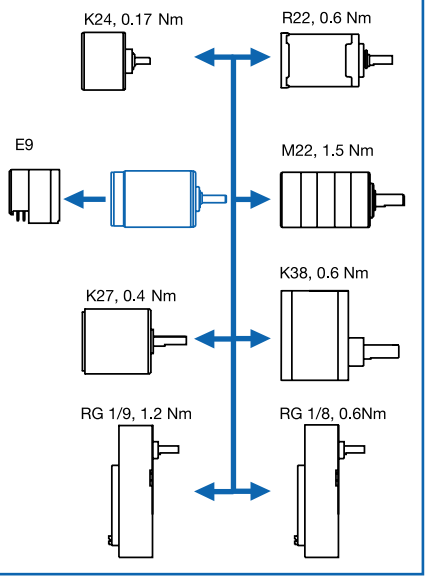

- Thermal resistance:
  rotor-body 7°C/W
  body-ambient 16°C/W
- Thermal time constant - rotor / stator:
  12 s / 460 s
- Max. rated coil temperature: 155°C
- Recom. ambient temperature range:
  -10°C to +80°C (-14°F to 176°F)
- Max. axial static force for press-fit: 250 N
- End play: ≤ 150 µm
  Radial play: ≤ 30 µm
  Shaft runout: ≤ 10 µm
- Max. side load at 5 mm from mounting face:
  - sleeve bearings 6 N
  - ball bearings 8 N
- Motor fitted with sleeve bearings
  (ball bearings optional)

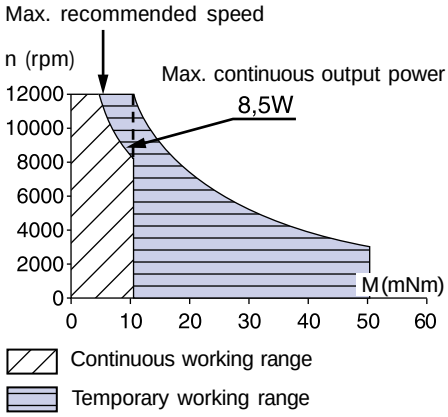

© Portescap

Specifications subject to change without prior notice

escap 23V58 & 23V48

Precious metal commutation system - 9 segments

D.C. Motor
6.5 Watt

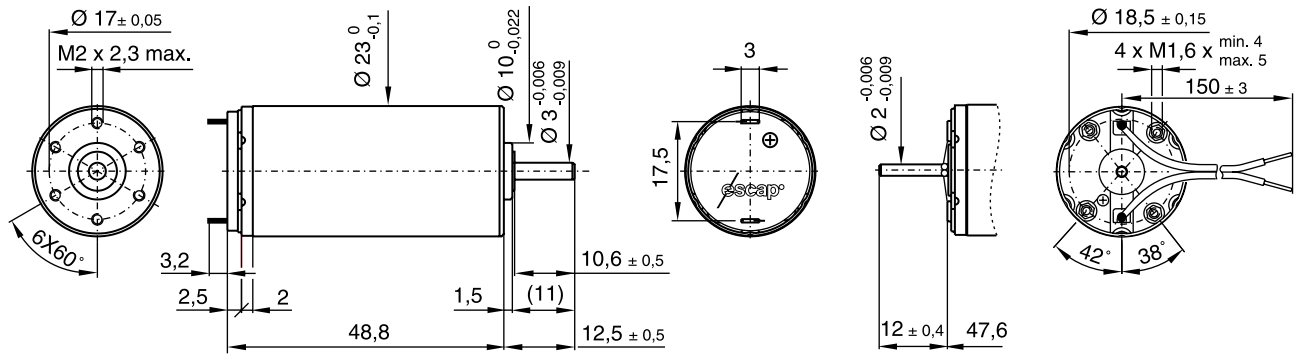

scale: 3:4
dimensions in mm
mass: 100 g

23V58 •••• • 1

23V48 •••• • 11

Winding types	••••	-216P	-213P	-216E	-213E	-210E
Measured values						
1 Measuring voltage	V	6.0	7.5	12.0	15.0	24.0
2 No-load speed	rpm	4500	4800	4800	5200	6500
3 Stall torque	mNm (oz-in)	31 (4.4)	27 (3.8)	29 (4.1)	24 (3.4)	23.3 (3.3)
4 Average no-load current	mA	30.8	27.5	18.7	16.5	13
5 Typical starting voltage	V	0.05	0.10	0.13	0.15	0.20
Max. recommended values						
6 Max. continuous current	A	1.49	1.15	0.75	0.57	0.39
7 Max. continuous torque	mNm (oz-in)	18.2 (2.6)	16.4 (2.3)	17.2 (2.4)	14.9 (2.1)	13 (1.8)
8 Max. angular acceleration	10^3 rad/s^2	77	87	73	79	88
Intrinsic parameters						
9 Back-EMF constant	V/1000 rpm	1.31	1.53	2.47	2.82	3.64
10 Torque constant	mNm/A (oz-in/A)	12.5 (1.7)	14.6 (2.0)	23.5 (3.33)	26.9 (3.8)	34.8 (4.9)
11 Terminal resistance	ohm	2.45	4.1	9.7	16.6	35.8
12 Motor regulation R/k^2	10^3/Nms	16	19	17	23	30
13 Rotor inductance	mH	0.20	0.30	0.80	1.10	1.70
14 Rotor inertia	kgm^2 . 10^{-7}	5.90	4.70	5.90	4.70	3.70
15 Mechanical time constant	ms	9	9	10	11	11

Availability: see enclosed document at the end of the catalogue

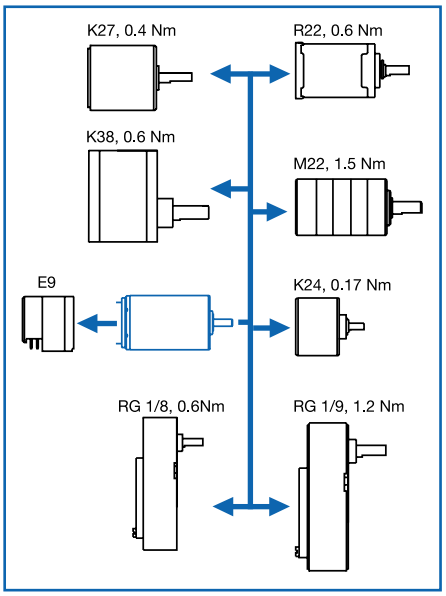

- Thermal resistance:
  rotor-body 5°C/W
  body-ambient 12°C/W
- Thermal time constant - rotor / stator:
  10 s / 580 s
- Max. rated coil temperature: 100°C
- Recom. ambient temperature range:
  -30°C to +65°C
- Viscous damping constant:
  0.45 x 10^{-6} Nms
- Max. axial static force for press-fit: 250 N
- End play: ≤ 150 µm
  Radial play: ≤ 30 µm
  Shaft runout: ≤ 10 µm
- Max. side load at 5 mm from mounting face:
  - sleeve bearing 6 N
  - ball bearings 8 N
- Motor fitted with sleeve bearings (ball bearings optional)
- With rear output shaft, the no-load current is 50% higher

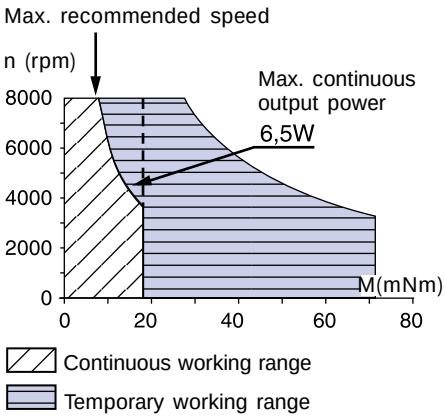

© Portescap

Specifications subject to change without prior notice

escap 23DT12

Graphite/copper commutation system - 9 segments

D.C. Motor 15 Watt

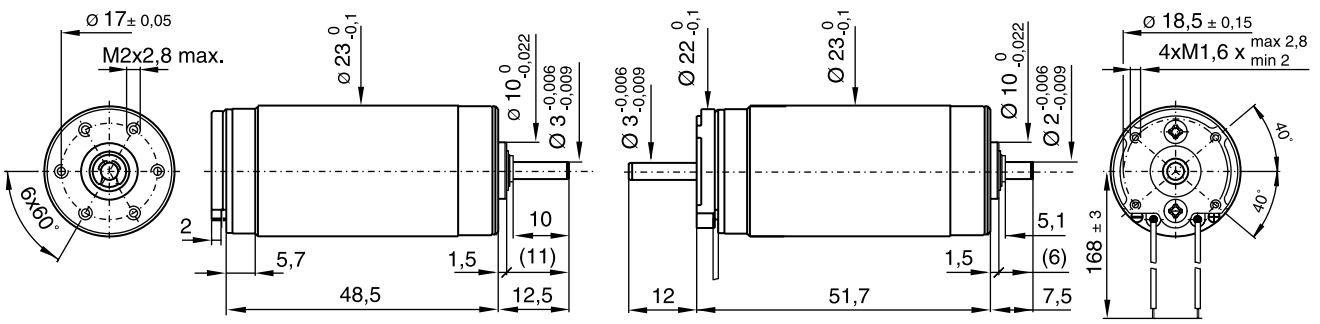

scale: 3:4
dimensions in mm
mass: 110 g

23DT12 •••• • 1

23DT2R12 •••• • 93

Winding types	••••	-216P	-216E	-210E
Measured values				
1 Measuring voltage	V	9.0	18.0	28.0
2 No-load speed	rpm	6700	7300	7400
3 Stall torque	mNm (oz-in)	44 (6.2)	42 (5.9)	27 (3.8)
4 Average no-load current	mA	100	50	35
5 Typical starting voltage	V	--	--	--
Max. recommended values				
6 Max. continuous current	A	1.76	0.90	0.47
7 Max. continuous torque	mNm (oz-in)	21 (3)	19.5 (2.8)	15 (2.1)
8 Max. angular acceleration	10^3 rad/s^2	135	128	152
Intrinsic parameters				
9 Back-EMF constant	V/1000 rpm	1.30	2.40	3.60
10 Torque constant	mNm/A (oz-in/A)	12.4 (1.75)	22.9 (3.25)	34.4 (4.9)
11 Terminal resistance	ohm	2.55	9.8	36.3
12 Motor regulation R/k^2	10^3/Nms	17	19	31
13 Rotor inductance	mH	0.20	0.80	1.70
14 Rotor inertia	kgm^2 . 10^{-7}	6.10	6.10	3.90
15 Mechanical time constant	ms	10	12	12

Availability: see enclosed document at the end of the catalogue

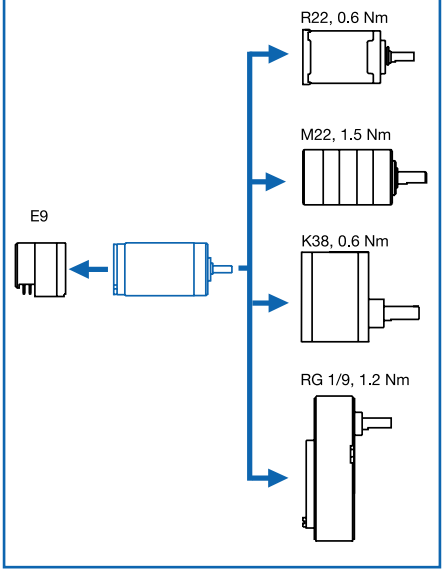

- Thermal resistance:
  rotor-body 5°C/W
  body-ambient 12°C/W
- Thermal time constant - rotor / stator:
  13 s / 580 s
- Max. rated coil temperature: 155°C
- Recom. ambient temperature range:
  -10°C to +80°C (-14°F to 176°F)
- Max. axial static force for press-fit: 250 N
- End play: ≤ 150 µm
  Radial play: ≤ 30 µm
  Shaft runout: ≤ 10 µm
- Max. side load at 5 mm from mounting face:
  - sleeve bearings 6 N
  - ball bearings 8 N
- Motor exec. • 1 fitted with sleeve bearings (ball bearings optional)
- Motor exec. • 93 fitted with two preloaded ball bearings

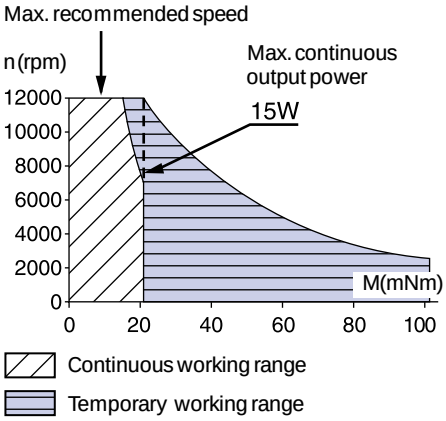

© Portescap

Specifications subject to change without prior notice

escap 26N58 & 26N48

Precious metal commutation system - 9 segments

D.C. Motor 5,7 Watt

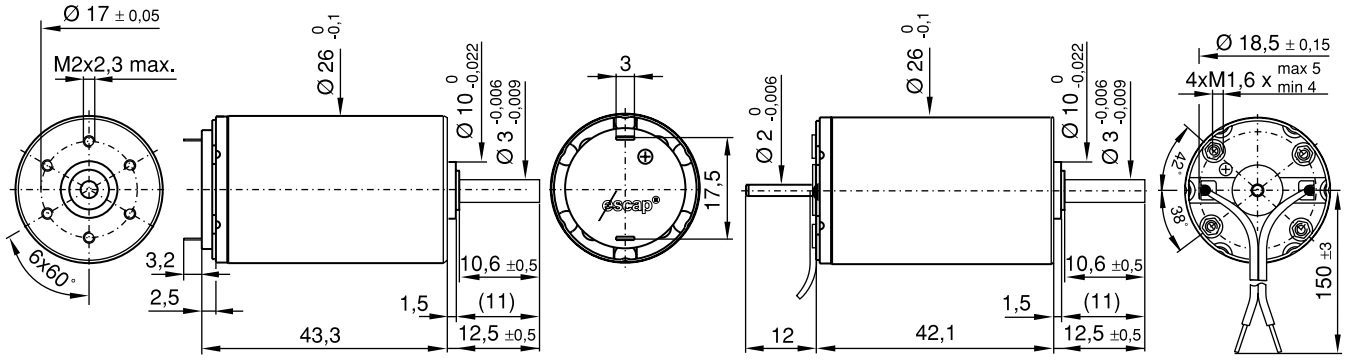

scale: 3:4
dimensions in mm
mass : 114 g

26N58 •••• • 1

26N48 •••• • 9

Winding types	••••	-216P	-113P	-216E	-113	-110
Measured values						
1 Measuring voltage	V	6	7.5	12	15	24
2 No-load speed	rpm	4500	5500	4700	5400	6700
3 Stall torque	mNm (oz-in)	29.6 (4.19)	25.5 (3.6)	28.6 (4.06)	26 (3.7)	25 (3.54)
4 Average no-load current	mA	31	30	16	15	12
5 Typical starting voltage	V	0.08	0.1	0.15	0.2	0.28
Max. recommended values						
6 Max. continuous current	A	1.26	1.25	0.86	0.64	0.34
7 Max. continuous torque	mNm (oz-in)	15.2 (2.2)	15.7 (2.2)	20 (2.8)	16.2 (2.3)	11 (1.56)
8 Max. angular acceleration	10^3 rad/s^2	63	66	84	68	46
Intrinsic parameters						
9 Back-EMF constant	V/1000 rpm	1.29	1.35	2.5	2.7	3.5
10 Torque constant	mNm/A (oz-in/A)	12.3 (1.74)	12.9 (1.83)	23.9 (3.38)	25.8 (3.65)	33.5 (4.74)
11 Terminal resistance	ohm	2.5	3.8	10	16	32
12 Motor regulation R/k^2	10^3/Nms	16	23	17	24	29
13 Rotor inductance	mH	0.2	0.3	0.8	1.1	1.7
14 Rotor inertia	kgm^2 . 10^{-7}	8.5	6.7	8.5	6.7	5.3
15 Mechanical time constant	ms	14	15	15	15	19

Availability: see enclosed document at the end of the catalogue

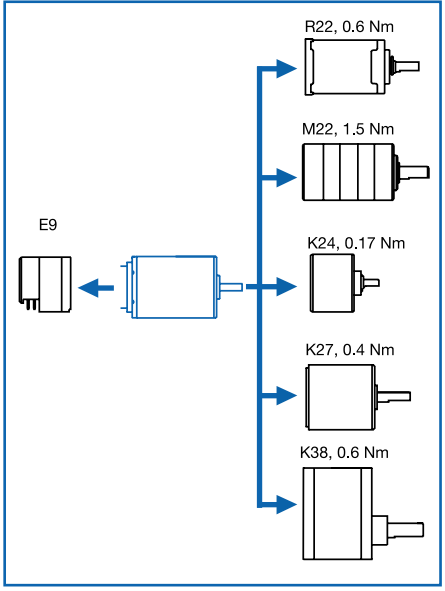

- Thermal resistance:
  rotor-body 5°C/W
  body-ambient 12°C/W
- Thermal time constant - rotor / stator:
  10 s / 640 s
- Max. rated coil temperature: 100°C (210°F)
- Recom. ambient temperature range:
  -30°C to +65°C (-22°F to +150°F)
- Viscous damping constant:
  0.45 x 10^{-6} Nms
- Max. axial static force for press-fit: 250 N
- End play: ≤ 150 µm
  Radial play: ≤ 30 µm
  Shaft runout: ≤ 10 µm
- Max. side load at 5 mm from mounting face:
  - sleeve bearings 6 N
  - ball bearings 8 N
- Motor fitted with sleeve bearings (ball bearings optional)

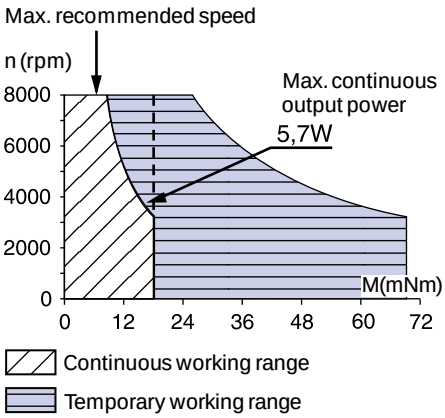

© Portescap

Specifications subject to change without prior notice

escap 28L28

Precious metal commutation system - 9 segments

D.C. Motor 11 Watt

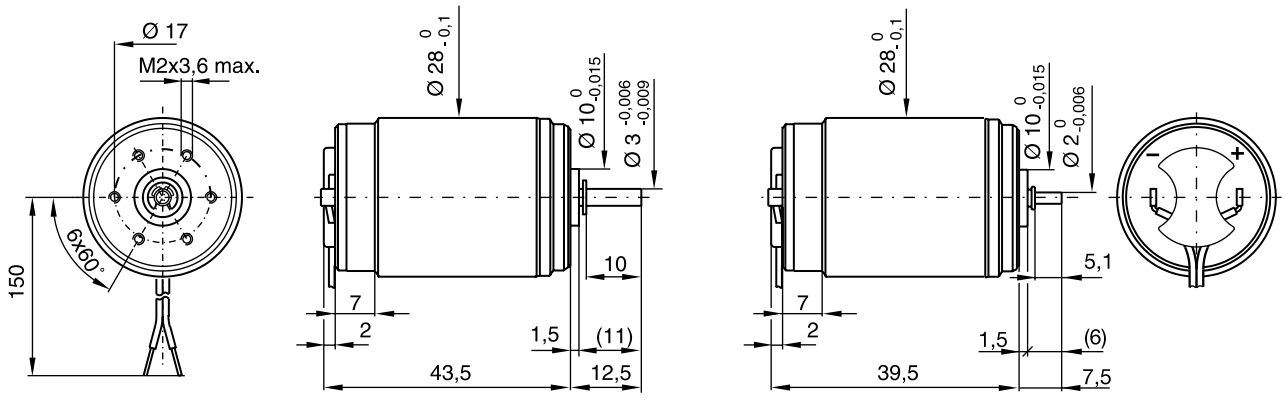

scale: 3:4
dimensions in mm
mass: 125 g

28L28 •••• • 49

28L28 •••• • 164

Winding types	••••	-219P	-219	-416E	-413E	-410E
Measured values						
1 Measuring voltage	V	6.0	12.0	24.0	28.0	36.0
2 No-load speed	rpm	5300	5300	5600	5300	5000
3 Stall torque	mNm (oz-in)	43 (6.08)	43 (6.11)	50 (7.08)	42 (5.96)	34 (4.87)
4 Average no-load current	mA	44.0	22.0	11.0	8.8	6.6
5 Typical starting voltage	V	0.05	0.10	0.15	0.20	0.40
Max. recommended values						
6 Max. continuous current	A	1.50	0.95	0.53	0.40	0.28
7 Max. continuous torque	mNm (oz-in)	15.5 (2.20)	19.9 (2.82)	21.0 (2.97)	19.7 (2.78)	18.3 (2.58)
8 Max. angular acceleration	10^3 rad/s^2	48	48	30	36	41
Intrinsic parameters						
9 Back-EMF constant	V/1000 rpm	1.12	2.24	4.26	5.20	7.10
10 Torque constant	mNm/A (oz-in/A)	10.7 (1.51)	21.4 (3.03)	40.7 (5.76)	49.7 (7.03)	67.8 (9.60)
11 Terminal resistance	ohm	1.49	5.95	19.5	33.0	71.0
12 Motor regulation R/k^2	10^3/Nms	13	13	12	13	15
13 Rotor inductance	mH	0.10	0.50	2.40	3.20	5.20
14 Rotor inertia	kgm^2 . 10^{-7}	10.40	10.40	17.50	13.50	11.00
15 Mechanical time constant	ms	14	14	21	18	17

Availability: see enclosed document at the end of the catalogue

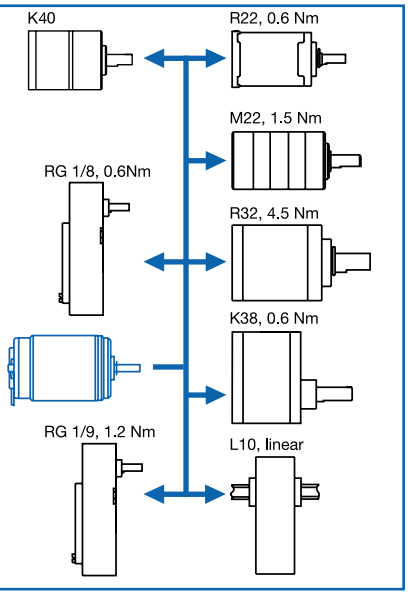

- Thermal resistance:
  rotor-body 5 °C/W
  body-ambient 12 °C/W
- Thermal time constant - rotor / stator:
  20 s / 760 s
- Max. rated coil temperature: 100°C (210°F)
- Recom. ambient temperature range:
  -30°C to +65°C (-22°F to +150°F)
- Viscous damping constant:
  0.5 x 10^{-6} Nms
- Max. axial static force for press-fit : 150 N
- End play: ≤ 150 µm
  Radial play: ≤ 18 µm
  Shaft runout: ≤ 10 µm
- Max. side load at 5 mm from mounting face
  - sleeve bearings 6 N
  - ball bearings 8 N
- Motor fitted with sleeve bearings (ball bearings optional)

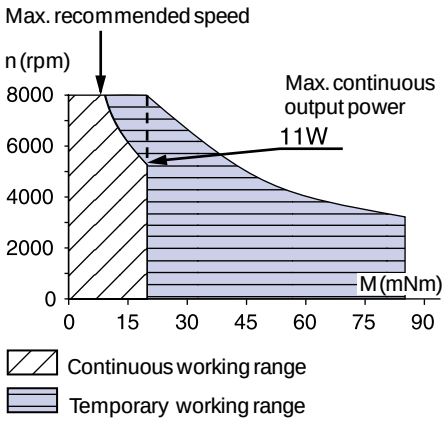

© Portescap

Specifications subject to change without prior notice

escap 28LT12

Graphite/copper commutation system - 9 segments

D.C. Motor 21 Watt

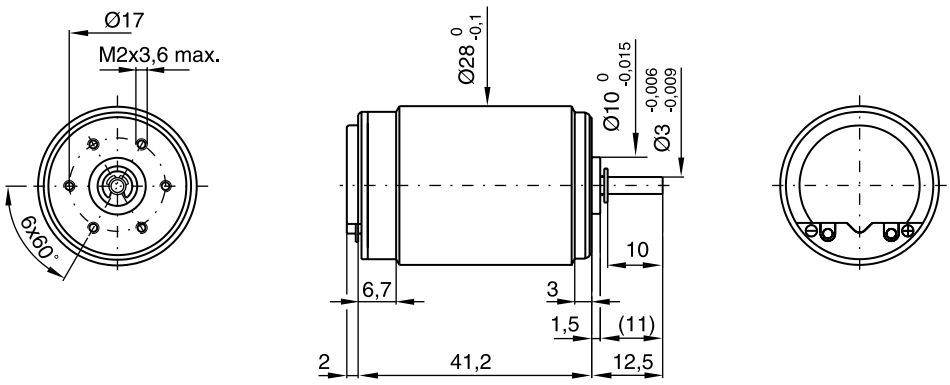

scale: 3:4
dimensions in mm
mass: 135 g

28LT12 ▪▪▪▪ • 49

Winding types	▪▪▪▪	-219P	-219	-416E
Measured values				
1 Measuring voltage	V	9.0	18.0	32.0
2 No-load speed	rpm	7900	7900	7400
3 Stall torque	mNm (oz-in)	57 (8.1)	63 (8.86)	65 (9.26)
4 Average no-load current	mA	125.0	65.0	35.0
5 Typical starting voltage	V	--	--	--
Max. recommended values				
6 Max. continuous current	A	2.15	1.13	0.63
7 Max. continuous torque	mNm (oz-in)	21.6 (3.06)	22.8 (3.23)	24.2 (3.42)
8 Max. angular acceleration	10^3 rad/s^2	51	53	34
Intrinsic parameters				
9 Back-EMF constant	V/1000 rpm	1.12	2.24	4.26
10 Torque constant	mNm/A (oz-in/A)	10.7 (1.51)	21.4 (3.03)	40.7 (5.76)
11 Terminal resistance	ohm	1.70	6.15	19.9
12 Motor regulation R/k^2	10^3/Nms	15	13	12
13 Rotor inductance	mH	0.10	0.50	2.40
14 Rotor inertia	kgm^2 . 10^{-7}	10.70	10.70	17.80
15 Mechanical time constant	ms	16	14	21

Availability: see enclosed document at the end of the catalogue

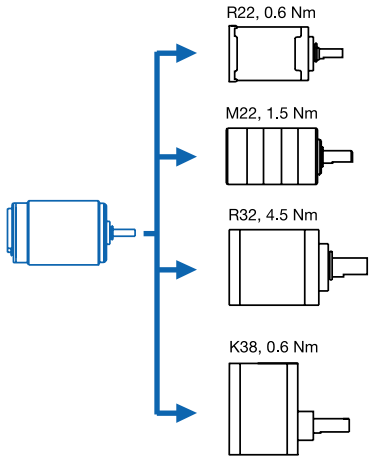

- Thermal resistance:
  rotor-body 5°C/W
  body-ambient 12°C/W
- Thermal time constant - rotor / stator:
  17 s / 760 s
- Max. rated coil temperature: 155°C
- Recom. ambient temperature range:
  -10°C to +80°C (14°F to 176°F)
- Max. axial static force for press-fit: 250 N
- End play: ≤ 150 µm
  Radial play: ≤ 18 µm
  Shaft runout: ≤ 10 µm
- Max. side load at 5 mm from mounting face:
  - sleeve bearings 6 N
  - ball bearings 8 N
- Motor fitted with sleeve bearings
  (ball bearings optional)

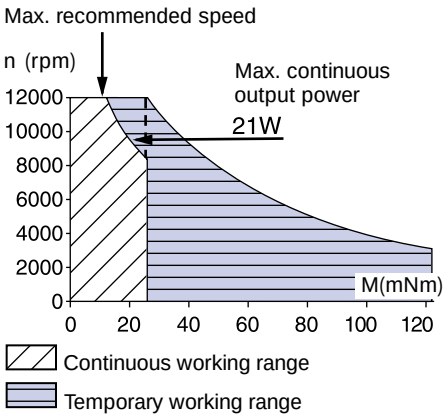

© Portescap

Specifications subject to change without prior notice

escap 28D11

Precious metal commutation system - 13 segments

D.C. Motor 15 Watt

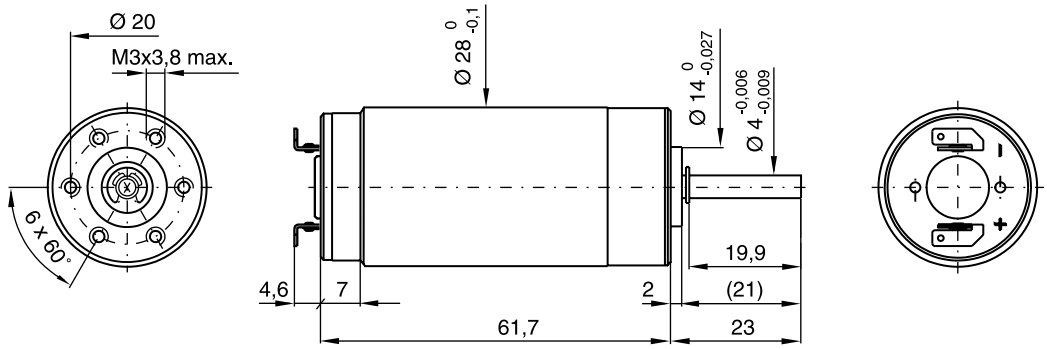

scale: 3:4
dimensions in mm
mass: 190 g

28D11 •••• • 2

Winding types	••••	-222P	-219P	-222E	-219E
Measured values					
1 Measuring voltage	V	9.0	12.0	18.0	24.0
2 No-load speed	rpm	5300	5800	5200	6000
3 Stall torque	mNm (oz-in)	97 (13.75)	94 (13.27)	101 (14.26)	95 (13.47)
4 Average no-load current	mA	55.0	44.0	27.5	22.0
5 Typical starting voltage	V	0.10	0.15	0.20	0.30
Max. recommended values					
6 Max. continuous current	A	1.50	1.50	1.17	0.91
7 Max. continuous torque	mNm (oz-in)	23.4 (3.3)	28.4 (4.0)	37.1 (5.2)	33.6 (4.8)
8 Max. angular acceleration	10^3 rad/s^2	46	48	47	48
Intrinsic parameters					
9 Back-EMF constant	V/1000 rpm	1.70	2.05	3.40	3.95
10 Torque constant	mNm/A (oz-in/A)	16.2 (2.29)	19.5 (2.76)	32.5 (4.60)	37.7 (5.33)
11 Terminal resistance	ohm	1.50	2.50	5.8	9.5
12 Motor regulation R/k^2	10^3/Nms	5.73	6.56	5.50	6.69
13 Rotor inductance	mH	0.20	0.30	0.75	1.10
14 Rotor inertia	kgm^2 . 10^{-7}	19.80	17.60	19.80	17.60
15 Mechanical time constant	ms	11	12	11	12

Availability: see enclosed document at the end of the catalogue

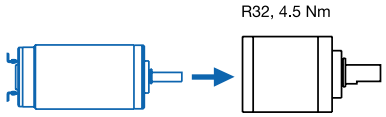

- Thermal resistance:
  rotor-body 4°C/W
  body-ambient 8°C/W
- Thermal time constant - rotor / stator:
  18 s / 630 s
- Max. rated coil temperature: 100°C
- Recom. ambient temperature range:
  -30°C to +65°C (-22°F to +150°F)
- Viscous damping constant:
  1 x 10^{-6} Nms
- Max. axial static force for press-fit: 500 N
- End play: ≤ 150 µm
  Radial play: ≤ 25 µm
  Shaft runout: ≤ 10 µm
- Max. side load at 5 mm from mounting face
  - sleeve bearings 8 N
  - ball bearings 10 N
- Motor fitted with sleeve bearings
  (ball bearings optional)

Max. recommended speed

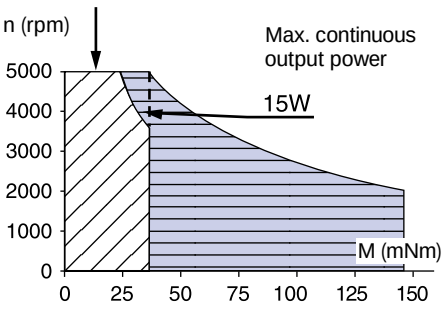

© Portescap

Specifications subject to change without prior notice

escap 28DT12

Graphite/copper commutation system - 13 segments

D.C. Motor 27 Watt

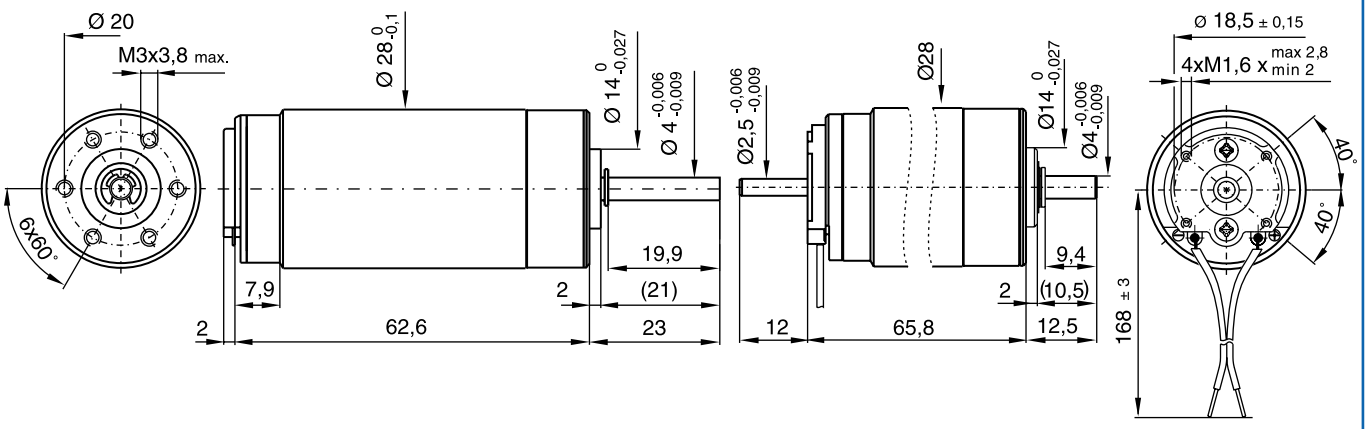

scale: 3:4
dimensions in mm
mass: 200 g

28DT12 •••• • 2 28DT2R12 •••• • 98

Winding types	••••	-222P	-219P	-222E	-219E
Measured values					
1 Measuring voltage	V	12	15	24	28
2 No-load speed	rpm	6800	7100	6900	6900
3 Stall torque	mNm (oz-in)	102 (14.4)	101 (14.3)	126 (17.8)	107 (15.1)
4 Average no-load current	mA	210	180	110	90
5 Typical starting voltage	V	--	--	--	--
Max. recommended values					
6 Max. continuous current	A	2.5	2	1.4	1.1
7 Max. continuous torque	mNm (oz-in)	37 (5.2)	35 (5.0)	41 (5.8)	37 (5.2)
8 Max. angular acceleration	10^3 rad/s^2	73	79	82	83
Intrinsic parameters					
9 Back-EMF constant	V/1000 rpm	1.70	2.05	3.40	3.95
10 Torque constant	mNm/A (oz-in/A)	16.2 (2.29)	19.5 (2.76)	32.5 (4.60)	37.7 (5.33)
11 Terminal resistance	ohm	1.9	2.9	6.2	9.9
12 Motor regulation R/k^2	10^3/Nms	7.3	7.6	5.9	7
13 Rotor inductance	mH	0.20	0.30	0.75	1.10
14 Rotor inertia	kgm^2 . 10^{-7}	20	18	20	18
15 Mechanical time constant	ms	15	14	12	13

Availability: see enclosed document at the end of the catalogue

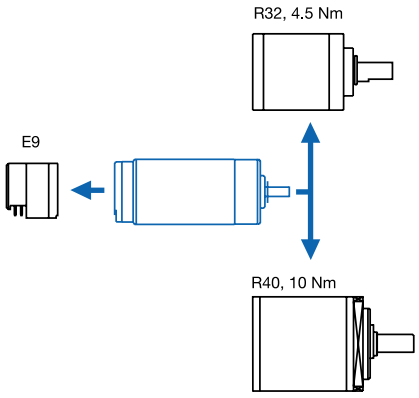

- Thermal resistance:
  rotor-body 4°C/W
  body-ambient 8°C/W
- Thermal time constant - rotor / stator:
  18 s / 630 s
- Max. rated coil temperature: 155°C
- Recom. ambient temperature range:
  -10°C to +80°C (14°F to 176°F)
- Max. axial static force for press-fit: 500 N
- End play: ≤ 150 µm
  Radial play: ≤ 25 µm
  Shaft runout: ≤ 10 µm
- Max. side load at 5 mm from mounting face:
  - sleeve bearings 8 N
  - ball bearings 10 N
- Motor fitted with sleeve bearings
  (ball bearings optional)

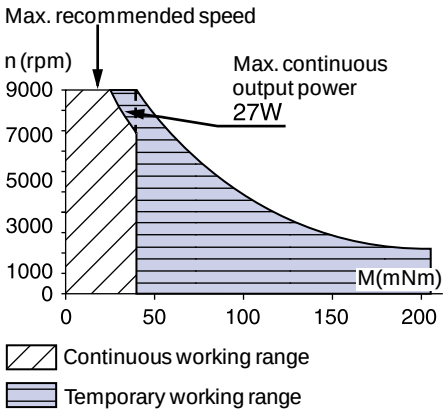

© Portescap

Specifications subject to change without prior notice

escap 34L11

Precious metal commutation system - 13 segments

D.C. Motor 18 Watt

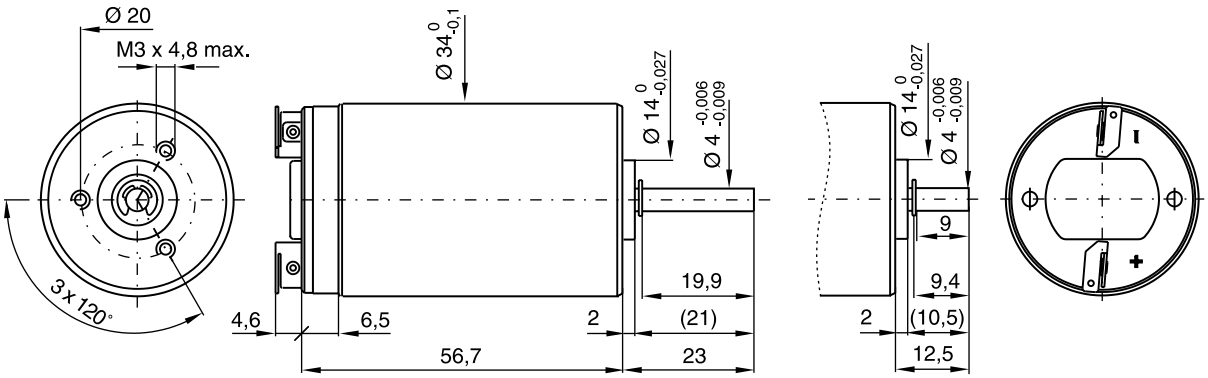

scale: 3:4
dimensions in mm
mass: 230 g

34L11 •••• • 2

34L11 •••• • 1

Winding types	••••	-224E	-219E
Measured values			
1 Measuring voltage	V	15.0	24.0
2 No-load speed	rpm	4250	5390
3 Stall torque	mNm (oz-in)	109 (15.43)	104 (14.72)
4 Average no-load current	mA	27.5	27.5
5 Typical starting voltage	V	0.15	0.20
Max. recommended values			
6 Max. continuous current	A	1.31	0.90
7 Max. continuous torque	mNm (oz-in)	43.0 (6.1)	36.8 (5.2)
8 Max. angular acceleration	10^3 rad/s^2	34	38
Intrinsic parameters			
9 Back-EMF constant	V/1000 rpm	3.50	4.40
10 Torque constant	mNm/A (oz-in/A)	33.4 (4.73)	42 (5.95)
11 Terminal resistance	ohm	4.60	9.7
12 Motor regulation R/k^2	10^3/Nms	4.12	5.49
13 Rotor inductance	mH	0.60	1.00
14 Rotor inertia	kgm^2 . 10^{-7}	32.00	24.00
15 Mechanical time constant	ms	13	13

Availability: see enclosed document at the end of the catalogue

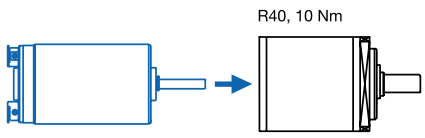

- Thermal resistance:
  rotor-body 4°C/W
  body-ambient 8°C/W
- Thermal time constant - rotor / stator:
  18 s / 760 s
- Max. rated coil temperature: 100°C
- Recom. ambient temperature range:
  -30°C to +65°C (22°F to 150°F)
- Viscous damping constant:
  1 x 10^{-6} Nm
- Max. axial static force for press-fit: 500 N
- End play: ≤ 150 µm
  Radial play: ≤ 25 µm
  Shaft runout: ≤ 10 µm
- Max. side load at 5 mm from mounting face:
  - sleeve bearings 8 N
  - ball bearings 10 N
- Motor fitted with sleeve bearings
  (ball bearings optional)

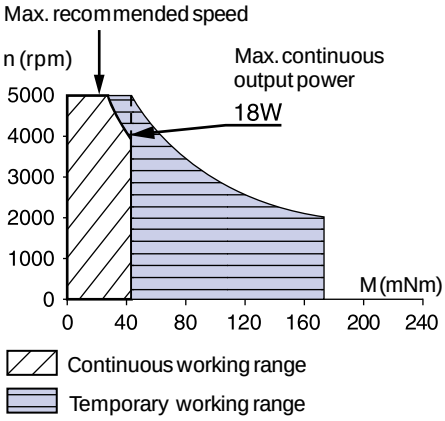

© Portescap

Specifications subject to change without prior notice

escap 35NT2R32

Graphite/copper commutation system - 13 segments

D.C. Motor 37 Watt

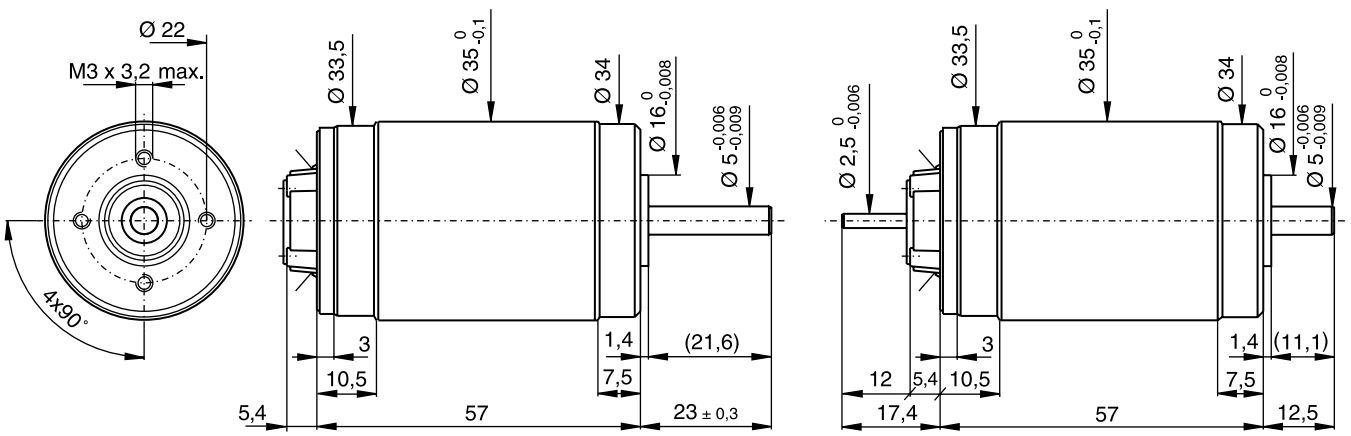

scale: 3:4
dimensions in mm
mass: 320 g

35NT2R32 ▪▪▪▪ • 2

35NT2R32 ▪▪▪▪ • 50

Winding types	▪▪▪▪	-228P	-228E	-416SP
Measured values				
1 Measuring voltage	V	9.0	15.0	24.0
2 No-load speed	rpm	4990	4320	4470
3 Stall torque	mNm (oz-in)	121 (17.12)	148 (20.89)	149 (21.11)
4 Average no-load current	mA	180	90.0	50.0
5 Typical starting voltage	V	--	--	--
Max. recommended values				
6 Max. continuous current	A	3.04	1.87	1.18
7 Max. continuous torque	mNm (oz-in)	48.1 (6.8)	57.9 (8.2)	58.3 (8.3)
8 Max. angular acceleration	10^3 rad/s^2	40	48	45
Intrinsic parameters				
9 Back-EMF constant	V/1000 rpm	1.76	3.40	5.40
10 Torque constant	mNm/A (oz-in/A)	16.8 (2.38)	32.5 (4.60)	51.6 (7.30)
11 Terminal resistance	ohm	1.25	3.30	8.30
12 Motor regulation R/k^2	10^3/Nms	4.43	3.13	3.12
13 Rotor inductance	mH	0.13	0.52	1.30
14 Rotor inertia	kgm^2 . 10^{-7}	48.00	48.00	52.00
15 Mechanical time constant	ms	21	15	16

Availability: see enclosed document at the end of the catalogue

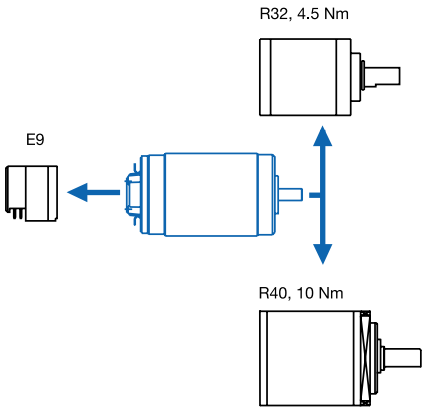

- Thermal resistance:
  rotor-body 4°C/W
  body-ambient 8°C/W
- Thermal time constant - rotor / stator:
  50 s / 920 s
- Max. rated coil temperature: 155°C
- Recom. ambient temperature range:
  -10°C to +80°C (-14°F to +176°F)
- Max. axial static force for press-fit : 100 N
  - shaft supported: 1000 N
- End play: negligible
  Radial play: negligible
  Shaft runout: ≤ 10 µm
- Max. side load at 10 mm from mounting face:
  - ball bearings 35 N
- Motor fitted with ball bearings

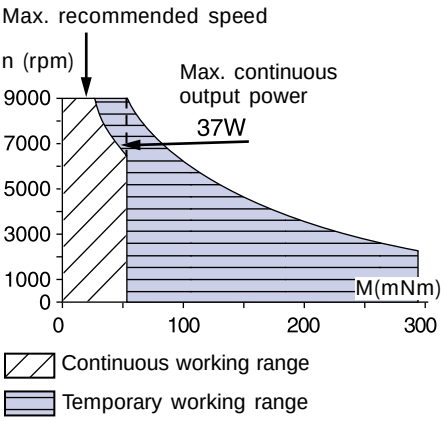

© Portescap

Specifications subject to change without prior notice

escap 35NT2R82

Graphite/copper commutation system - 13 segments

D.C. Motor 90 Watt

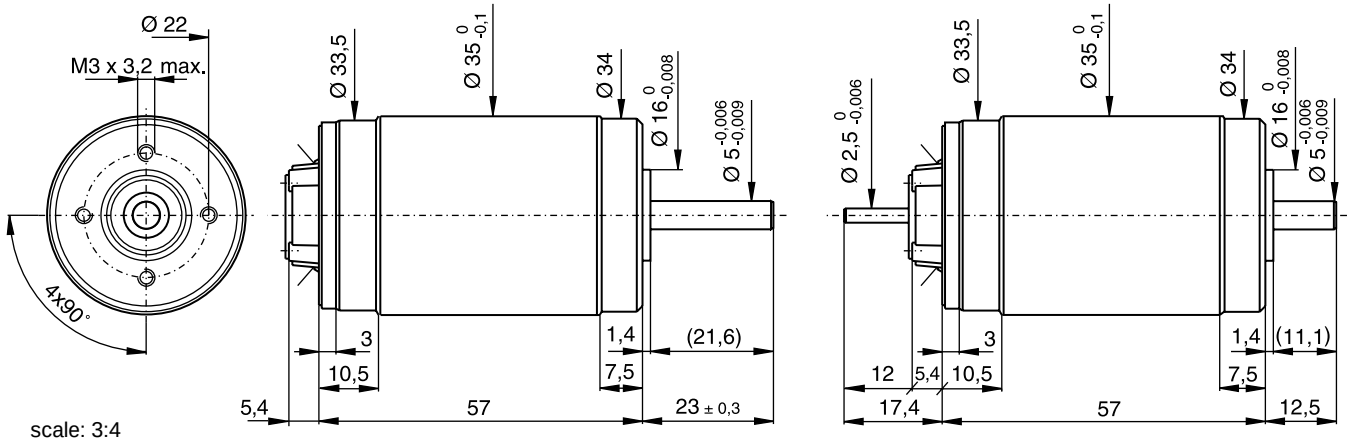

scale: 3:4
dimensions in mm
mass: 310 g

35NT2R82 •••• • 2

35NT2R82 •••• • 50

Winding types	••••	-426P	-426SP
Measured values			
1 Measuring voltage	V	18	32
2 No-load speed	rpm	6700	5900
3 Stall torque	mNm (oz-in)	538 (76)	756 (107)
4 Average no-load current	mA	141	80
5 Typical starting voltage	V	-	-
Max. recommended values			
6 Max. continuous current	A	3.7	2.3
7 Max. continuous torque	mNm (oz-in)	90 (12.7)	115 (16.3)
8 Max. angular acceleration	10^3 rad/s^2	51	64
Intrinsic parameters			
9 Back-EMF constant	V/1000 rpm	2.65	5.40
10 Torque constant	mNm/A (oz-in/A)	25.4 (3.6)	52 (7.3)
11 Terminal resistance	ohm	0.85	2.20
12 Motor regulation R/k^2	10^3/Nms	1.3	0.83
13 Rotor inductance	mH	0.1	0.40
14 Rotor inertia	kgm^2 . 10^{-7}	71.4	71.4
15 Mechanical time constant	ms	9	6

Availability: see enclosed document at the end of the catalogue

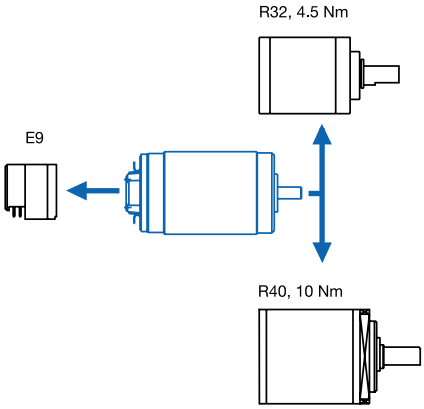

- Thermal resistance:
  rotor-body 4°C/W
  body-ambient 8°C/W
- Thermal time constant - rotor / stator:
  40 s / 920 s
- Max. rated coil temperature: 155°C
- Recom. ambient temperature range:
  -10°C to +80°C (-14°F to +176°F)
- Max. axial static force for press-fit: 100 N
  - shaft supported: 1000 N
- End play: negligible
  Radial play: negligible
  Shaft runout: ≤ 10 µm
- Max. side load at 10mm from mounting face:
  - ball bearings 35 N
- Motor fitted with ball bearings

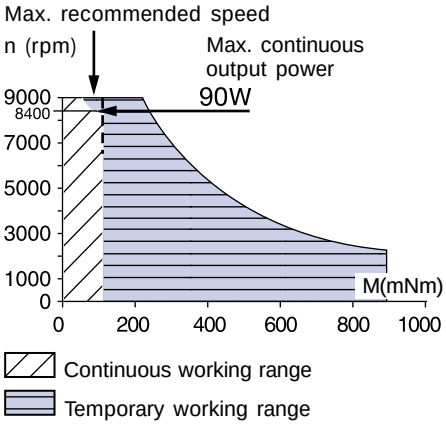

© Portescap

Specifications subject to change without prior notice

ATEX - IP 44

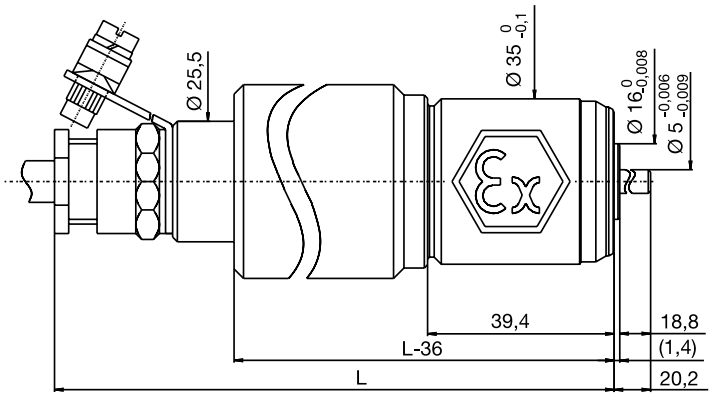

II 2G EEx dIIC T4/T5/T6
PTB 97 ATEX 1095
CE 102

dimensions in mm

35NT EEx flameproof enclosure

- Graphite-copper commutation system, 13 segments
- Max. recom. motor speed 9000 rpm
- Ambient temperature range: -10 to +40°C (-14 to +104°F)
- Mechanical power from 24W to 75W
- Applicable in severe environment containing explosive gases, vapours and sprays
- Satisfies the European norms EN 50014 / 50018 and the new ATEX 94/9/EC norm
- Protection level: IP 44
- This motor series is also available with the following accessories:
  - 3 channel optical encoder E9
  - Line driver compatible RS 485
  - DC tacho (motor-tacho unit)
  - Planetary gearboxes: R32, R40
- Applies to markets such as:
  - petroleum and petro-chemistry
  - chemistry
  - pharmacy industry
  - mines safety

escap

Autoclavable and high speed motors

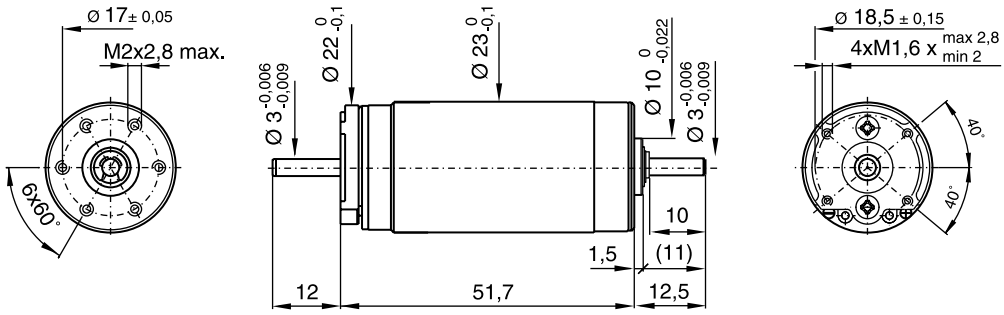

dimensions in mm

23DT2R12 • 84 / • 87

- Available for the motors 17N, 23DT and 28DT
- Complementary autoclavable planetary gearboxes R16 and R32
- Max. motor speed up to 40'000 rpm
- More than 100 cycles autoclavability by damp process
- Mechanical power up to 27W continuous
- High speed for:
  - centrifuges
  - ultra high vacuum pumps
  - medical analysers
  - chiropodist equipment
  - grinding/milling tools
- Applies to markets such as:
  - Hand tools for surgery or dental
  - Drilling tools, saws
  - Implantology equipment
  - etc...

Availability: see enclosed document at the end of the catalogue

© Portescap

Specifications subject to change without prior notice

ELD-3503 V4

Compact DC motor drive circuit

- Linear amplifier 2.5 A, 35 V
- Speed control with a DC tacho or by RxI compensation
- Torque control with trans-conductance amplifier 0.5 A/V
- Suitable for low inductance motors
- Single voltage supply 12... 35 V_{DC}
- Overtemperature, overcurrent and shortcircuit protection
- Software assisted implementation



The card is delivered with an application software on a floppy disk. After entering speed, torque, power supply voltage and thermal conditions, this convenient tool calculates the minimum voltage needed for the specified motor and indicates all limitations imposed by the motor, the card or the power supply. Changes resulting from a different motor winding are displayed immediatley.
The application requires Windows 3.1 or higher.

Specifications

1	Single DC supply	12 to 35 V
2	Maximum permanent output current	2.5 A
3	Maximum peak current	3.5 A (factory set) 7A max.
4	Differential input	± 10 V (± 5 V also possible)
5	Transconductance amplifier	0.5 A/V[1)]
6	Precision of the current regulation	± 5%
7	Linearity of the output	± 2% from 0 to 2 A
8	Cut-off frequency	2 kHz
9	Speed regulation using a tacho	1000 rpm/V[1)]
10	Variation due to the load in tacho mode	± 0.5%
11	Speed regulation using RxI compensation	1000 rpm/V[1)]
12	Variation due to the load in RxI mode	± 5% for n > 500 rpm
13	Precision of the speed regulation	± 5%
14	Cut-off frequency	20 Hz
15	Adjustable permanent current limitation	0 to 3.5 A
16	Slow fuse	2 A
17	Thermal circuit breaker	80 °C
18	Overcurrent indication	LED I_{RMS}
19	Overtemperature indication	LED T_{max}
20	Operating temperature range	0 to 65°C
21	Dimensions	100 x 80 x 30 mm (˚ Europe), 250 g
22	Connections	Screw terminals

[1)] These factors should be multiplied by 2 when the input voltage of the card is changed to ± 5 V

Block diagram

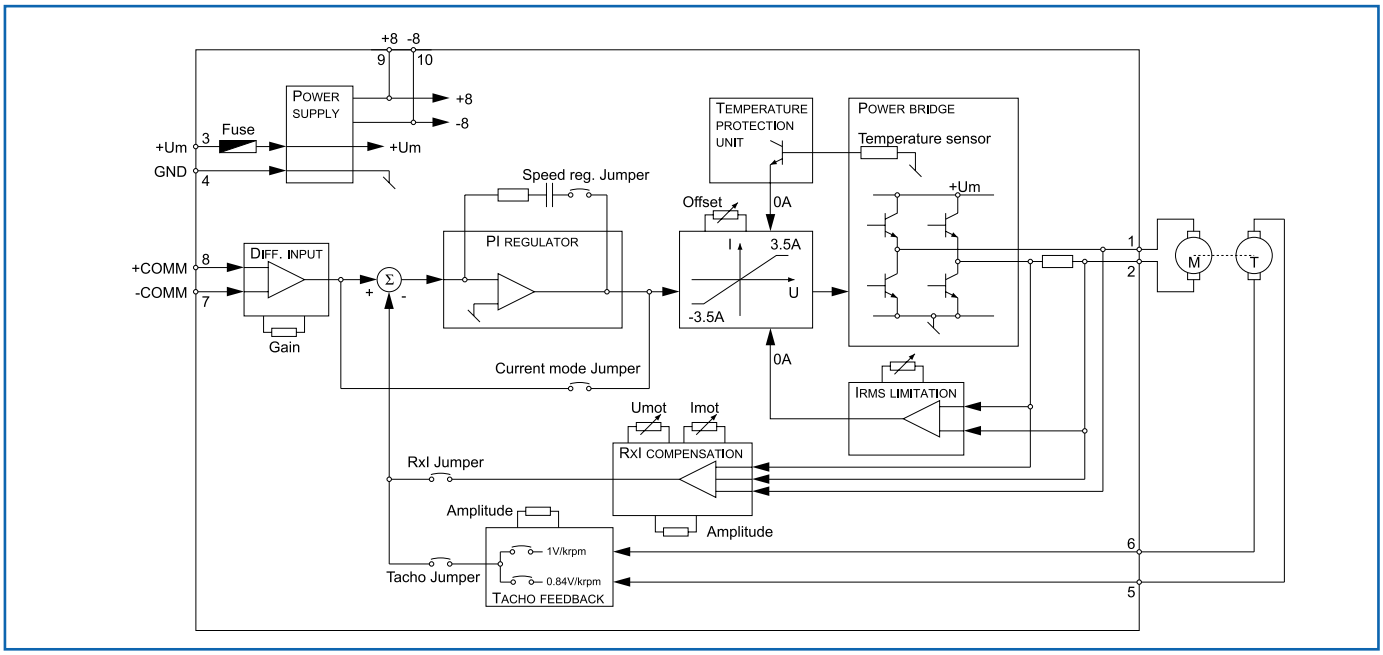

© Portescap

Turbo Disc™ Stepper Motor data sheet section

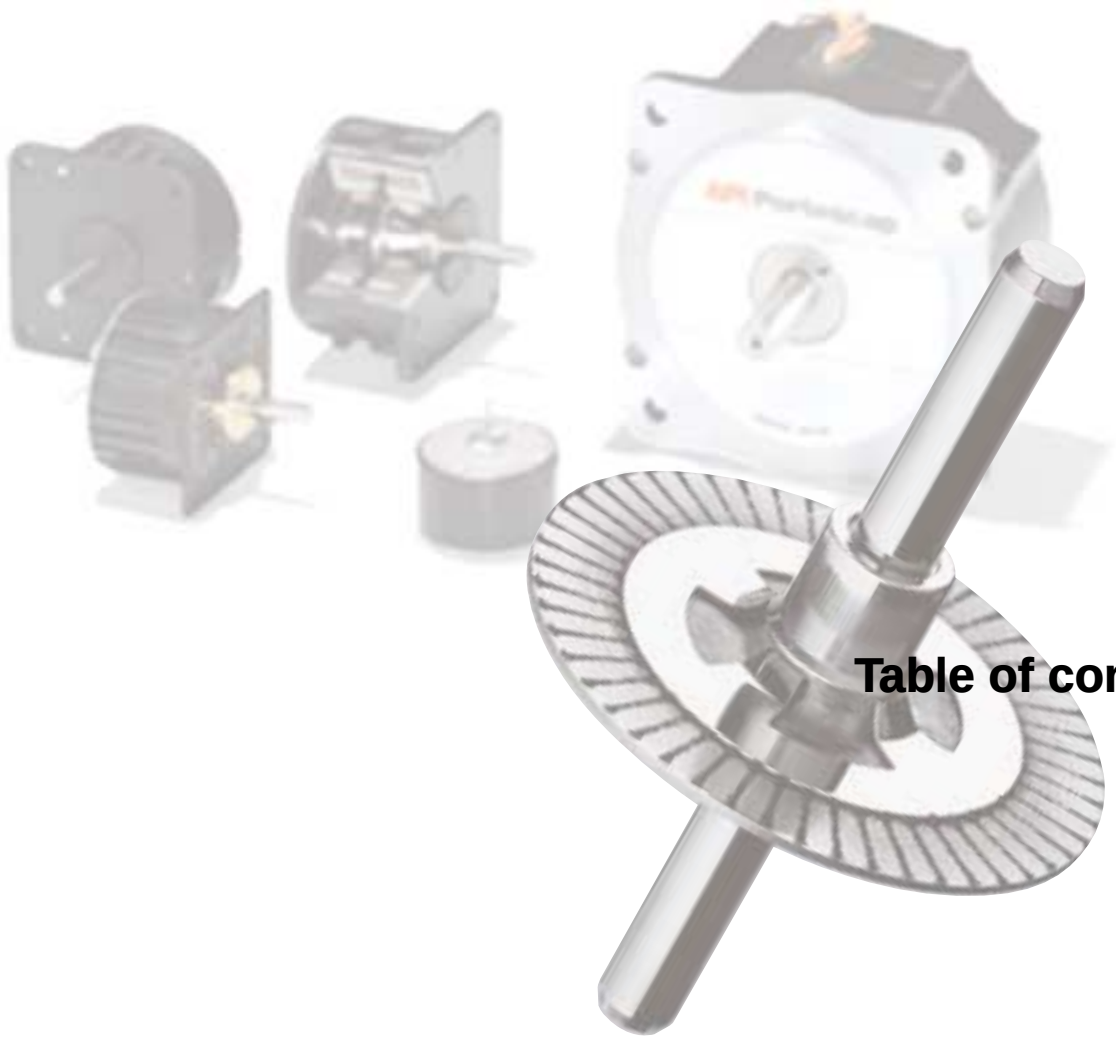

Table of contents

Motor type	page
P010	72
P110	74
P310	76
P430	78
P520	80
PP520	82
P530	84
P532	86
P630	88
P632	90
P850	92
P852	94
ESD-1200-1300 Drive circuit	96
EDB-909 Drive circuit	96
EDM-453 Drive circuit	97
EDM-907 Drive circuit	97
DM224i Drive circuit	98

© Portescap

Turbo Disc™ P010

Stepper motor

Suitable for microstep operation

24 steps/revolution
15° step angle

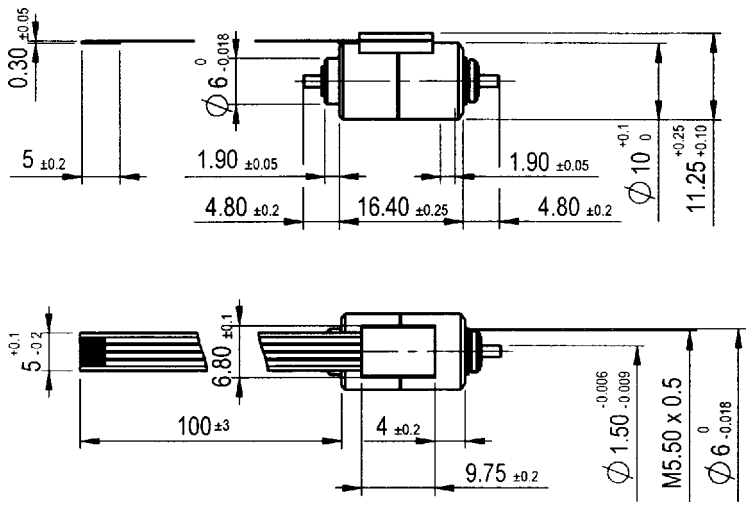

scale: 1:1
dimensions in mm
mass: 9 g

P010-064 - ▭ • 02

Windings available	▭	020	003
Coil dependent parameters		typ	typ
1 Phase resistance	ohm	20	3
2 Phase inductance (1 kHz)	mH	13.7	1.8
3 Nominal phase current (2 ph. on)	A	0.15	0.43
4 Nominal phase current (1 ph. on)	A	0.21	0.6
5 Back-EMF amplitude	V/kst/s	2.30	0.81

Coil independent parameters		typ	max
Torque parameters			
6 Holding torque (nominal current)	mNm (oz-in)	1.85 (0.26)	
7 Holding torque (1.5 x nominal current) (1)	mNm (oz-in)	2.6 (0.37)	
8 Detent torque amplitude and friction	mNm (oz-in)	0.4 (0.06)	
Thermal parameters			
9 Thermal resistance coil-ambient (2)	°C/W	100	
Angular accuracy			
10 Absolute accuracy (2 ph. on full-step mode)	% full-step		±10
Mechanical parameters			
11 Rotor inertia	$kgm^2.10^{-7}$	0.07	
Other parameters			
12 Natural resonance frequency (nom. current)	Hz	200	
13 Electrical time constant	ms	0.6	
14 Angular acceleration (nominal current)	rad/s^2	265000	

- Max. rated coil temperature: 130°C
- Recom. ambient temperature range: -20°C to +50°C
- Radial shaft play (2N): 30 µm
  Axial shaft play (2N): 40 µm
- Max. radial load: 2.5 N
  Max. axial load[3]: 2.5 N
- "Power rate" (nominal current): 0.49 kW/s
- with ball bearings

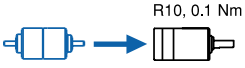

[1] Measurement with 1 phase on. The max. coil temperature must be respected
[2] Motor unmounted
[3] Shaft must be supported when press-fitting a pulley or a pinion

© Portescap

Specifications subject to change without prior notice

P010-064-020, U = 3V, Rs = 0 ohm
Voltage drive type L/R

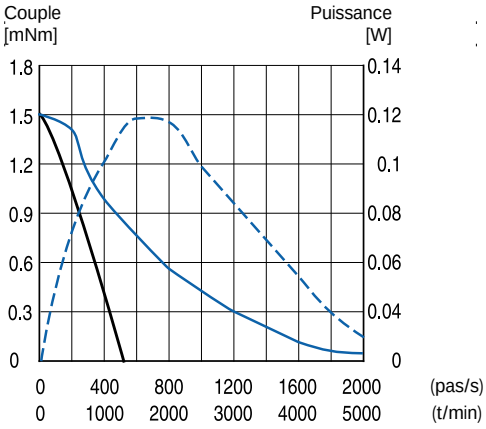

P010-064-020, U = 4V, Rs = 0 ohm
Voltage drive type L/R

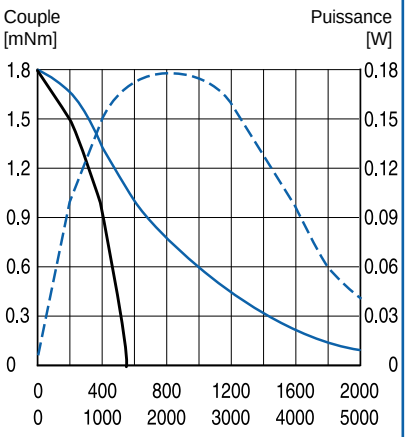

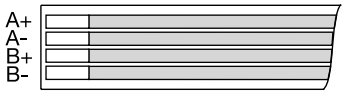

Kapton Circuit
Reinforcement for connector
ZIF ZMP step 1 mm

Motor connections

P010-064-2.5 U = 6V, Rs = 2.5 ohm
Voltage drive type L/R

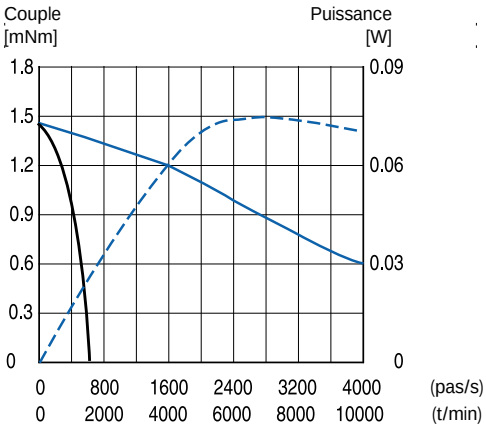

P010-064-2.5 I = 0.6A, U = 12V
Current source

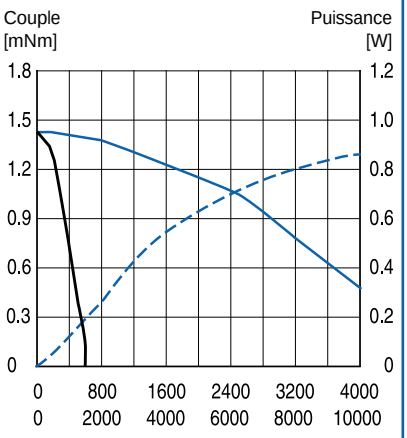

Notes

The high power/size ratio and high peak speed dedicate this motor to the most demanding fields of applications.
Its extended pull-in range and excellent efficiency are benefits for straight forward battery driven operation.

Pull-in range
Pull-out range
Power output

Pull-in is measured with a load inertia equal to the rotor inertia.

Availability: see enclosed document at the end of the catalogue

© Portescap

Specifications subject to change without prior notice

Turbo Disc™ P110

Stepper motor

Suitable for microstep operation

24 steps/revolution
15° step angle

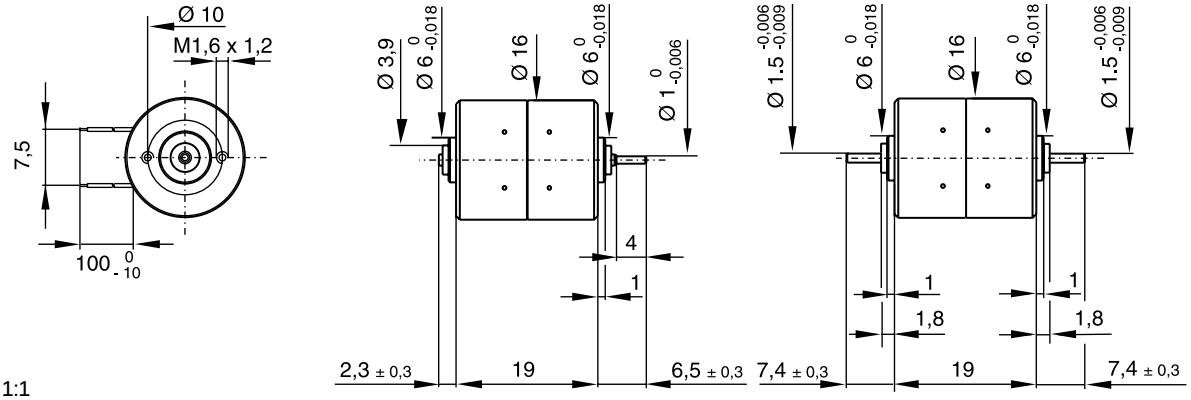

scale: 1:1
dimensions in mm
mass: 23 g
lead wires: 100 0 -10 mm

P110-064 - •••• • 08

P110-064 - •••• • 12

Windings available	••••	068	015	2.5
Coil dependent parameters		typ	typ	typ
1 Phase resistance	ohm	62	15	2.5
2 Phase inductance (1 kHz)	mH	46	12	2.2
3 Nominal phase current (2 ph. on)	A	0.12	0.25	0.65
4 Nominal phase current (1 ph. on)	A	0.17	0.35	0.9
5 Back-EMF amplitude	V/kst/s	10.8	5.2	2
Coil independent parameters		min	typ	max
Torque parameters				
6 Holding torque (nominal current)	mNm (oz-in)	6.4 (0.91)	7 (1.0)	7.6 (1.08)
7 Holding torque (1.5 x nominal current) [1]	mNm (oz-in)	9.2 (1.31)	10 (1.4)	10.8 (1.54)
8 Detent torque amplitude and friction	mNm (oz-in)	0.6 (0.09)	1 (0.1)	1.5 (0.21)
Thermal parameters				
9 Thermal resistance coil-ambient [2]	°C/W		45	
Angular accuracy				
10 Absolute accuracy (2 ph. on full-step mode)	% full-steps		±3	±5
Mechanical parameters				
11 Rotor inertia	$kgm^2.10^{-7}$		0.40	
Other parameters				
12 Natural resonance frequency (nominal current)	Hz		160	
13 Electrical time constant	ms		0.8	
14 Angular acceleration (nominal current)	rad/s^2		167000	

- Max. rated coil temperature: 130°C
- Recom. ambient temperature range: -20°C to +50°C

- Radial shaft play (2N): 30 µm
  Axial shaft play (2N): 40 µm
- Max. radial load: 0.5 N
  Max. axial load[3]: 0.5 N

- Test voltage (1 min): 300 V_{RMS}
- "Power rate" (nominal current): 1.2 kW/s

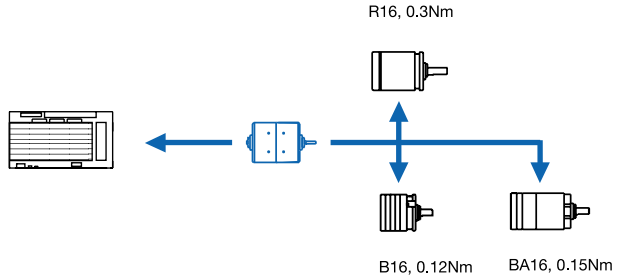

[1] Measurement with 1 phase on. The max. coil temperature must be respected.

[2] Motor unmounted.

[3] Shaft must be supported for press-fitting a pulley or a pinion.

© Portescap

Specifications subject to change without prior notice

P110-064-015, U = 6V, Rs = 0 ohm
P110-064-068, U = 12V, Rs = 0 ohm
Voltage driver type L/R

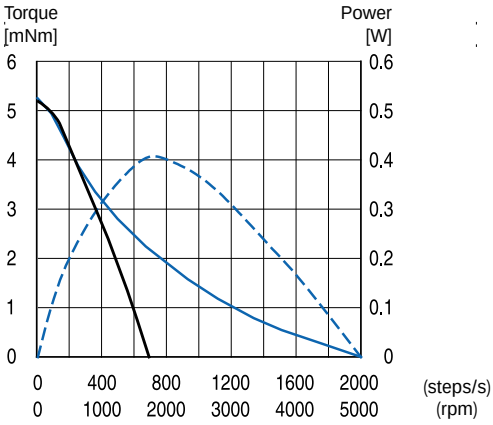

P110-064-015, U = 12V, Rs = 15 ohm
P110-064-068, U = 24V, Rs = 68 ohm
Voltage driver type L/R

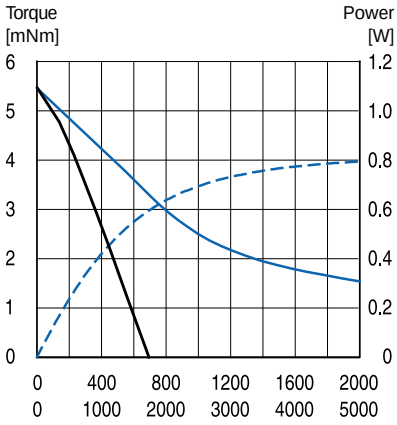

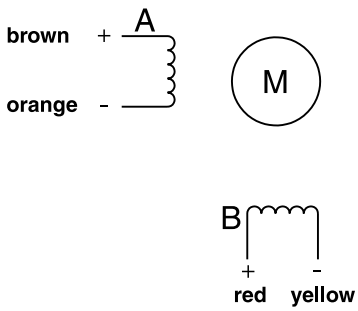

Motor connections

P110-064-015
Voltage driver type L/R
U = 24V, Rs = 47 ohm

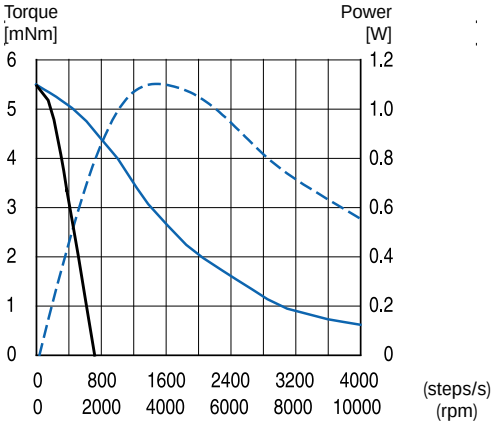

P110-064-2.5
Current chopper driver
I = 0.9A, U = 24V

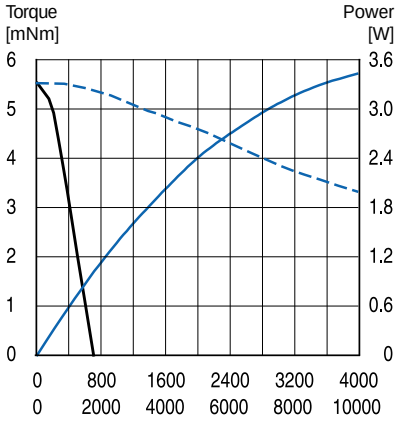

Executions available :

- 08 see drawing
- 12 see drawing
- 08 for gearbox B16
- 12 for gearbox R16

The standard version available from stock is with sleeve bearings. This motor is also available with ball bearings (execution •13) and, on request, with the encoder D type (execution •19).

Iron saturation effect
Torque / Current
One phase on

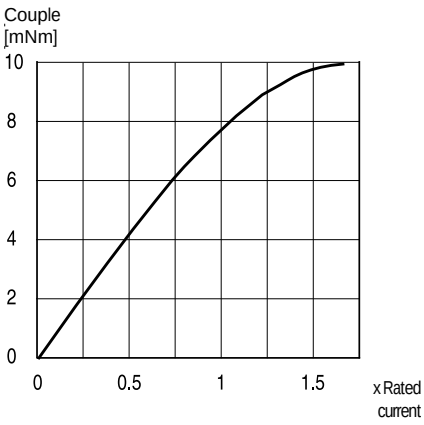

Notes

The high power/size ratio and high peak speed dedicate this motor to the most demanding fields of applications.

Its extended pull-in range and excellent efficiency are benefits for straight forward battery driven operation.

The following escap® drive circuits are recommended with the P110 motor, depending on the mode and the dynamic performance required: ESD-1200 (p. 96), EDM-453 (p. 97).

Pull-in range
Pull-out range
Power output

Pull-in is measured with a load inertia equal to the rotor inertia.

Availability: see enclosed document at the end of the catalogue

© Portescap

Specifications subject to change without prior notice

Turbo Disc™ P310

Stepper motor

Suitable for microstep operation

60 steps/revolution
6° step angle

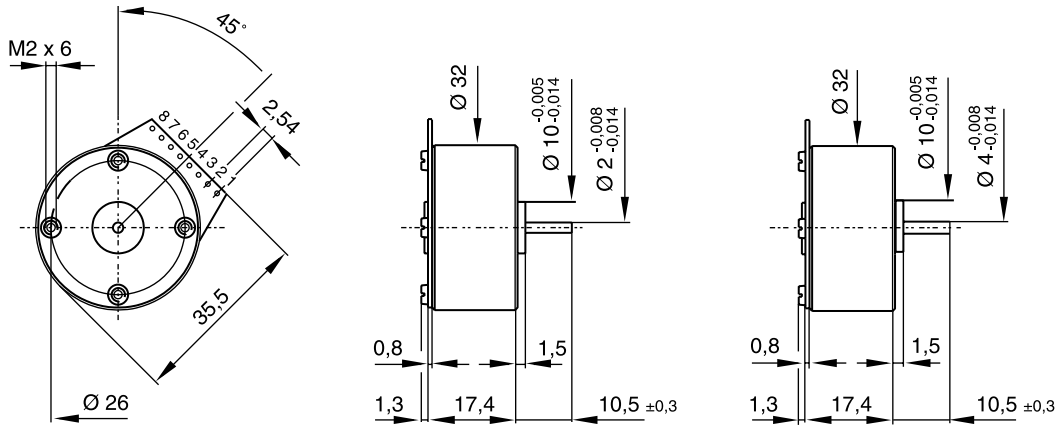

scale: 2:3
dimensions in mm
mass: 40 g

P310-158 - •••• • 09

P310-158 - •••• • 10

Windings available	••••	170	170	005	005
		coils in series	coils in parallel	coils in series	coils in parallel
Coil dependent parameters		typ	typ	typ	typ
1 Phase resistance	ohm	332	83	10.5	2.6
2 Phase inductance (1 kHz)	mH	184	46	6.4	1.6
3 Nominal phase current (2 ph. on)	A	0.06	0.12	0.36	0.72
4 Nominal phase current (1 ph. on)	A	0.09	0.17	0.51	1
5 Back-EMF amplitude	V/kst/s	18	9	3.2	1.6

Coil independent parameters [1]		min	typ	max
Torque parameters				
6 Holding torque (nominal current)	mNm (oz-in)	11.5 (1.6)	14 (2)	16.5 (2.4)
7 Holding torque (1.5 x nominal current) [2]	mNm (oz-in)	23 (3.8)	28 (4)	33 (4.8)
8 Detent torque amplitude and friction	mNm (oz-in)	1.4 (0.2)	2.5 (0.3)	3 (0.4)
Thermal parameters				
9 Thermal resistance coil-ambient [3]	°C/W		25	
Angular accuracy				
10 Absolute accuracy (2 ph. on full-step mode)	% full-steps		±3.5	±5
Mechanical parameters				
11 Rotor inertia	$kgm^2.10^{-7}$		0.86	
Other parameters				
12 Natural resonance frequency (nominal current)	Hz		230	
13 Electrical time constant	ms		0.6	
14 Angular acceleration (nominal current)	rad/s^2		140 000	

- Max. rated coil temperature: 130°C
- Recom. ambient temperature range: -20°C to +50°C
- Radial shaft play (5N)[4]: 35 µm
  Axial shaft play (5N)[4]: 100 µm
- Max. radial load[5] in N: 1 (10)*
  Max. axial load[6] in N: 0.5 (20)*
- Test voltage (1 min): 500 V_{RMS}
- "Power rate" (nominal current): 1.7 kW/s

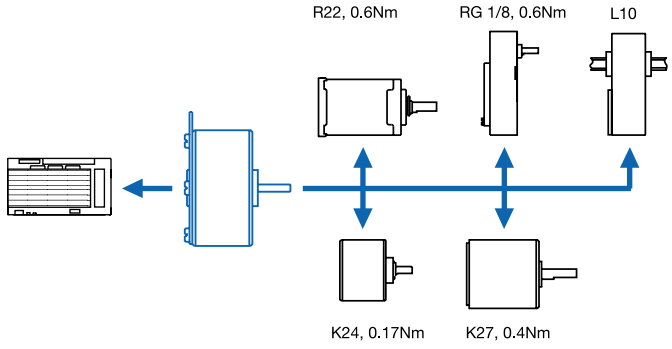

[1] Bipolar driver.
[2] The maximum coil temperature must be respected.
[3] Motor unmounted.
[4] Sleeve bearing version.
[5] Sleeve bearing version. Load applied at 8 mm from mounting face.
[6] Sleeve bearing version. Shaft must be supported for press-fitting a pulley or pinion.
* Fitted with ball bearings.

© Portescap

Specifications subject to change without prior notice

P310-158-005
Coils in serie
Voltage driver type L/R
0Ω series resistor, 7V

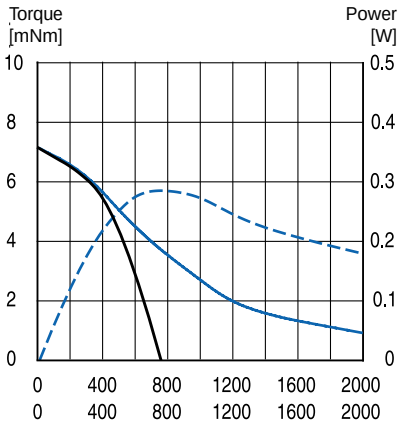

P310-158-170
Coils in serie
Voltage driver type L/R
56Ω series resistor, 24V

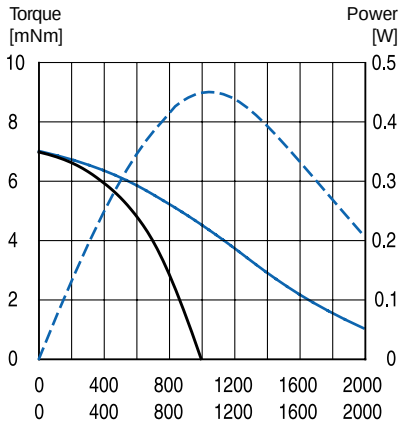

P310-158-170
Coils in parallel
Voltage driver type L/R
120 ohm series resistor, 24V

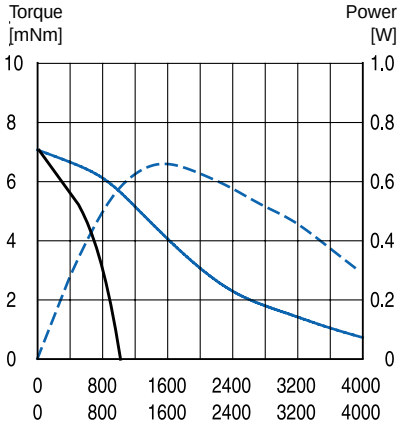

P310-158-005
Coils in parallel
escap® EDM-453,
I = 1A, U = 24V

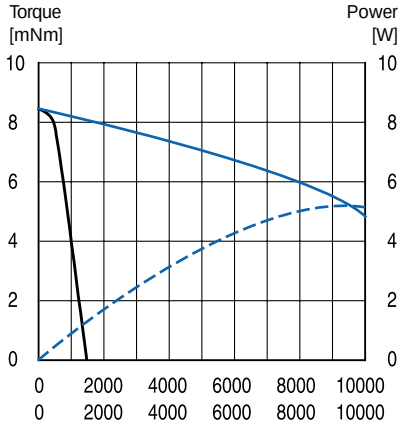

P310-158-005
Coils in parallel
escap® ESD-1200,
I = 1A, U = 24V

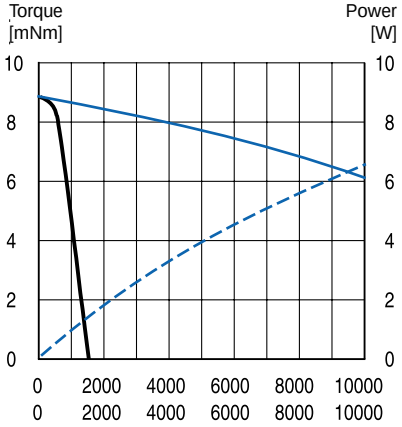

P310-158-005
Coils in serie
escap® ESD-1200,
I =0.5A, U = 45V

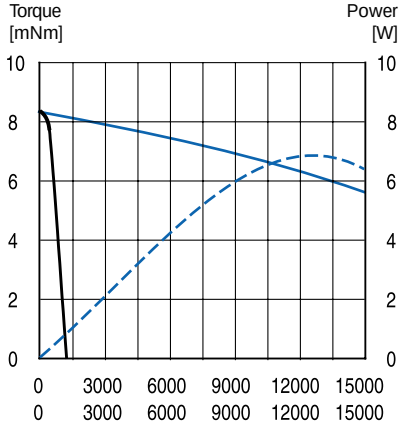

Pull-in range
Pull-out range
Power output

Pull-in is measured with a load inertia equal to the rotor inertia.

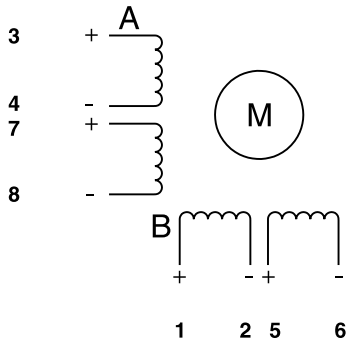

Motor connections

Executions available from stock :

- 09 sleeve bearings, diameter 2
- 10 bearings, diameter 4
- 09 & L10, K24, K27, R22, RG 1/8

Particular versions include options such as series or parallel connections prewired on the PC board, special shafts (hollow shaft), windings, and so forth.

Notes

The high power/size ratio and high peak speed dedicate this motor to the most demanding fields of applications.

Its extended pull-in range and excellent efficiency are benefits for straight forward battery driven operation.

The motor is energised with nominal current unless otherwise specified.

The following escap® drive circuits are recommended with the P310 motor, depending on the drive mode and the dynamic performance required: EDM-453 (p.96), ESD-1200 (p.97).

Availability: see enclosed document at the end of the catalogue

© Portescap

Specifications subject to change without prior notice

Turbo Disc™ P430

Stepper motor

Suitable for microstep operation

100 steps/revolution
3.6° step angle

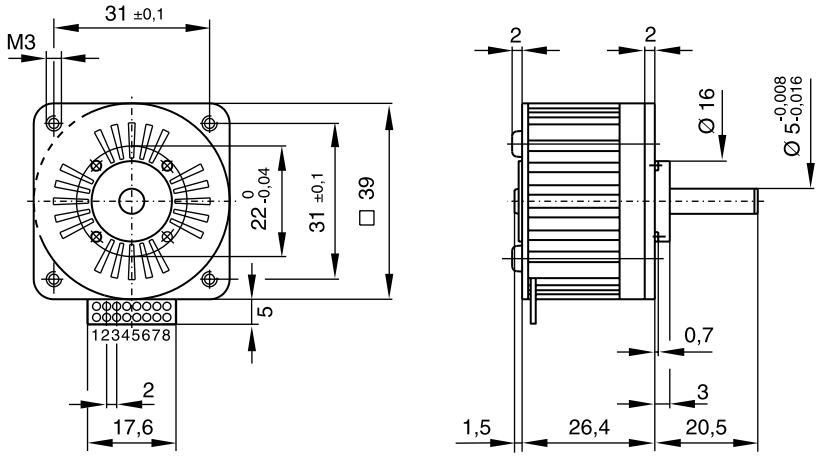

scale: 2/3
dimensions in mm
mass: 100 g

P430-258 - •••• • 01

Windings available	••••	013	013	005	005
		coils in series	coils in parallel	coils in series	coils in parallel
Coil dependent parameters		typ	typ	typ	typ
1 Phase resistance	ohm	26	6.5	10	2.5
2 Phase inductance (1 kHz)	mH	40	10	14	3.5
3 Nominal phase current (2 ph. on)	A	0.34	0.68	0.56	1.12
4 Nominal phase current (1 ph. on)	A	0.5	1	0.8	1.6
5 Back-EMF amplitude	V/kst/s	7.5	3.8	4.7	2.3

Coil independent parameters [1]

Torque parameters		min	typ	max
6 Holding torque (nominal current)	mNm (oz-in)	50 (7.1)	60 (8.5)	70 (9.9)
7 Holding torque (2 x nominal current) [2]	mNm (oz-in)	75 (10.6)	90 (12.7)	105 (14.9)
8 Detent torque amplitude and friction	mNm (oz-in)	1.5 (0.2)	3.5 (0.5)	6.5 (0.9)
Thermal parameters				
9 Thermal resistance coil-ambient [3]	°C/W		11	
Angular accuracy				
10 Absolute accuracy (2 ph. on full-step mode)	% full-steps			±3
Mechanical parameters				
11 Rotor inertia	$kgm^2.10^{-7}$		3	
Other parameters				
12 Natural resonance frequency (nominal current)	Hz		360	
13 Electrical time constant	ms		1.5	
14 Angular acceleration (nominal current)	rad/s^2		200 000	

- Max. rated coil temperature: 130°C
- Recom. ambient temperature range: -20°C to +50°C
- Radial shaft play (5N): 15 µm
  Axial shaft play (5N): 10 µm
- Max. radial load[4]: 20N
  Max. axial load[5]: 30N
- Test voltage (1 min): 500 V_{RMS}
- "Power rate" (nominal current): 12 kW/s

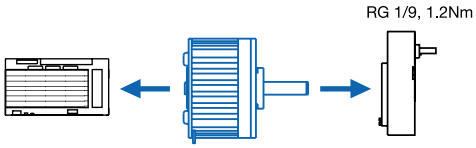

[1] Bipolar driver.
[2] The maximum coil temperature must be respected.
[3] Motor unmounted.
[4] Load applied at 12 mm from mounting face.
[5] Shaft must be supported for press-fitting a pulley or pinion.

© Portescap

Specifications subject to change without prior notice

P430-258-013
Coils in series
Voltage driver type L/R
47Ω series resistor, 36V

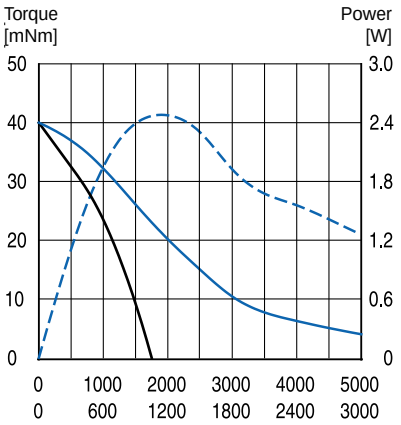

P430-258-005
Coils in series
Voltage driver type L/R
33Ω series resistor, 36V

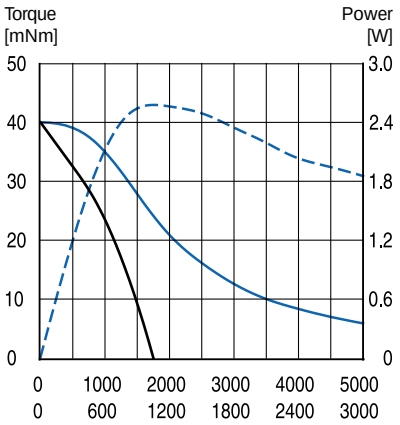

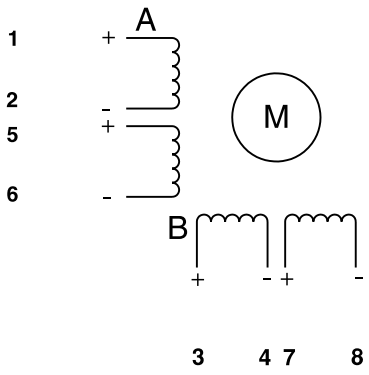

Motor connections

P430-258-013
Coils in parallel
escap® EDM-453 or DM224-i
I = 1A

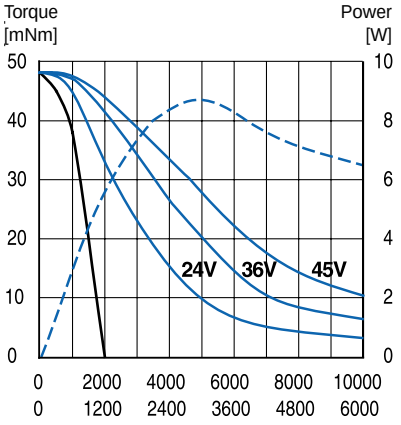

P430-258-005
Coils in parallel
escap® EDM-453,
I = 1.5A

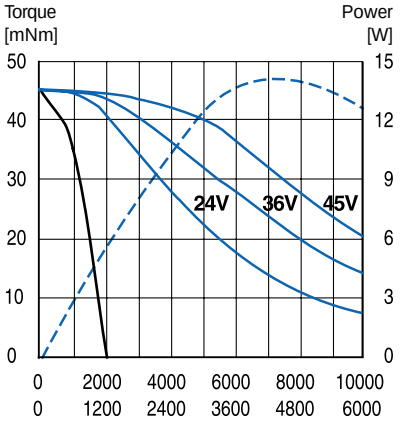

Executions available from stock :

- 01 see drawing
- 01 & RG1/9

Particular versions include options such as special shafts and so forth.

P430-258-013
Coils in parallel
escap® ESD-1200,
I = 1A

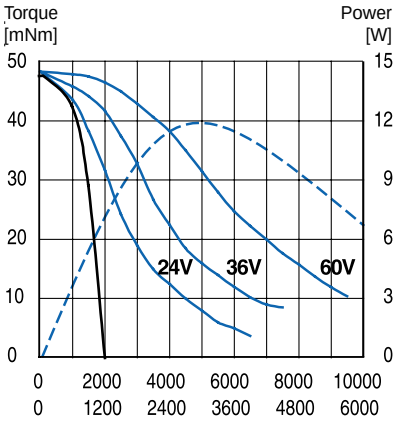

P430-258-005
Coils in parallel
escap® ESD-1200,
I =1.6A

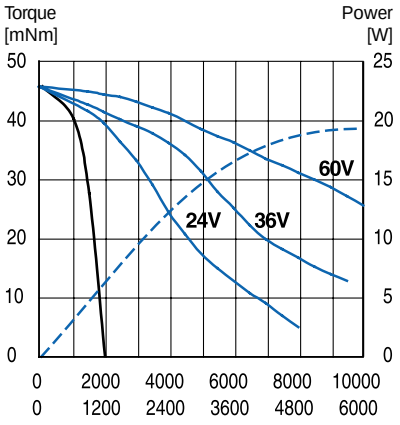

Notes

The speed scale is indicated in full-steps/s for all drive modes.

The motor is driven in half-steps unless otherwise specified.

The motor is energised with nominal current unless otherwise specified.

Pull-in is measured with a load inertia equal to the rotor inertia.

The following drive circuits are recommended with the P430 motor, depending on the drive mode and the dynamic performance required: DM224i, EDM-453, ESD-1200.

Pull-in range
Pull-out range
Power output

Pull-in is measured with a load inertia equal to the rotor inertia.

Availability: see enclosed document at the end of the catalogue

© Portescap

Specifications subject to change without prior notice

Turbo Disc™ P520

Stepper motor

Suitable for microstep operation

100 steps/revolution
3.6° step angle

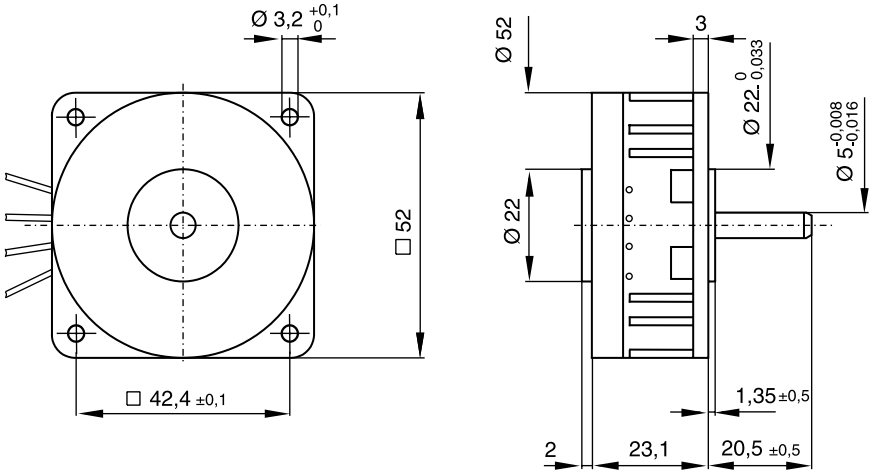

scale: 2/3
dimensions in mm
mass: 180 g
lead wires: 195 ±10 mm
0.25 mm² (AWG 24)

P520-254 - •••• • 60

Windings available	••••	013	004	0.7
Coil dependent parameters		typ	typ	typ
1 Phase resistance	ohm	13.5	4.4	0.7
2 Phase inductance (1 kHz)	mH	27	8	1.3
3 Nominal phase current (2 ph. on)	A	0.5	0.9	2.3
4 Nominal phase current (1 ph. on)	A	0.75	1.3	3.3
5 Back-EMF amplitude	V/kst/s	9.8	5.5	2.1
Coil independent parameters [1]		min	typ	max
Torque parameters				
6 Holding torque (nominal current)	mNm (oz-in)	102 (15)	120 (17)	140 (20)
7 Holding torque (2 x nominal current) [2]	mNm (oz-in)	175 (25)	205 (29)	240 (34)
8 Detent torque amplitude and friction	mNm (oz-in)	4 (0.5)	10 (1.4)	15 (2.1)
Thermal parameters				
9 Thermal resistance coil-ambient [3]	°C/W		9.5	
Angular accuracy				
10 Absolute (2 ph. on full-step mode/microstep)	% full-steps		±3/±5	±5/±8
Mechanical parameters				
11 Rotor inertia	$kgm^2.10^{-7}$		12	
Other parameters				
12 Natural resonance frequency (nominal current)	Hz		250	
13 Electrical time constant	ms		1.8	
14 Angular acceleration (nominal current)	rad/s^2		100000	

- Max. rated coil temperature: 130°C
- Recom. ambient temperature range: -20°C to +50°C

- Radial shaft play (5N): 15 µm
  Axial shaft play (5N): 10 µm
- Max. radial load[4]: 20N
  Max. axial load[5]: 30N

- Test voltage (1 min): 500 V_{RMS}
- "Power rate" (nominal current): 12 kW/s

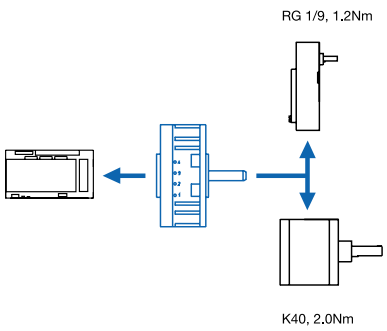

[1] Bipolar driver.
[2] The maximum coil temperature must be respected.
[3] Motor unmounted.
[4] Load applied at 12 mm from mounting face.
[5] Shaft must be supported for press-fitting a pulley or pinion.

© Portescap

Specifications subject to change without prior notice

P520-254-013
Voltage driver type L/R
33Ω series resistor, 36V

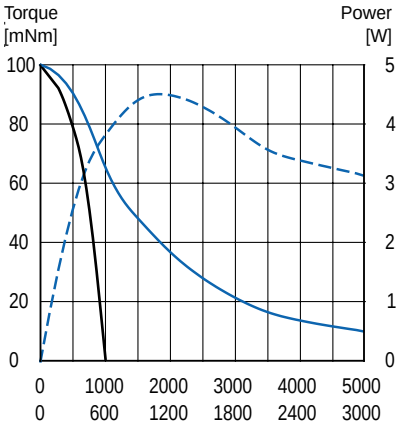

P520-254-004
escap® EDM-453,
I =1.3A

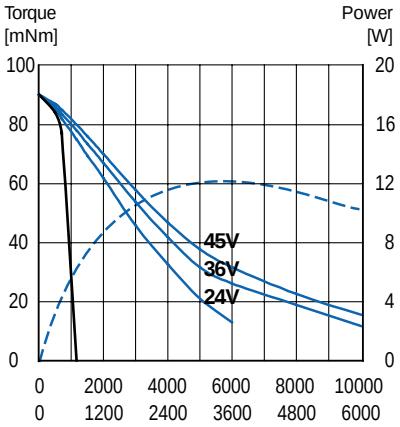

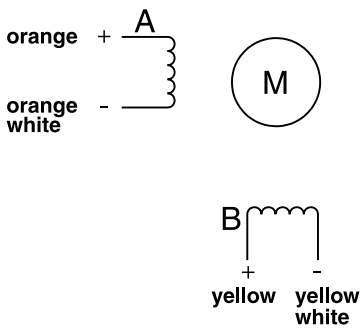

Motor connections

P520-254-004
escap® ESD-1200,
I =0.9A

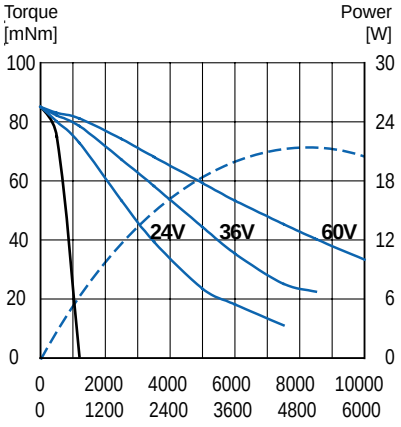

P520-254-004
escap® ESD-1200,
I =1.4A

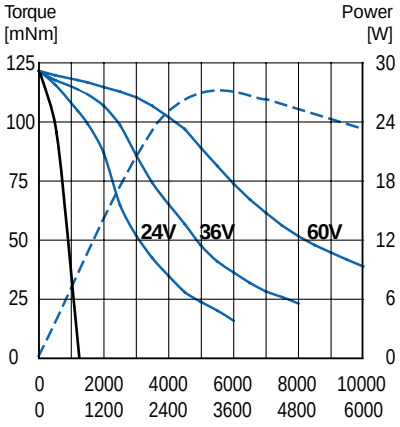

Executions available from stock :

- 60 see drawing
- 60 with gearbox RG1/9

The P520 motor is also available from stock with the K40 gearboxe.

Particular versions include options such as special shafts (hollow shaft), other gearboxes optical encoders and so forth.

P520-254-0.7
escap® EDM-453 ou DM224-i,
I =3A

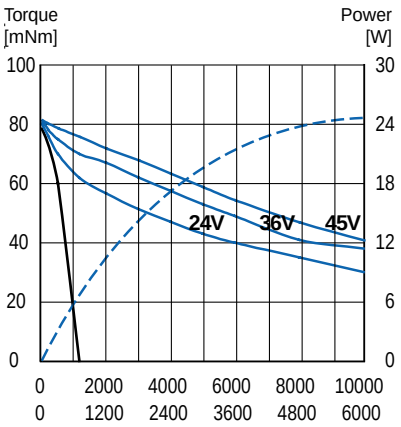

P520-254-0.7
escap® ESD-1300,
I =2.3A

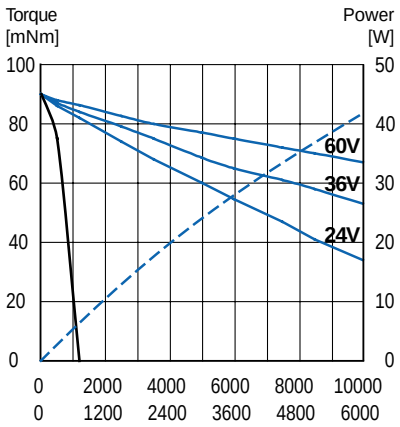

Notes

The speed scale is indicated in full-steps/s for all drive modes.

The motor is driven in half-steps unless otherwise specified.

The motor is energised with nominal current unless otherwise specified.

The following escap® drive circuits are recommended with the P520 motor, depending on the drive mode and the dynamic performance required: DM224i, EDM-453, ESD-1200, ESD-1300.

Pull-in range
Pull-out range
Power output

Pull-in is measured with a load inertia equal to the rotor inertia.

Availability: see enclosed document at the end of the catalogue

© Portescap

Specifications subject to change without prior notice

Turbo Disc™ PP520

Stepper motor

With integrated position sensors

100 steps/revision
3.6° step angle

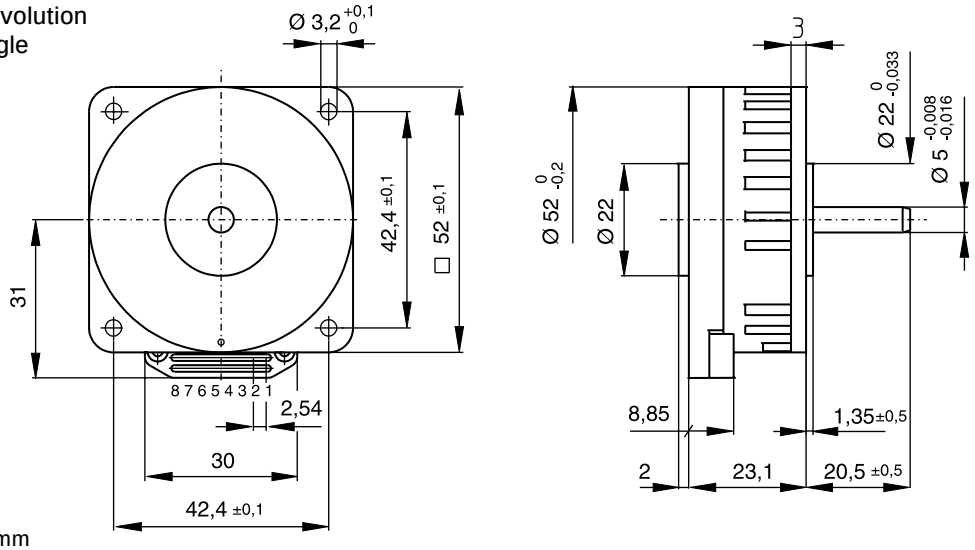

scale: 2/3
dimensions in mm
mass: 170 g

PP520-258 - •••• • 01

Windings available	••••	013	004	0.7
Coil dependent parameters		typ	typ	typ
1 Phase resistance	ohm	13.5	4.4	0.7
2 Phase inductance (1 kHz)	mH	27	8	1.3
3 Nominal phase current (2 ph. on)	A	0.5	0.9	2.3
4 Nominal phase current (1 ph. on)	A	0.75	1.3	3.3
5 Back-EMF amplitude	V/kst/s	9.8	5.5	2.1
Coil independent parameters[1]		min	typ	max
Torque parameters				
6 Holding torque (nominal current)	mNm (oz-in)	102 (14.4)	120 (17)	140 (19.8)
7 Holding torque (1.5 x nominal current) [2]	mNm (oz-in)	175 (24.8)	205 (29)	240 (34)
8 Detent torque amplitude and friction	mNm (oz-in)	4 (0.6)	10 (1.4)	15 (2.1)
Thermal parameters				
9 Thermal resistance coil-ambient [3]	°C/W		9.5	
Angular accuracy				
10 Absolute accuracy (2 ph. on full-step mode)	% full-steps		±3	±5
Mechanical parameters				
11 Rotor inertia	$kgm^2.10^{-7}$		12	
Other parameters				
12 Natural resonance frequency (nominal current)	Hz		250	
13 Electrical time constant	ms		1.8	
14 Angular acceleration (nominal current)	rad/s^2		100000	
Hall sensor [6]				
15 Supply voltage	V	5		24
16 Operating temperature	°C	-40		125
17 Signal periods per revolution [7]	-		25	
18 Elec. angle between motor ph./hall signal	degrees	35	45	55

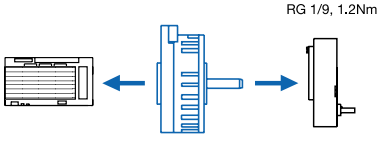

- Max. rated coil temperature: 130°C
- Recom. ambient temperature range: -20°C to +50°C
- Radial shaft play (5N): 15 µm
  Axial shaft play (5N): 10 µm
- Max. radial load[4]: 20 N
  Max. axial load[5]: 30 N
- Test voltage (1 min): 500 V_{RMS}
- "Power rate" (nominal current): 12 kW/s

[1] Bipolar driver
[2] The maximum coil temperature must be respected
[3] Motor unmounted
[4] Load applied at 12 mm from mounting face
[5] Shaft must be supported for press-fitting a pulley or pinion
[6] Two sensors with output signals in quadrature. Open-collector (I_{max} = 10mA)
[7] When using both signals' edges, a resolution of 100 positions per rev. is obtained

© Portescap

Specifications subject to change without prior notice

PP520-258-013
Voltage driver type L/R
33Ω in Serie, 36V

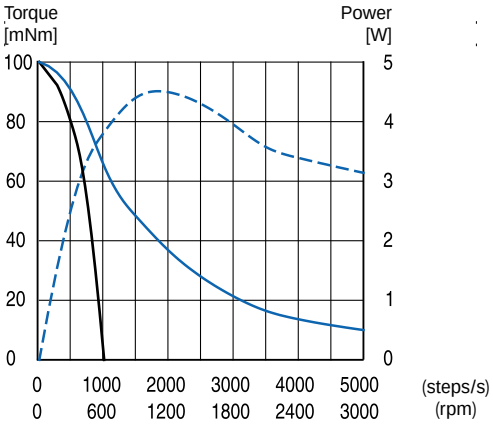

PP520-258-004
escap® ESD-1200,
U = 36V

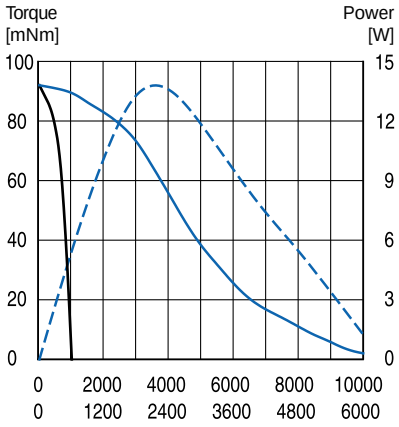

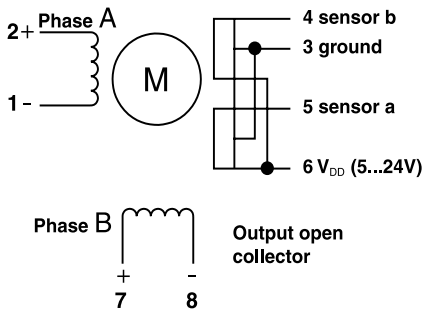

Motor connections

PP520-258-0.7
escap® ESD-1300,
U = 36V

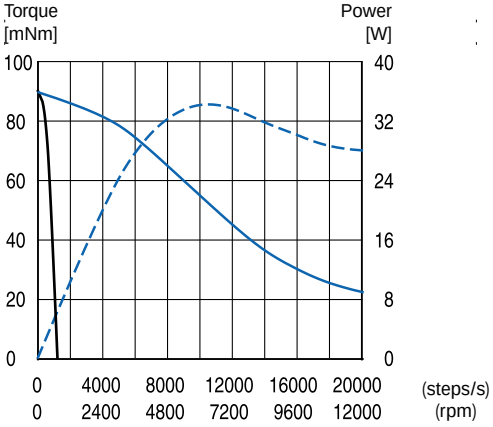

PP520-258-004
Autocommutation mode
Phase advance 45°

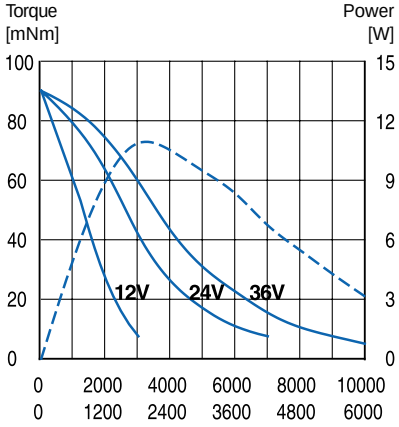

Executions available from stock :

- 01 see drawing
- 01 for gearbox RG1/9

The PP520 motor is also available with the K40 gearbox.

Particular versions include options such as special shafts (hollow shaft), other gearboxes and so on.

PP520-258-004
Autocommutation mode
Parameter phase advance
U = 36V

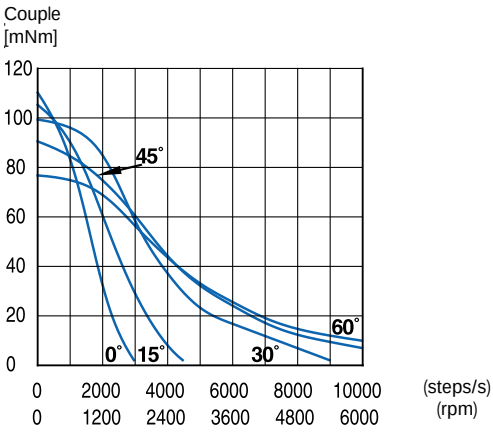

Torque and sensor signals phase shift in electrical degrees
CW operation.

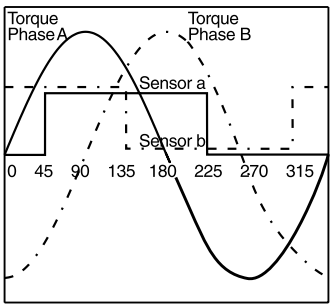

Notes

The speed scale is indicated in full-steps/s for all drive modes. The motor is driven in half-steps unless otherwise specified.

The motor is energised with nominal current unless otherwise specified.

With the integrated Hall sensors, the PP520 motor can operate as a stepper motor with confirmation of step execution. With an adequate drive circuit it can also position, with the automatic commutation assuring full torque usage.

The following drive circuits are recommended with the PP520 motor, depending on the drive mode and the dynamic performance required: ESD-1200/1300, DM224-i.

The DEM 31 and DEM 32 circuits allow to demonstrate the use of the PP520 motor in brushless DC mode.

Pull-in range
Pull-out range
Power output

Pull-in is measured with a load inertia equal to the rotor inertia.

Availability: see enclosed document at the end of the catalogue

© Portescap

Specifications subject to change without prior notice

Turbo Disc™ P530

Stepper motor

Suitable for microstep operation

100 steps/revolution
3.6° step angle

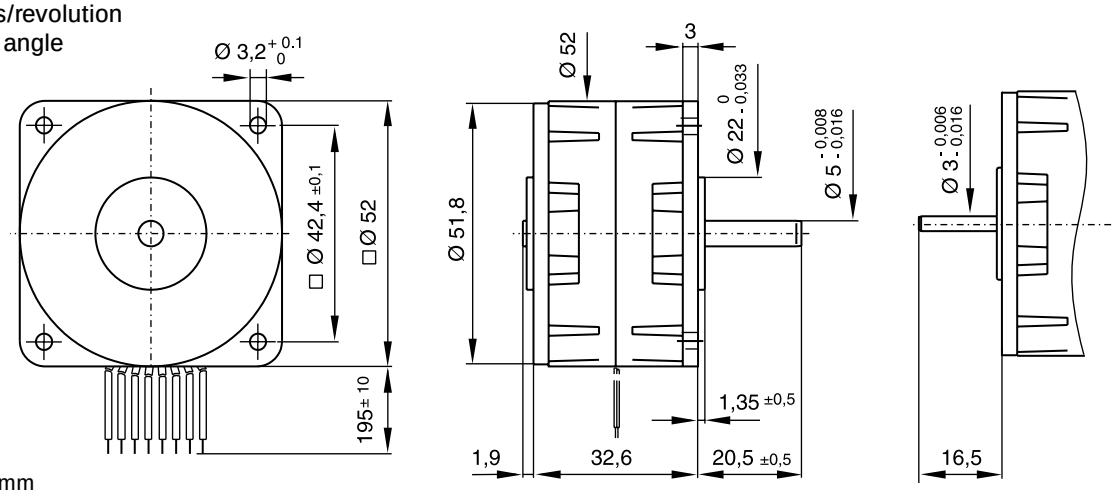

scale: 2/3
dimensions in mm
mass: 250 g
lead wires: 195 ± 10 mm
0.25 mm² (AWG 24)

P530-258 - •••• • 10

P530-258 - •••• • 84

Windings available	••••	012	004	004	0.7
		coils in series	coils in series	coils in parallel	coils in parallel
Coil dependent parameters		typ	typ	typ	typ
1 Phase resistance	ohm	27	8.8	2.2	0.35
2 Phase inductance (1 kHz)	mH	64	20	5	0.7
3 Nominal phase current (2 ph. on)	A	0.4	0.7	1.4	3.7
4 Nominal phase current (1 ph. on)	A	0.56	1	2	5.2
5 Back-EMF amplitude	V/kst/s	20	11	5.5	2.1

Coil independent parameters [1]		min	typ	max
Torque parameters				
6 Holding torque (nominal current)	mNm (oz-in)	155 (22.1)	175 (25)	200 (28.5)
7 Holding torque (2 x nominal current) [2]	mNm (oz-in)	255 (36.1)	300 (42.5)	345 (48.8)
8 Detent torque amplitude and friction	mNm (oz-in)	2 (0.3)	10 (1.4)	18 (2.5)
Thermal parameters				
9 Thermal resistance coil-ambient [3]	°C/W		7.3	
Angular accuracy				
10 Absolute accuracy (2 ph. on full-step mode/microstep)	% full-steps		±3/±6	±5/±8
Mechanical parameters				
11 Rotor inertia	kgm².10⁻⁷		12	
Other parameters				
12 Natural resonance frequency (nominal current)	Hz		300	
13 Electrical time constant	ms		2.3	
14 Angular acceleration (nominal current)	rad/s²		141 000	

- Max. rated coil temperature: 130°C
- Recom. ambient temperature range: -20°C to +50°C
- Radial shaft play (5N): 25 µm
  Axial shaft play (5N): 25 µm
- Max. radial load[4]: 20N
  Max. axial load[5]: 30N
- Test voltage (1 min): 500 V_{RMS}
- "Power rate" (nominal current): 24 kW/s

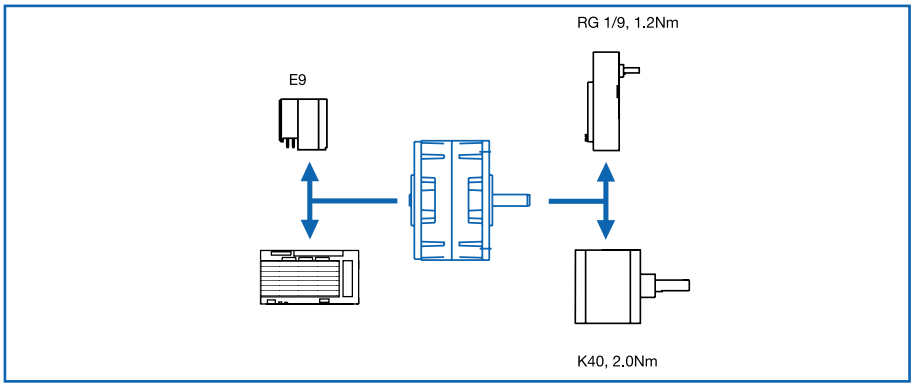

[1] Bipolar driver.
[2] The maximum coil temperature must be respected.
[3] Motor unmounted.
[4] Load applied at 12 mm from mounting face.
[5] Shaft must be supported for press-fitting a pulley or pinion.

© Portescap

Specifications subject to change without prior notice

Turbo Disc™ P530

Suitable for microstep operation

P530-258-012
Coils in series
escap® EDM-453
I = 0.56A

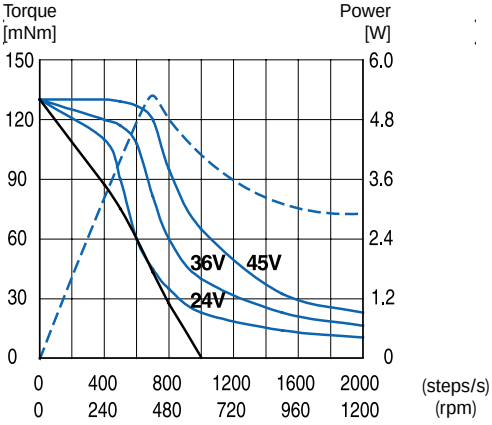

P530-258-004
Coils in series
escap® EDM-453 or DM224-i
I = 1A

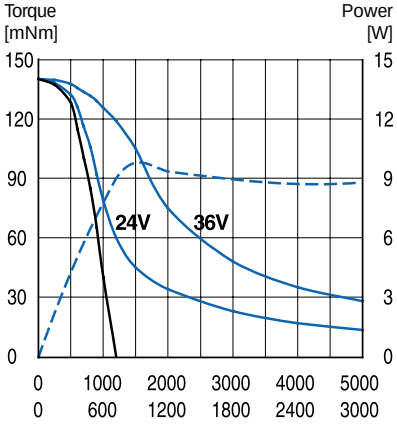

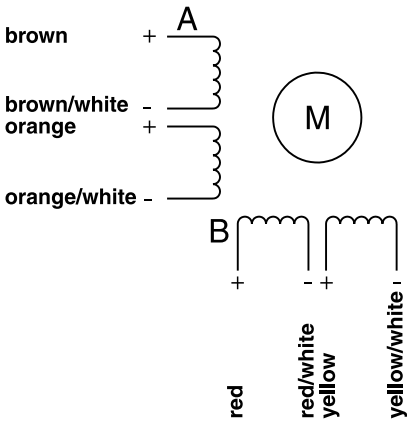

Motor connections

P530-258-004
Coils in parallel
escap® EDM-453 or DM224-i
I = 2A

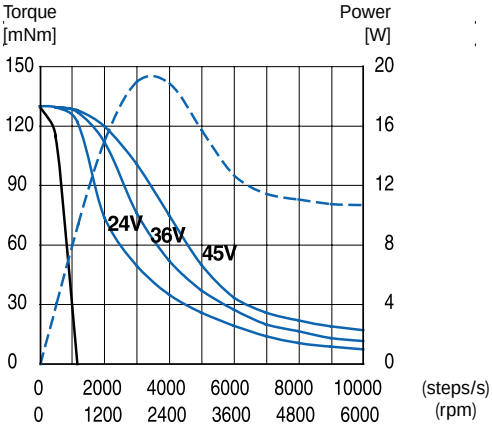

P530-258-0.7
Coils in parallel
escap® EDM-907,
I = 5.2A, U = 25V

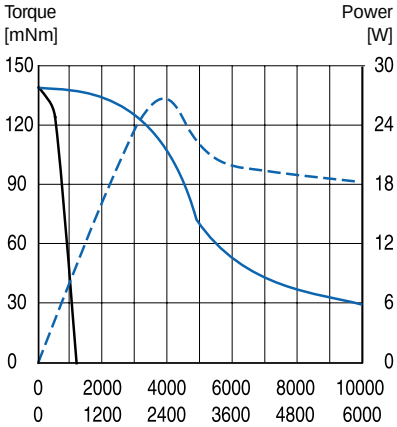

Executions available from stock :

- 10 see drawing
- 84 see drawing
- 84 with E9
- 10 or • 84 with RG1/9

The P530 motor is also available with the K40 gearbox.

Particular versions include options such as special shafts (hollow shaft), optical encoders and so forth.

P530-258-0.7
Coils in parallel
escap® EDM-907,
I = 5.2A, U = 50V

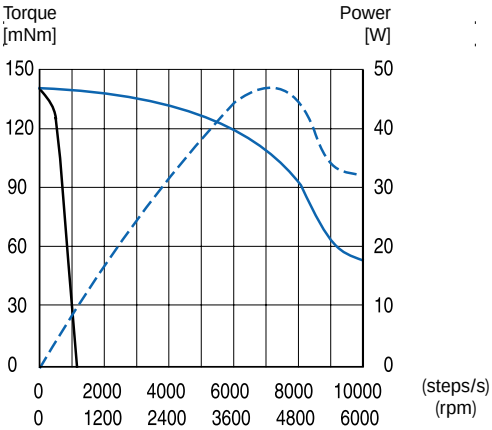

P530-258-0.7
Coils in parallel
escap® EDM-907,
I =5.2A, U = 75V

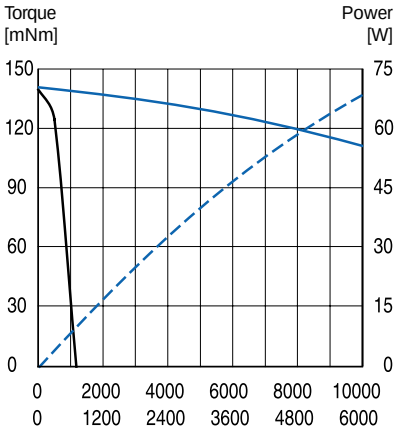

Notes

This motor is designed for microstep operation, it features :

- sinusoidal torque function
- detent torque is very small compared to holding torque
- no magnetic coupling between phases
- excellent linearity torque vs current

The speed scale is indicated in full-steps/s for all drive modes.

The motor is driven in half-steps unless otherwise specified.

The motor is energised with nominal current unless otherwise specified.

The following drive circuits are recommended with the P530 motor, depending on the drive mode and the dynamic performance required: EDM-453, EDM-907.

Availability: see enclosed document at the end of the catalogue

Pull-in range
Pull-out range
Power output

Pull-in is measured with a load inertia equal to the rotor inertia.

© Portescap

Specifications subject to change without prior notice

100 steps/revolution
3.6° step angle

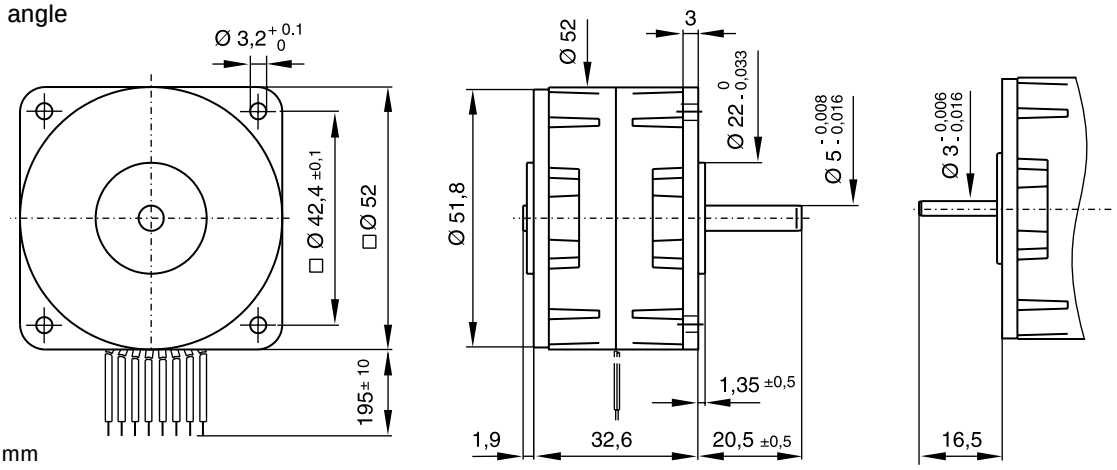

scale: 2/3
dimensions in mm
mass: 250 g
lead wires: 195 ± 10 mm
0.25 mm² (AWG 24)

P532-258 - •••• • 10

P532-258 - •••• • 84

Windings available	••••	012	004	004	0.7
		coils in series	coils in series	coils in parallel	coils in parallel
Coil dependent parameters		typ	typ	typ	typ
1 Phase resistance	ohm	27	8.8	2.2	0.35
2 Phase inductance (1 kHz)	mH	64	20	5	0.7
3 Nominal phase current (2 ph. on)	A	0.4	0.7	1.4	3.7
4 Nominal phase current (1 ph. on)	A	0.56	1	2	5.2
5 Back-EMF amplitude	V/kst/s	21	12	6	2.3

Coil independent parameters [1]				
Torque parameters		min	typ	max
6 Holding torque (nominal current)	mNm (oz-in)	174 (24.6)	205 (29)	236 (33.4)
7 Holding torque (2 x nominal current) [2]	mNm (oz-in)	306 (43.3)	360 (51)	414 (58.6)
8 Detent torque amplitude and friction	mNm (oz-in)	14 (2)	28 (4)	40 (5.7)
Thermal parameters				
9 Thermal resistance coil-ambient [3]	°C/W		7.3	
Angular accuracy				
10 Absolute accuracy (2 ph. on full-step mode)	% full-steps		±3	±5
Mechanical parameters				
11 Rotor inertia	$kgm^2.10^{-7}$		12	
Other parameters				
12 Natural resonance frequency (nominal current)	Hz		330	
13 Electrical time constant	ms		2.3	
14 Angular acceleration (nominal current)	rad/s^2		171 000	

- Max. rated coil temperature: 130°C
- Recom. ambient temperature range: -20°C to +50°C
- Radial shaft play (5N): 25 µm
  Axial shaft play (5N): 25 µm
- Max. radial load[4]: 20N
  Max. axial load[5]: 30N
- Test voltage (1 min): 500 V_{RMS}
- "Power rate" (nominal current): 35 kW/s

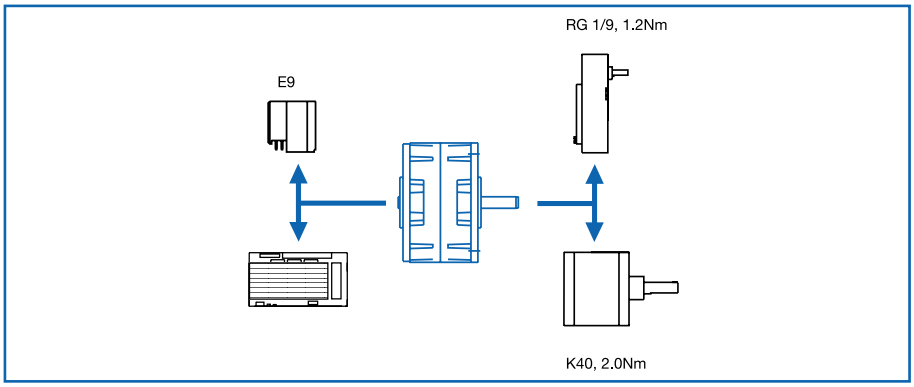

[1] Bipolar driver.
[2] The maximum coil temperature must be respected.
[3] Motor unmounted.
[4] Load applied at 12 mm from mounting face.
[5] Shaft must be supported for press-fitting a pulley or pinion.

© Portescap

Specifications subject to change without prior notice

P532-258-004
Coils in series
L/R driver
33Ω series resistor, 24V

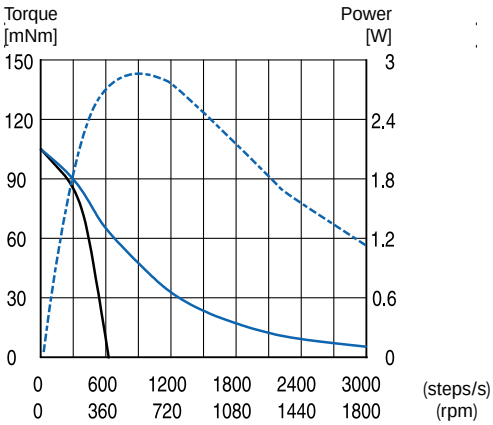

P532-258-012
Coils in series
L/R driver
39Ω series resistor, 36V

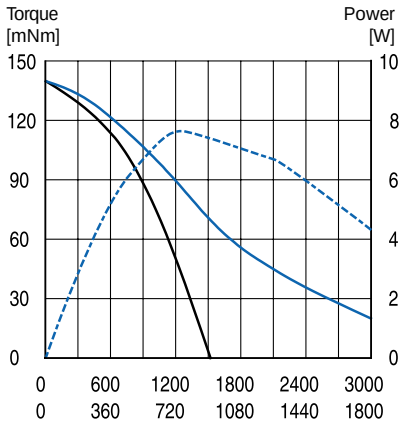

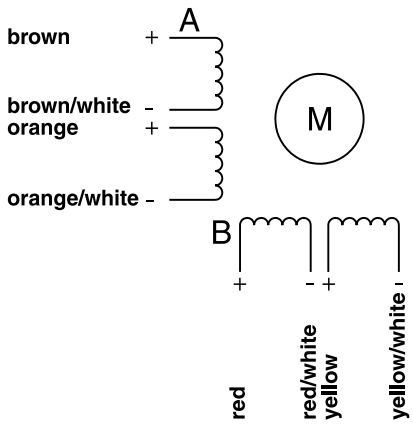

Motor connections

P532-258-004
Coils in parallel
escap® EDM-453,
34V, 2A

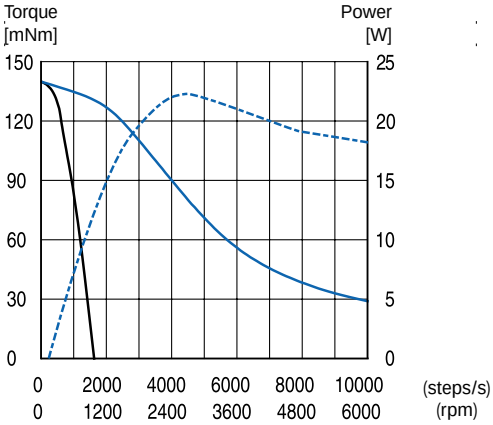

P532-258-004
Coils in parallel
escap® ESD-1200,
I = 2A

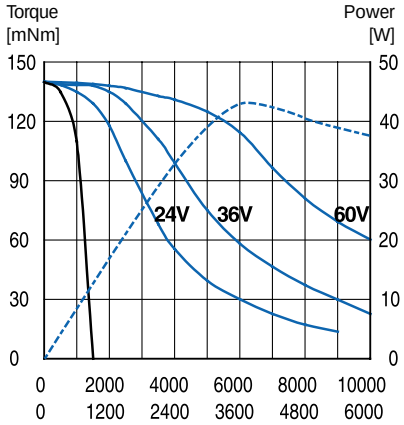

Executions available from stock :

- 10 see drawing
- 84 see drawing
- 84 with E9
- 10 or • 84 with RG1/9

The P532 motor is also available with the K40 gearbox.

Particular versions include options such as special shafts (hollow shaft), other gearboxes (R32, R40), optical encoders and so forth.

P532-258-0.7
Coils in series
escap® ESD-1300,
I = 2.4A

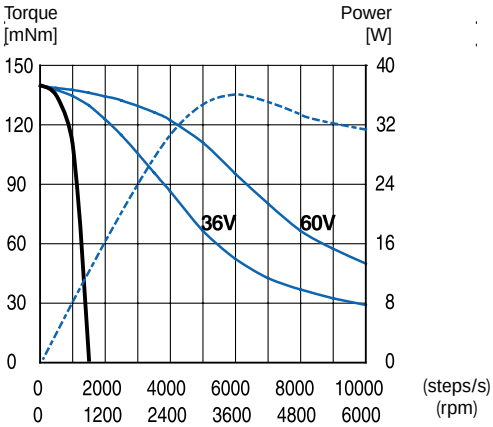

P532-258-0.7
Coils in series
escap® ESD-1300,
I =3A

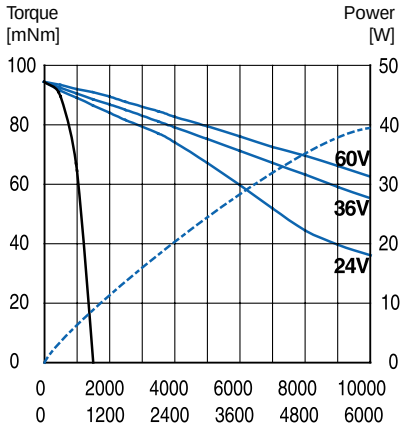

Notes

The low inertia, extended pull-in range, high peak speed and boost torque capability of this motor are benefits for fast incremental motion.

The speed scale is indicated in full-steps/s for all drive modes.

The motor is driven in half-steps unless otherwise specified.

The motor is energised with nominal current unless otherwise specified.

The following escap® drive circuits are recommended with the P532 motor, depending on the drive mode and the dynamic performance required: EDM-453, ESD-1200, ESD-1300.

Pull-in range
Pull-out range
Power output

Pull-in is measured with a load inertia equal to the rotor inertia.

Availability: see enclosed document at the end of the catalogue

© Portescap

Specifications subject to change without prior notice

Turbo Disc™ P630

Stepper motor

Suitable for microstep operation

100 steps/revolution
3.6° step angle

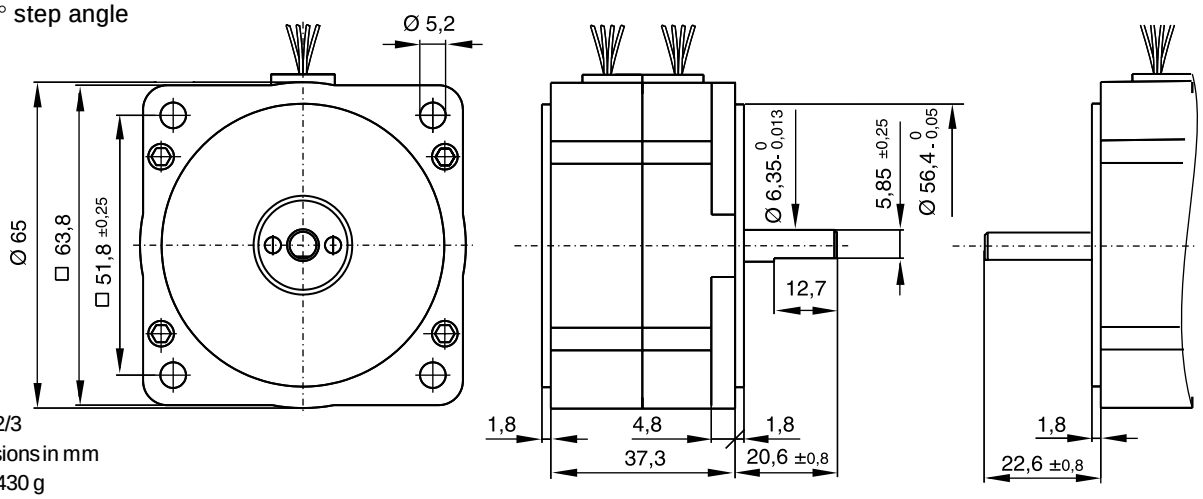

scale: 2/3
dimensions in mm
mass: 430 g
lead wires: 380 ± 15 mm
0.35 mm² (AWG 22) protection class IP 54

P630-258 - •••• • 04

P630-258 - •••• • 00

Windings available	••••	C	C	B	B
		coils in series	coils in parallel	coils in series	coils in parallel
Coil dependent parameters		typ	typ	typ	typ
1 Phase resistance	ohm	2.5	0.63	1.55	0.39
2 Phase inductance (1 kHz)	mH	4.8	1.2	2.7	0.68
3 Nominal phase current (2 ph. on)	A	1.4	2.8	1.8	3.6
Nominal phase current (1 ph. on)	A	1.9	3.8	2.5	5
5 Back-EMF amplitude	V/kst/s	9.6	4.8	7.6	3.8

Coil independent parameters [1]				
Torque parameters		min	typ	max
6 Holding torque (nominal current)	mNm (oz-in)	270 (38.2)	300 (42.5)	330 (46.7)
7 Holding torque (2 x nominal current) [2]	mNm (oz-in)	430 (60.9)	530 (75)	640 (90.6)
8 Detent torque amplitude and friction	mNm (oz-in)		20 (2.8)	24 (3.4)
Thermal parameters				
9 Thermal resistance coil-ambient [3]	°C/W		3.8	
Angular accuracy				
10 Absolute (2 ph. on full-step mode/microstep)	% full-steps		±3/±5	±5/±7
Mechanical parameters				
11 Rotor inertia	$kgm^2.10^{-7}$		39	
Other parameters				
12 Natural resonance frequency (nominal current)	Hz		220	
13 Electrical time constant	ms		2	
14 Angular acceleration (nominal current)	rad/s^2		77 000	

- Max. rated coil temperature: 155°C
- Recom. ambient temperature range: -20°C to +50°C
- Radial shaft play (20N): 25 µm
  Axial shaft play (30N): 25 µm
- Max. radial load[4]: 20N
  Max. axial load[5]: 30N
- Test voltage (1 min): 500 V_{RMS}
- "Power rate" (nominal current): 23 kW/s

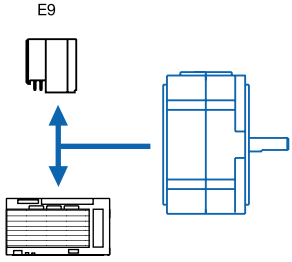

[1] Bipolar driver.
[2] The maximum coil temperature must be respected.
[3] Motor mounted to an aluminium plate 10 x 20 x 1.3 cm.
[4] Load applied at 12 mm from mounting face.
[5] Shaft must be supported for press-fitting a pulley or pinion.

© Portescap

Specifications subject to change without prior notice

Turbo Disc™ P630

Suitable for microstep operation

P630-258-C
Coils in series
escap® EDM-453
I = 1.9A

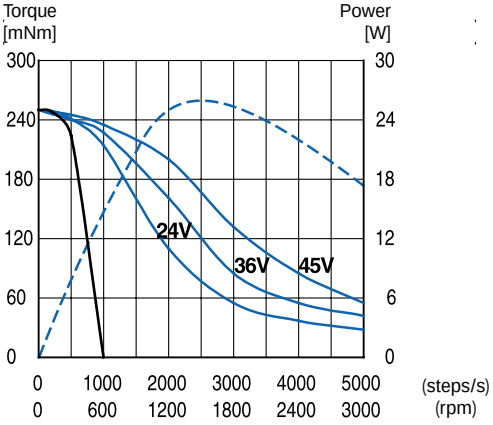

P630-258-C
Coils in parallel
escap® EDM-907
I = 3.8A, U = 50V

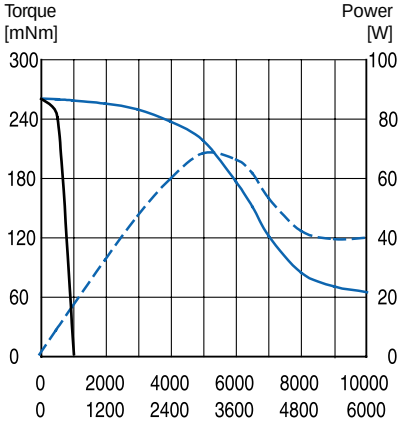

P630-258-C
Coils in parallel
escap®EDM-907,
I = 3.8A, U = 70V

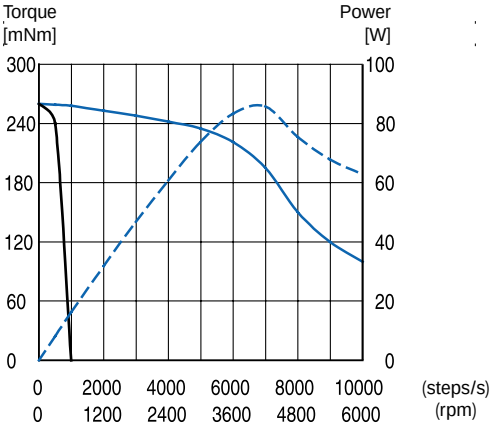

P630-258-B
Coils in parallel
escap® EDM-907,
I = 5A, U = 25V

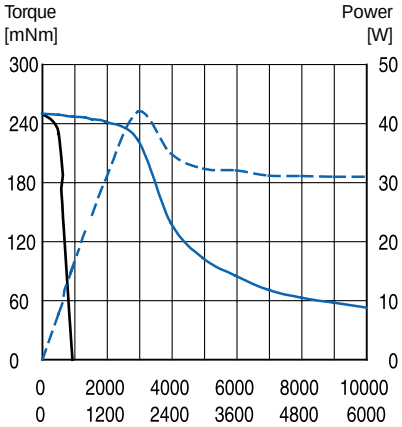

P630-258-B
Coils in parallel
escap® EDM-907,
I = 5A, U = 50V

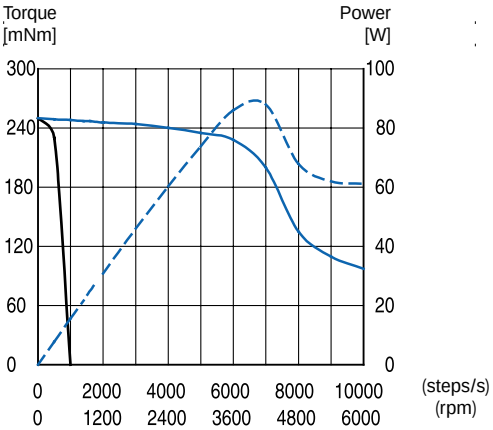

P630-258-B
Coils in parallel
escap® EDM-907,
I = 5A, U = 70V

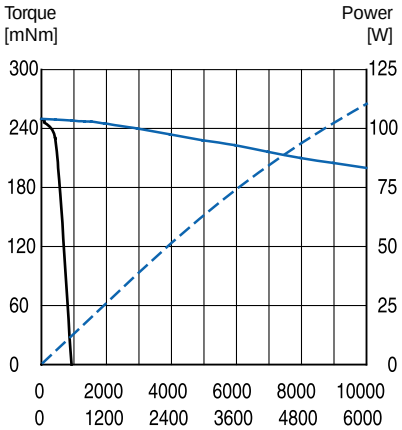

Pull-in range
Pull-out range
Power output

Pull-in is measured with a load inertia equal to the rotor inertia.

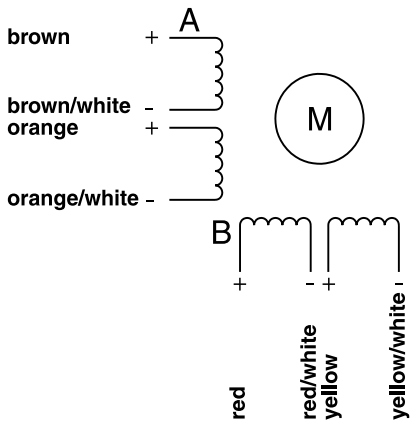

Motor connections

Executions available from stock :

None, but the executions • 00 and • 04 (see drawing) or the • 04 with E9 encoder are fasten to deliver

Notes

This motor is designed for microstep operation, it features :

- sinusoidal torque function
- detent torque is very small compared to holding torque
- no magnetic coupling between phases
- excellent linearity current vs torque

The speed scale is indicated in full-steps/s for all drive modes.

The motor is driven in half-steps unless otherwise specified.

The motor is energised with nominal current unless otherwise specified.

The following drive circuits are recommended with the P630 motor, depending on the drive mode and the dynamic performance required: EDM-453, EDM-907, Dm224i.

Availability: see enclosed document at the end of the catalogue

© Portescap

Specifications subject to change without prior notice

100 steps/revolution
3.6° step angle

lead wires : 380 ± 15 mm 0.35 mm² (AWG 24)

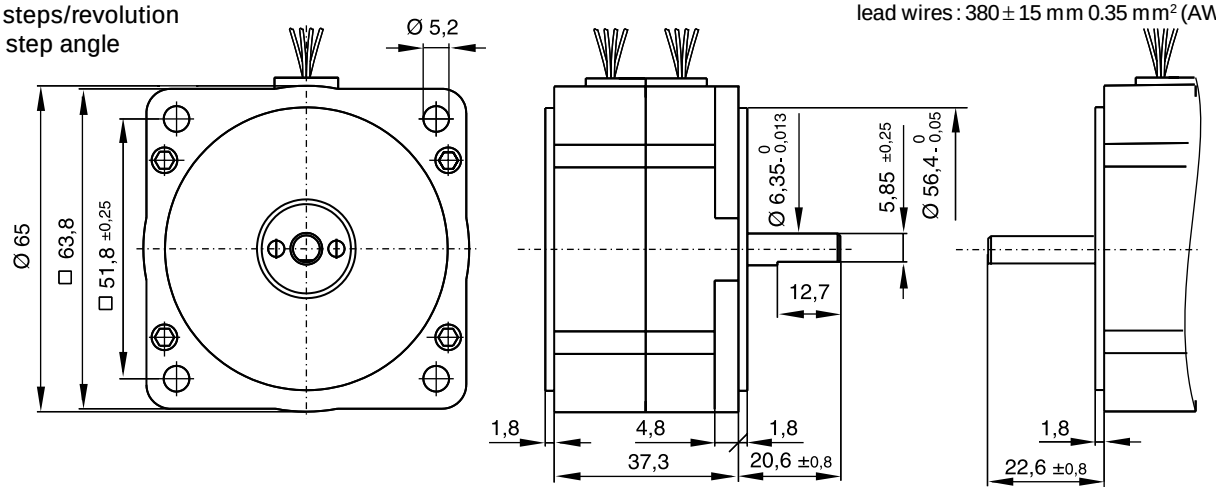

scale: 2/3
dimensions in mm
mass: 430 g

P632-258 - •••• • 04 P632-258 - •••• • 00

Windings available	••••	C	C	B	B
		coils in series	coils in parallel	coils in series	coils in parallel
Coil dependent parameters		typ	typ	typ	typ
1 Phase resistance	ohm	2.5	0.63	1.55	0.39
2 Phase inductance (1 kHz)	mH	4.8	1.2	2.7	0.68
3 Nominal phase current (2 ph. on)	A	1.4	2.8	1.8	3.6
4 Nominal phase current (1 ph. on)	A	1.9	3.8	2.5	5
5 Back-EMF amplitude	V/kst/s	10.6	5.3	8	4

Coil independent parameters [1]		min	typ	max
Torque parameters				
6 Holding torque (nominal current)	mNm (oz-in)	290 (41.1)	320 (45.3)	350 (49.5)
7 Holding torque (1.5 x nominal current) [2]	mNm (oz-in)	510 (72.2)	600 (84.9)	690 (97.7)
8 Detent torque amplitude and friction	mNm (oz-in)		35 (4.9)	50 (7.1)
Thermal parameters				
9 Thermal resistance coil-ambient [3]	°C/W	3.8		
Angular accuracy				
10 Absolute accuracy (2 ph. on full-step mode)	% full-steps		±3	±5
Mechanical parameters				
11 Rotor inertia	$kgm^2.10^{-7}$		39	
Other parameters				
12 Natural resonance frequency (nominal current)	Hz		230	
13 Electrical time constant	ms		2	
14 Angular acceleration (nominal current)	rad/s^2		82 000	

- Max. rated coil temperature: 155°C
- Recom. ambient temperature range: -20°C to +50°C
- Radial shaft play (20N): 25 µm
  Axial shaft play (30N): 25 µm
- Max. radial load[4]: 20N
  Max. axial load[5]: 30N
- Test voltage (1 min): 500 V_{RMS}
- "Power rate" (nominal current): 26 kW/s

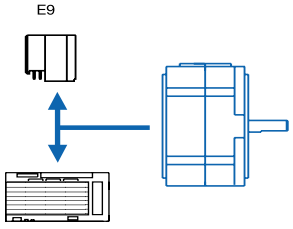

[1] Bipolar driver.
[2] The maximum coil temperature must be respected.
[3] Motor mounted to an aluminium plate 10 x 20 x 1.3 cm
[4] Load applied at 12 mm from mounting face.
[5] Shaft must be supported for press-fitting a pulley or pinion.

© Portescap

Specifications subject to change without prior notice

P632-258-B
Coils in series
escap® ESD-1300

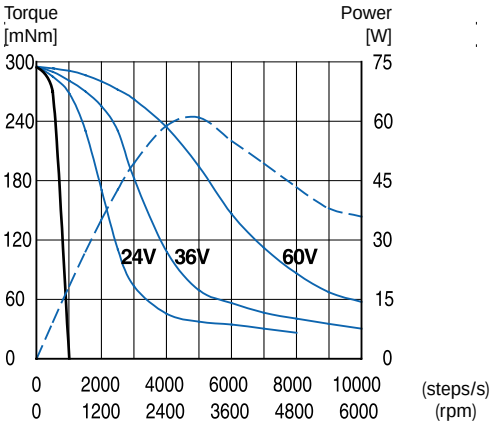

P632-258-C
Coils in parallel
escap® EDB-909
I = 3.8A, U = 50V

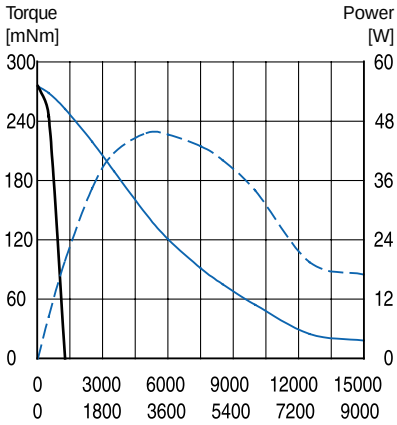

P632-258-B
Coils in parallel
escap® EDB-909,
I = 5A, U = 50V

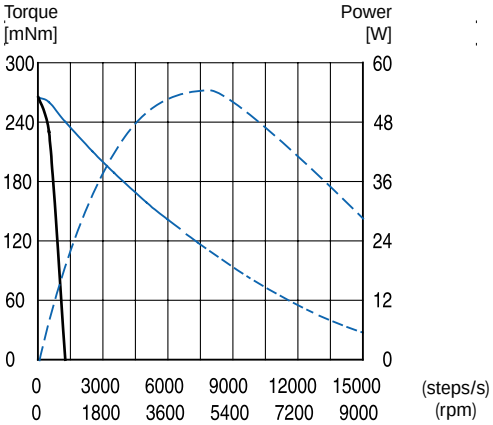

P632-508-C
Coils in parallel
escap® EDB-909,
I = 3.8A, U = 70V

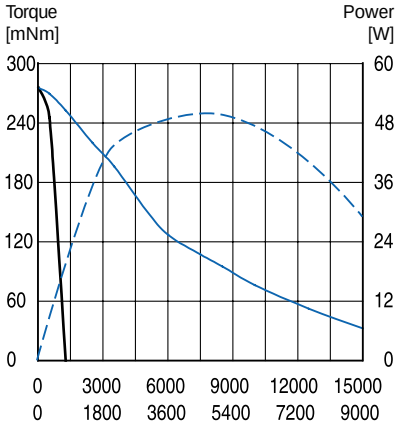

P632-258-B
Coils in parallel
escap® EDB-909,
I = 5A, U = 70V

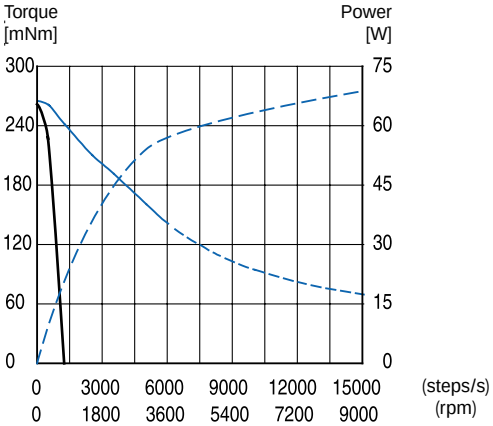

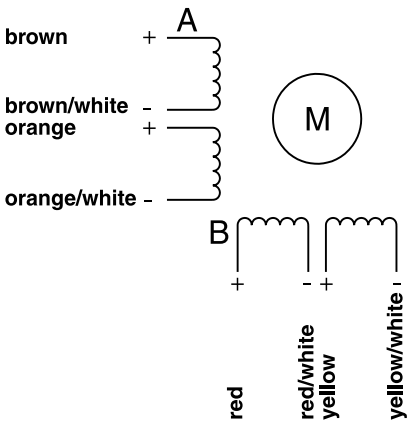

Motor connections

Executions available from stock :

- 04 see drawing
- 04 & E9

Particular versions include options such as double shaft • 00, special shafts and so forth.

Notes

The low inertia, extended pull-in range, high peak speed and boost torque capability of this motor are benefits for fast incremental motion.

The speed scale is indicated in full-steps/s for all drive modes.

The motor is driven in half-steps unless otherwise specified.

The motor is energised with nominal current unless otherwise specified.

The following escap® drive circuits are recommended with the P632 motor, depending on the drive mode and the dynamic performance required: ESD-1300, EDB-909.

Pull-in range
Pull-out range
Power output

Pull-in is measured with a load inertia equal to the rotor inertia.

Availability: see enclosed document at the end of the catalogue

© Portescap

Specifications subject to change without prior notice

Turbo Disc™ P850

Stepper motor

Suitable for microstep operation

200 steps/revolution
1.8° step angle

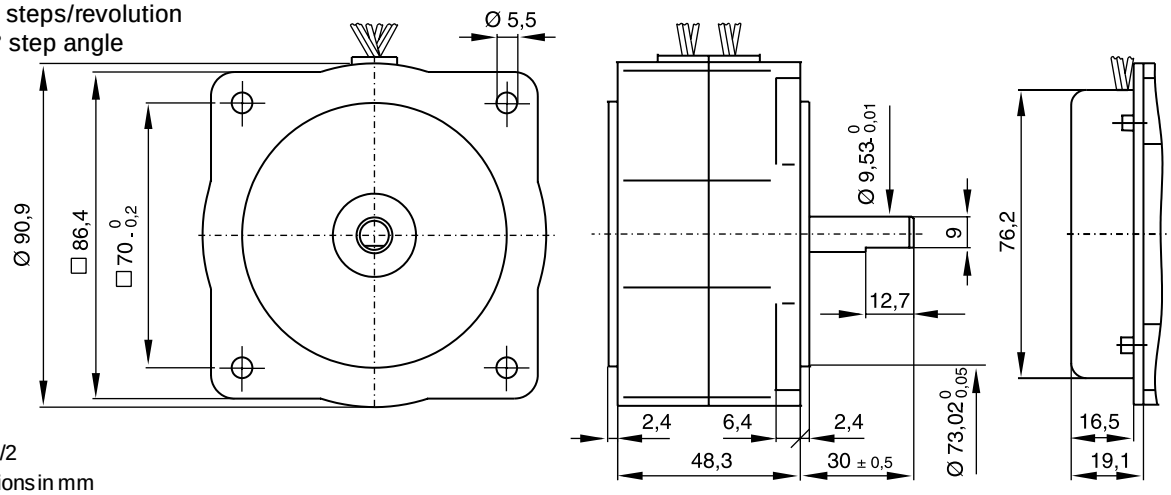

scale: 1/2
dimensions in mm
mass: 1 kg
lead wires: 380 ± 15 mm
0.35 mm² (AWG 22) protection class IP 54

P850-508 - •••• • 11

P850-508 - •••• • 006 V

Windings available	••••	C	C	B	B
		coils in series	coils in parallel	coils in series	coils in parallel
Coil dependent parameters		typ	typ	typ	typ
1 Phase resistance	ohm	2.6	0.65	1.6	0.4
2 Phase inductance (1 kHz)	mH	6.4	1.6	4	1
3 Nominal phase current (2 ph. on)	A	1.8	3.6	2.3	4.6
4 Nominal phase current (1 ph. on)	A	2.5	5	3.2	6.4
5 Back-EMF amplitude	V/kst/s	9.6	4.8	7.6	3.8

Coil independent parameters [1]				
Torque parameters		min	typ	max
6 Holding torque (nominal current)	mNm (oz-in)	670 (94.9)	780 (110.4)	880 (124.6)
7 Holding torque (2 x nominal current) [2]	mNm (oz-in)	1130 (160)	1340 (189.7)	1550 (219.5)
8 Detent torque amplitude and friction	mNm (oz-in)	3.5 (0.5)	28 (3.9)	43 (6.1)
Thermal parameters				
9 Thermal resistance coil-ambient [3]	°C/W		2.6	
Angular accuracy				
10 Absolute (2 ph. on full-step mode/microstep)	% full-steps		±3/±6	±5/±8
Mechanical parameters				
11 Rotor inertia $kgm^2.10^{-7}$			150	
Other parameters				
12 Natural resonance frequency (nominal current)	Hz		260	
13 Electrical time constant ms			3.1	
14 Angular acceleration (nominal current)	rad/s^2		52000	
Velocity sensors [6]				
15 EMF amplitude	V/kst/s		5.5	
16 Coil resistances	ohm		80	
17 Coil inductance	mH		50	

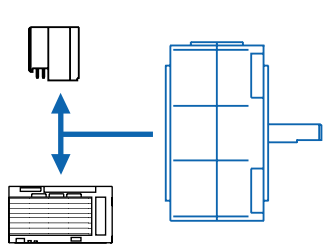

- Max. rated coil temperature: 155°C
- Recom. ambient temperature range: -20°C to +50°C
- Radial shaft play (20N): 25 µm
  Axial shaft play (30N): 25 µm
- Max. radial load[4]: 44N
  Max. axial load[5]: 66N
- Test voltage (1 min): 500 V_{RMS}
- "Power rate" (nominal current): 86 kW/s

[1] Bipolar driver
[2] The maximum coil temperature must be respected
[3] Motor mounted to an aluminium plate 20 x 20 x 1.3 cm
[4] Load applied at 12 mm from mounting face
[5] Shaft must be supported for press-fitting a pulley or pinion
[6] Delivering two sinusoidal signals in quadrature (standard option).

© Portescap

Specifications subject to change without prior notice

P850-508-C
Coils in series
escap® EDM-453
I = 2.5A

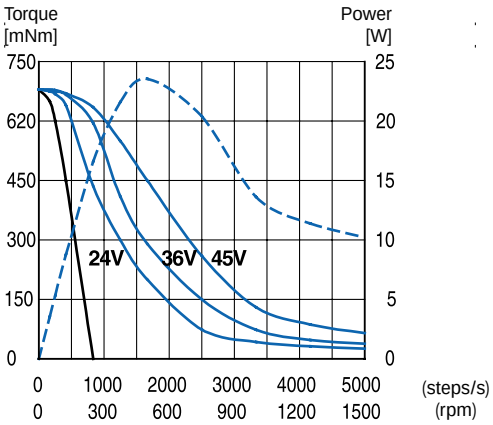

P850-508-C
Coils in parallel
escap® EDM-907
I = 5A, U = 50V

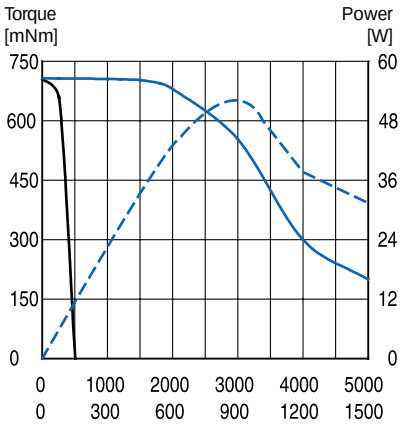

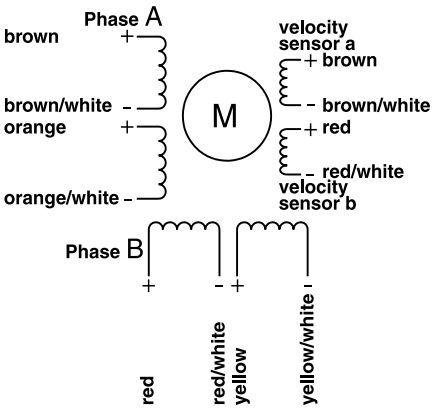

Motor connections

P850-508-B
Coils in parallel
escap® EDM-907,
I = 6.4A, U = 50V

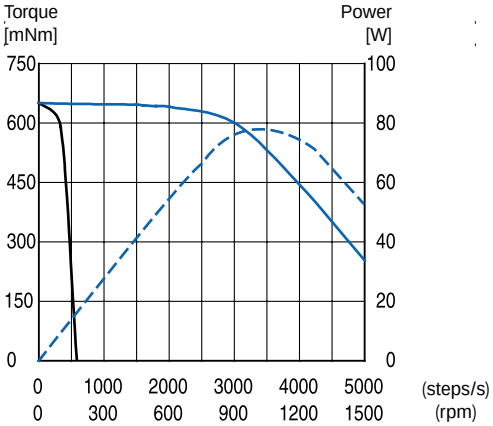

P850-508-C
Coils in parallel
escap® EDM-907,
I = 5A, U = 70V

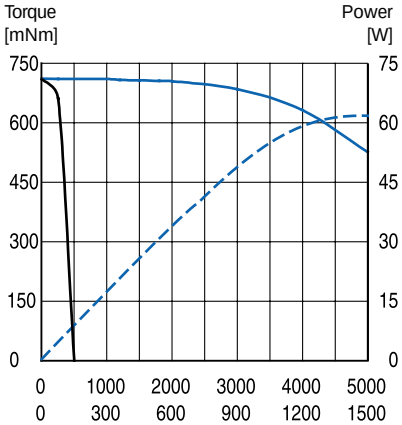

Executions available from stock :

P850-508-C • 11 see drawing

This motor is also available with the coil B • 11 and encoder E9 or with speed sensors • 006 V

Particular versions include options such as special shafts (hollow shaft) and so forth.

P850-508-B
Coils in parallel
escap® EDM-907,
I = 6.4A, U = 70V

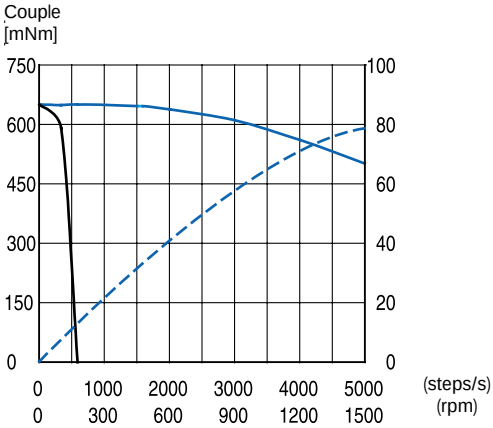

Notes
This motor is designed for microstep operation, it features :
- sinusoidal torque function
- detent torque is very small compared to holding torque
- no magnetic coupling between phases
- excellent linearity current vs torque

The speed scale is indicated in full-steps/s for all drive modes. The motor is driven in half-steps unless otherwise specified.
The motor is energised with nominal current unless otherwise specified.
Use of the velocity sensors and adequate drive circuitry allow for damping of the end-of-step ringing. Total move time is thus reduced when positioning a load having low friction content.
The following escap® drive circuits are recommended with the P850 motor, depending on the drive mode and the dynamic performance required : EDM-453, EDM-907.

Pull-in range
Pull-out range
Power output

Pull-in is measured with a load inertia equal to the rotor inertia.

Availability: see enclosed document at the end of the catalogue

© Portescap

Specifications subject to change without prior notice

200 steps/revolution
1.8° step angle

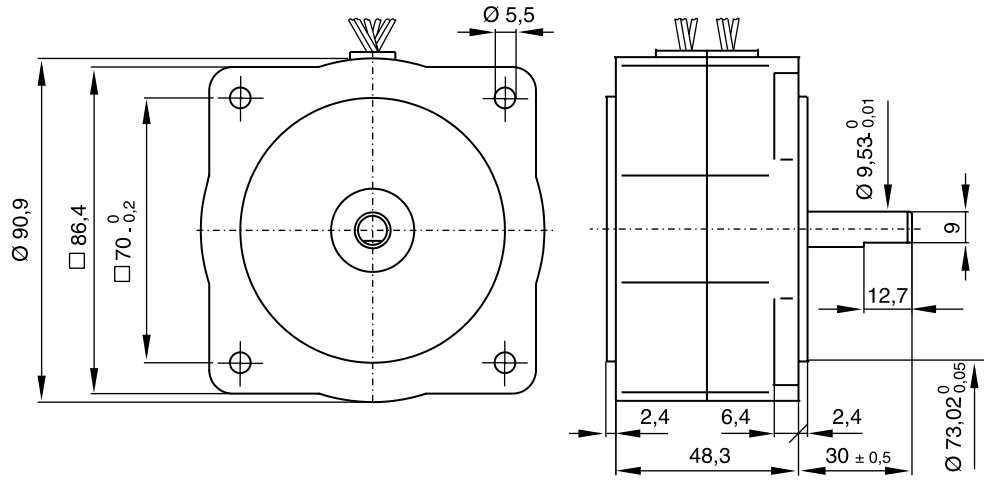

scale: 1/2
dimensions in mm
mass: 1 kg
lead wires: 380 ± 15 mm
0.35 mm² (AWG 22) protection class IP 54

P852-508 - •••• • 11

Windings available	••••	C	C	B	B
		coils in series	coils in parallel	coils in series	coils in parallel
Coil dependent parameters		typ	typ	typ	typ
1 Phase resistance	ohm	1.7	0.43	0.97	0.24
2 Phase inductance (1 kHz)	mH	5	1.25	3.2	0.8
3 Nominal phase current (2 ph. on)	A	1.8	3.6	2.3	4.6
4 Nominal phase current (1 ph. on)	A	2.5	5	3.2	6.4
5 Back-EMF amplitude	V/kst/s	13.3	6.7	10.4	5.1

Coil independent parameters [1]

Torque parameters		min	typ	max
6 Holding torque (nominal current)	mNm (oz-in)	900 (127)	1060 (150)	1220 (173)
7 Holding torque (2 x nominal current) [2]	mNm (oz-in)	1600 (226)	1880 (266)	2160 (306)
8 Detent torque amplitude and friction	mNm (oz-in)		110 (15.6)	130 (18.4)
Thermal parameters				
9 Thermal resistance coil-ambient [3]	°C/W		2.6	
Angular accuracy				
10 Absolute accuracy (2 ph. on full-step mode)	% full-steps		±3	±5
Mechanical parameters				
11 Rotor inertia	$kgm^2.10^{-7}$		130	
Other parameters				
12 Natural resonance frequency (nominal current)	Hz		320	
13 Electrical time constant	ms		3.1	
14 Angular acceleration (nominal current)	rad/s^2		81 000	

- Max. rated coil temperature: 155°C
- Recom. ambient temperature range: -20°C to +50°C
- Radial shaft play (44N): 25 µm
  Axial shaft play (66N): 25 µm
- Max. radial load[4]: 44N
  Max. axial load[5]: 66N
- Test voltage (1 min): 500 V_{RMS}
- "Power rate" (nominal current): 86 kW/s

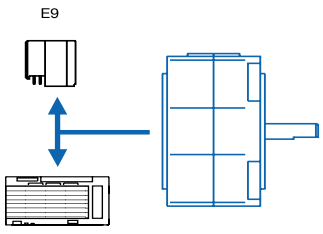

[1] Bipolar driver.
[2] The maximum coil temperature must be respected.
[3] Motor mounted to an aluminium plate 20 x 20 x 1.3 cm.
[4] Load applied at 12 mm from mounting face.
[5] Shaft must be supported for press-fitting a pulley or pinion.

© Portescap

Specifications subject to change without prior notice

P852-508-C
Coils in series
escap® ESD-1300

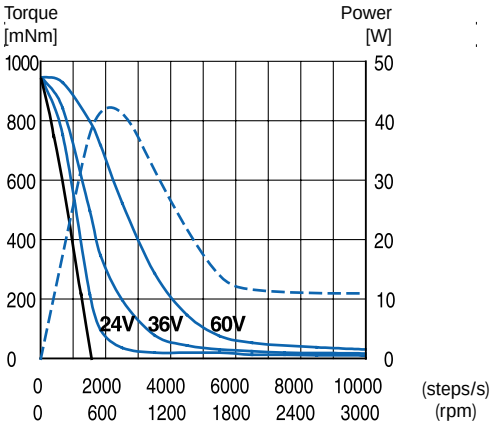

P852-508-C
Coils in parallel
escap® EDB-909,
U = 50V

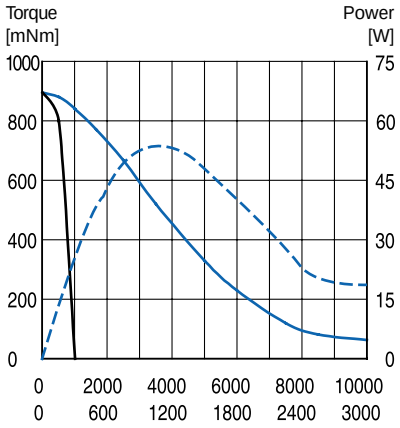

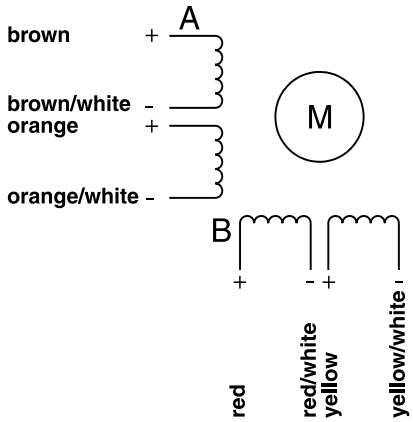

Motor connections

P852-508-C
Coils in parallel
escap® EDB-909,
U = 70V

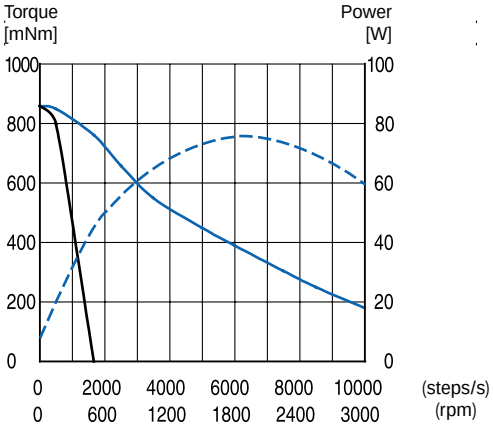

P852-508-B
Coils in parallel
escap® EDB-909,
U = 25V

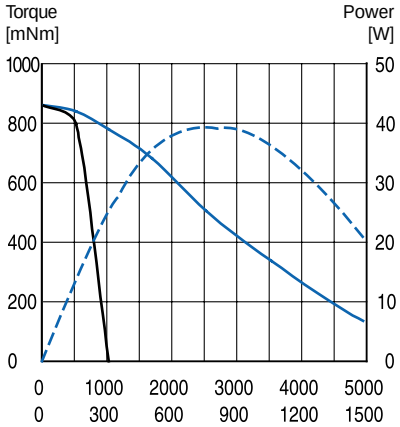

Executions available from stock :

P852-508-B • 11 see drawing
P852-508-B • 11 & E9

This motor is also available with the coil C • 11 or with the coils B or C (exec.• 00) and double shaft

Particular versions include options such as special shafts (hollow shaft) and so forth.

P852-508-B
Coils in parallel
escap® EDB-909,
U = 50V

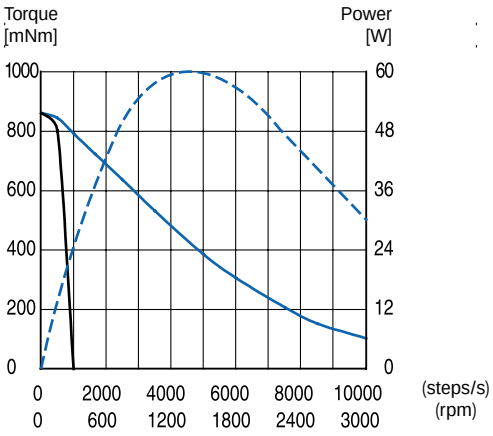

P852-508-B
Coils in parallel
escap® EDB-909,
U = 70V

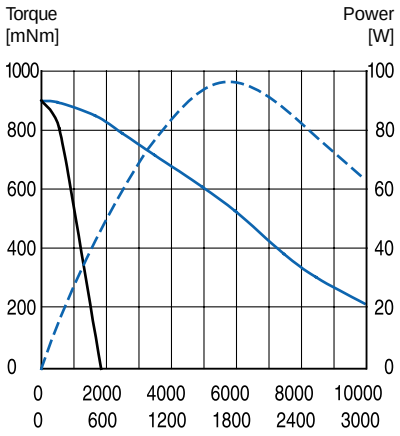

Notes

The low inertia, extended pull-in range, high peak speed and boost torque capability of this motor are benefits for fast incremental motion.

The speed scale is indicated in full-steps/s for all drive modes.

The motor is driven in half-steps unless otherwise specified.

The motor is energised with nominal current unless otherwise specified.

The following escap® drive circuits are recommended with the P852 motor, depending on the drive mode and the dynamic performance required: ESD-1300, EDB-909.

Pull-in range
Pull-out range
Power output

Pull-in is measured with a load inertia equal to the rotor inertia.

Availability: see enclosed document at the end of the catalogue

© Portescap

Specifications subject to change without prior notice

ESD-1200/1300

Bipolar chopper driver 2A or 3A, 60V

Stepper motor drive circuit

- 8 operating current levels adjustable using links or external resistor
- Built-in clock oscillator with ramp
- 30kHz chopping frequency suitable for TurboDisc motors with short electrical time constant
- AC or DC power supply
- Automatic stand by current mode when motor is stationary if required
- Protected against overload & short-circuit (phase to phase and across phase)
- Recommended for the following TurboDisc motors: P310, P430, P520, PP520, P532, PH632, P632, P852

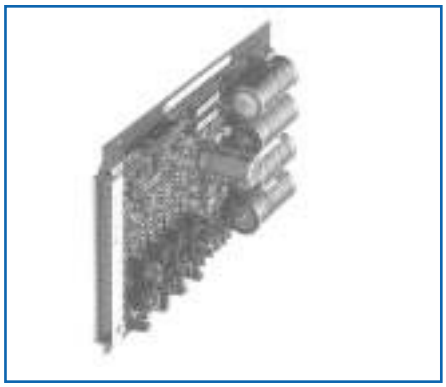

Specifications

1	Power motor supply volt.	AC 18 to 44 V - DC 22 to 60 V
2	Power logic supply volt.	AC 18 V - DC 24 V
3	Auxiliary DC output volt.	U = 24V, I = 300 mA
4	Max phase current	ESD1200: 2A · ESD1300: 3A
5	Logic input	low level: 0...2 V or short circuit · high level: 10...12V or open circuit
6	Logic output (Fault, Zero)	open collector NPN, 30 Vmax, Imax = 15 mA
7	Max. clock frequency	40 kHz in half-step mode, minimum pulse width 10 ms
8	Int. oscillator - slow range	100 Hz to 4 kHz not ramped
	- fast range	2 kHz to 40 kHz ramped (ramp accel. 60 ms - decel. 30 ms)
9	Current level adjustment	with jumper, 8 current levels or with external resist. (pin 32a)
10	Current reduction	stand by function 50% reduction by jumper
11	Temperature	operating 0°C to 50°C · storage -40°C to 85°C
12	Protection	overload · short circuit phase to phase and across phase
13	Fuses	FS1 logic supply 1A
		FS2 motor supply 3.15A (ESD1200), 4A (ESD1300)
14	Size / Connector	160 x 100 x 35 mm / DIN 41612 D32

Connector:

Pin	Row a	Row c
2	Motor Phase B-	Motor Phase B-
4	Motor Phase B+	Motor Phase B+
6	Motor Phase A-	Motor Phase A-
8	Motor Phase A+	Motor Phase A+
10	+24VDC	+24VDC
12	Logic supply 1	Motor Supply 1
14	Logic supply 2	Motor Supply 2
16	0V	0V
18	0V	0V
20	Fast	Fault
22	Slow	Zero Phase
24	Rate Adjust Com.	Slow Rate Adjust
26	Fast Rate Adj.	Direction
28	Internal Clock Out	Clock In
30	Not Connected	Energise
32	External Ref.	Signal 0V

EDB-909

Small size bipolar chopper driver 9A, 70V

Stepper motor drive circuit

- Phase current from 2 A to 9 A adjusted by external resistor
- Chopping frequency 40 kHz
- Single voltage power supply from 22 V to 70 VDC
- Opto-isolated inputs for Direction, Clock, Stand-by, Enable
- Choice of half-step or full-step mode via logic input or by strap
- Stand-by current activated by logic input
- Short-circuit and overtemperature protections
- Recommended for the following TurboDisc motors: P532, PH632, P632, P852

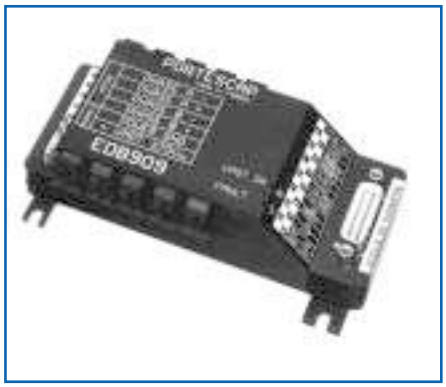

Specifications

1	Power motor supply voltage	22 V to 70 VDC
2	Supply voltage output	5 V / 20 mA
3	Max phase current	2A to 9A
4	Optocoupler inputs :	Clock. Direction. Enable. Stand-by.
	Input current	4 mA to 10 mA
	Input voltage (with no series resistor)	5 V to 8 V
	Input voltage (with series resistor of 1 KΩ)	8 V to 15 V
	Input voltage (with series resistor of 2.2 KΩ)	15 V to 24 V
5	Open drain output :	Fault, VMAX = 35 V, IMAX = 25 mA
6	LED indicator	Green LED (power) - Red LED (fault)
7	Max. clock frequency	20 kHz
8	Protection	Short-circuit between phases, Overvoltage, Thermal
9	Operating temperature	0 to 40°C
10	Connector	SUB-D15 for logic inputs
	(delivered with the driver)	6 poles plug for motor and power supply
11	Size	Module 128 x 70 x 36 mm

Logic connector:

Pin	
1	+5 V out
2	+ Stand by
3	+ Enable
4	+ Clock
5	+CW/CCW
6	Fault
7	H/F
8	GND log
9	- Stand by
10	- Enable
11	- Clock
12	- CW/CCW
13	RS
14	RI
15	RI' RS'

Power connector:

Pin	
1	Phase A-
2	Phase A+
3	Phase B-
4	Phase B+
5	GND
6	VMot

© Portescap

EDM-453

Microstep bipolar chopper driver 3A, 45V

- Single DC supply voltage 12 to 45 V
- Two different current ranges 0-3 A / 0-1,5 A user selectable; 16 levels per range, programmable with front panel commutator
- Choice of 8 various resolutions via front panel commutator or by logic inputs, from full-step to 64 microsteps
- All inputs optoisolated
- Chopper control mode selectable between regenerative and freewheeling
- Recommended for the following TurboDisc motors : P110, P310, P430, P520, PP520, P530, P630, P850

Specifications

1	Power supply voltage	DC 12 V to 45 V
2	Max phase current	1,5 A / 3 A, fuse max 2A slow blow
3	Optocoupler inputs:	
	input 0	0 V or GND
	input 1 (int. series resistor 470 ohms)	+3,5 V...+6 V
	input 2 (int. series resistor 2200 ohms)	+10 V...+30 V
	current	15 mA typ, 20 mA max
4	Boost/stand by current values	nominal ± 33 % (3 A max)
5	Chopper frequency	40 kHz
6	Max. clock frequency	150 kHz
7	LED indicator	Power (green) - Fault (red)
8	Protection	short-circuit between phases, phase and +VDC
9	Temperature	0°C to 50°C
10	Size / Connector	160 x 100 x 26 mm / DIN 41612 D64

Stepper motor drive circuit

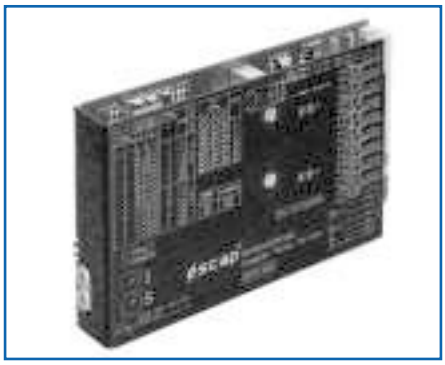

Connector:

Pin	Row A	Row C
1	NC	Home H
2	NC	Home L
3	NC	Enable 0
4	Enable 1	Enable 2
5	Dir. 1	Dir. 2
6	Dir. 0	Clock 0
7	Clock 1	Clock 2
8	St-by 1	St-By
9	St-By 0	Boost 0
10	Boost 1	Boost 2
11	D2 1	D2 2
12	D2 0	D1 0
13	D1 1	D1 2
14	D0 1	D0 2
15	D0 0	Mode 0
16	Mode 1	Mode 2
18	Phase A+	Phase A+
22	Phase A-	Phase A-
24	Phase B+	Phase B+
28	Phase B-	Phase B-
30	0 VDC	0 VDC
32	+ VDC	+ VDC

EDM-907

Microstep bipolar chopper driver 9A, 70V

- Single DC supply voltage 22 to 70 V
- Choice of 8 peak phase current levels from 1,3 A to 9,9 A via front panel commutator or by logic inputs
- Choice of 11 resolutions from full step to 64 microsteps through front panel commutator
- Perfect current regulation especially around zero crossing
- Electronic damping available for motors having velocity sensors
- Opto-isolated inputs for Direction Clock, Boost and Stand by
- Short-circuit and over temperature protections
- Recommended for the following TurboDisc motors : P530, P630, P850

Specifications

1	Power supply voltage	DC 22 V to 70 V (protected with fuse 4 A)
2	Supply voltage output	5 V / 20 mA
3	Phase current (peak value)	1.3 A to 9.9 A
4	Optocoupler inputs :	Clock. Direction. Enable. Stand by.
	input voltage (without series resistor)	5 V to 7 V
	input current	4 mA to 10 mA
5	Logic inputs	I_0, I_1, I_2 (current selection)
	input voltage	5 V to 24 V (TTL compatible)
6	TTL inputs	Energise, $\overline{\text{Damp}}$
	input voltage	5 V
7	Open drain output	Home, Fault, (V_{MAX} = 50 V, I_{MAX} = 25 mA)
8	Max. clock frequency	500 kHz
9	Speed sensor input signal:	
	voltage range	-200 V to + 200 V
	damping gain (factory set)	1.25 A/V
10	LED indicator	Power Home (green), Fault (red), Torque loss (orange)
11	Protection	Short-circuit, Overvoltage, Thermal
12	Operating temperature	0 to 40°C
13	Size/Connector	160 x 100 x 54 mm/Din41612D32

Stepper motor drive circuit

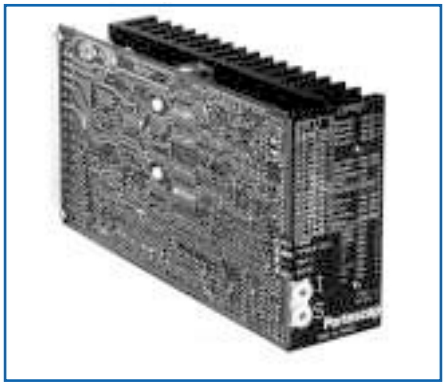

Connector:

Pin	Row A	Row C
2	Phase B^+	Phase B^+
4	Phase B^-	Phase B^-
6	Phase A^+	Phase A^+
8	Phase A^-	Phase A^-
10	Vmot	Vmot
12	GND	GND
14	Output +5V/25 mA	Fault
16	+CW/CCW	-CW/CCW
18	+CLK	-CLK
20	+Stand by	-Stand by
22	+Boost	-Boost
24	Energize	$\overline{\text{NC}}$
26	Home	Damp
28	I_2	a^+ velocity sensor a
30	I_1	a^-b^- velocity sensor a/b
32	I_0	b^+ velocity sensor b

© Portescap

DM224i

Stepper motor drive circuit

intelligent microstep driver, bipolar chopper driver

- Complete microstep controller & driver in one package
- Operates Stand-alone/Networked
- Outputs 12-48 V and 3A/phase
- Accepts high level commands directly; no indexer required



- Ultra compact, panel mount package

Specifications

1	Power supply voltage	12 V to 48 V, unregulated
2	Motor current	0.1 to 3 A continuous, software programmable
3	Logic inputs	7 general purpose TTL inputs, software programmable
4	Logic outputs	4 general purpose TTL outputs, 16 mA max. current
5	Resolution	12800 steps/rev., auto switch to full step at software programmable velocity
6	Ramp	linear acceleration ramp
7	Speed range	0 to 6000 rpm (motor dependant)
8	Multi axis	switch selectable up to 32 axis
9	Protection	bus overvoltage, short circuit phase to phase and phase to Ground
10	Size / Connector	129.3 x 82 x 50.8 mm / see below

The DM-224i incorporates the functionality of an indexer and drive in a single integrated unit.
This microcontroller-based, recirculating current micro-stepping drive is ideal for single and multiple axis OEM applications.

The DM-224i can be operated stand-alone with local program storage, or up to 32 DM-224i drivers can be networked from a single PC serial port or similar host interface.
Multi-axis start and stop, along with on-the-move speed change are only a few of its networked features.

In addition, the DM-224i auto-switches to and from two-phase, full-step mode at a fixed velocity to increase efficiency. Two-phase, full stepping provides up to 33% higher torque output from the motor.

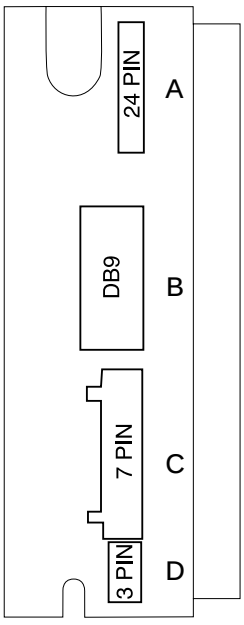

A - Input / Output connector

Pin	Signal	Pin	Signal
23	TTL Return	24	Shield
21	Output 4	22	N/C
19	Output 3	20	N/C
17	Output 2	18	N/C
15	Output 1	16	N/C
13	Input 7	14	N/C
11	Input 6	12	N/C
9	Input 5	10	N/C
7	Input 4	8	N/C
5	Input 3	6	N/C
3	Input 2	4	N/C
1	Input 1	2	N/C

B - PC Serial Port connector

DB9-F Pin #	RS-232 Prim.	RS-422 RS-485
1	N/C	Tx+
2	Tx	Tx-
3	Rx	Rx-
4	N/C	Rx+
5	COM	COM
6	N/C	N/C
7	N/C	N/C
8	N/C	N/C
9	N/C	N/C

C - Motor connector

Pin	
1	A+
2	A-
3	Shield
4	B+
5	B-
6	N/C
7	N/C

D - Supply Voltage connector

Pin	
1	+DC
2	-DC
3	GND

Availability: see document at the end of the catalogue

© Portescap

Small Brushless DC Motor data sheet section



Table of contents

Motor type	page
18BT	100
22BT	101
13BC	102
16BS	103
16BL	104
22BS	105
22BM	106
22BL	107
26BC3C	108
26BC6A	109
B0504 / B0508 / B0512	110
RS 05	111
B0906 / B0909 / B0912	112
RS 09	113
ESB-485 Drive circuit	114
BL5010 Drive circuit	114

© Portescap

escap 18BT

BLDC Motor

Electronically commutated sensorless motor with rotating external tube

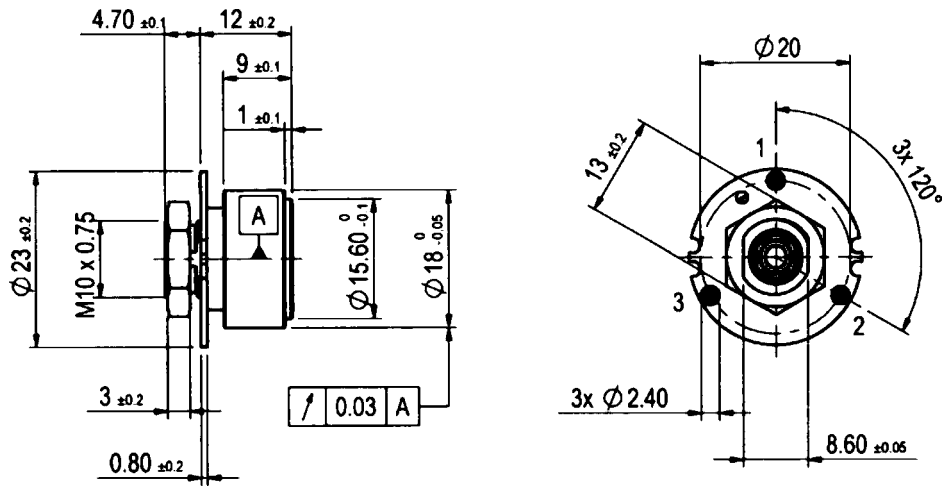

scale: 1:1
dimensions in mm
mass: 16 g

18BT 3C••02

Connections

Pin	Designation
1	phase 1
2	phase 2
3	phase 3

Winding type	••	-L
Coil dependent parameters		
1 Phase / phase resistance	ohm	58.0
2 Phase / phase inductance	mH	2.3
3 Back-EMF constant	V/1000 rpm	0.70
4 Torque constant	mNm/A (oz-in/A)	6.68 (0.95)
Dynamic parameters		
5 Rated voltage	V	5.0
6 No-load current	A	0.015
7 No-load speed	rpm	5900
8 Max. continuous stall torque	mNm (oz-in)	1.2 (0.17)
9 Max. continuous stall current	A	0.20
10 Max. continuous torque at 10 krpm	mNm (oz-in)	1.2 (0.17)
11 Max. continuous current at 10 krpm	A	0.20
12 Max. continuous power at 10 krpm	W	4.6
Intrinsic parameters		
13 Motor constant	$mNm/W^{1/2}$ ($oz\text{-}in/W^{1/2}$)	0.9 (0.12)
14 Rotor inertia	$kgm^2 . 10^{-7}$	5.3
15 Mechanical time constant	ms	688
16 Electrical time constant	ms	0.04
17 Thermal resistance	°C/W	30

EBS 485 SI

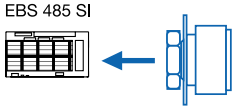

- Motor with preloaded ball bearings
- Typical preload = 3.0 N
- Maximum external load:
  - axial static 40 N
  - axial dynamic 3 N
  - radial dynamic 7 N
- Operating temperature range: -40°C to +100°C
- Max. rated coil temperature: 125°C
- The rotor is not balanced

The 18BT-3C is a sensorless motor with a delta-connected winding. It is intended to use with a sensorless driver such as the EBS 485 SI or a driver using, for instance, a chip of the Philips TDA family. If the winding center-point is needed, it can be generated by using three external resistors attached to the motor phases and Y-connected together.

© Portescap

Specifications subject to change without prior notice

escap 22BT

BLDC Motor

D.C. Motor with integrated electronic commutation and rotating external tube

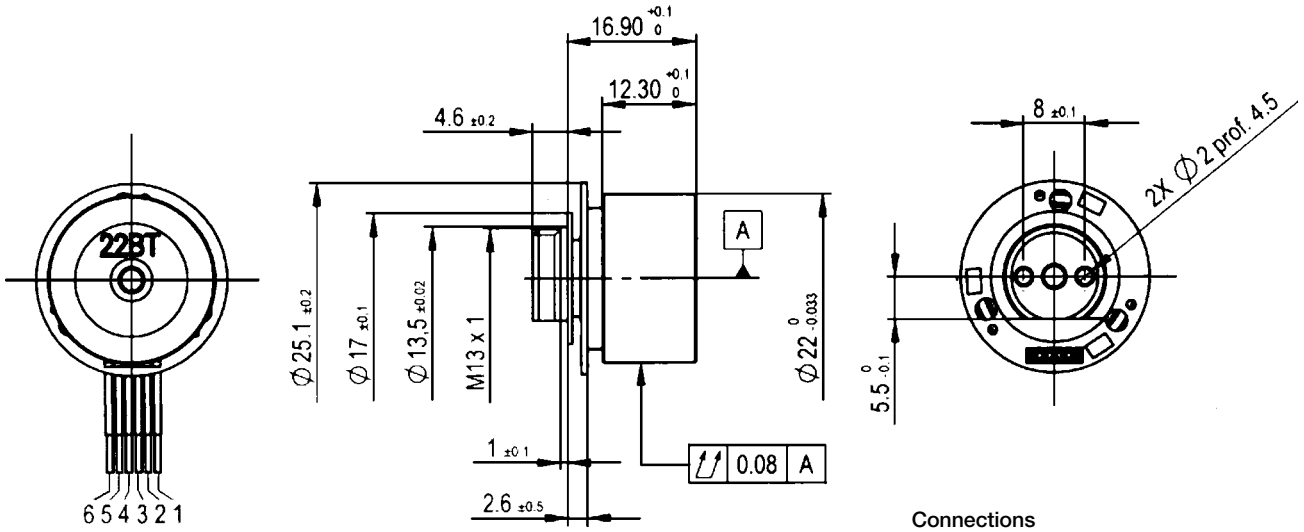

scale: 1:1
dimensions in mm
mass: 32 g

22BT 6A••05

Connections

Pin	Color	Designation
1	brown	GND
2	red	power supply voltage [1]
3	orange	direction CCW/CW [4]
4	yellow	enable start/stop [4]
5	green	logic supply voltage [2]
6	blue	speed signal [3]

Winding type	••	-E	-K	-P
Coil dependent parameters				
1 Phase / phase resistance	ohm	38.0	18.7	8.2
2 Phase / phase inductance	mH	1.52	0.75	0.33
3 Back-EMF constant	V/1000 rpm	0.90	0.78	0.59
4 Torque constant	mNm/A (oz-in/A)	8.59 (1.22)	7.45 (1.05)	5.63 (0.80)
Dynamic parameters				
5 Rated voltage	V	5.0	5.0	5.0
6 No-load current	A	0.035	0.047	0.071
7 No-load speed	rpm	4100	5300	7500
8 Max. continuous stall torque	mNm (oz-in)	2.1 (0.30)	2.6 (0.37)	3.0 (0.43)
9 Max. continuous stall current	A	0.28	0.40	0.60
10 Max. continuous torque at 10 krpm	mNm (oz-in)	2.0 (0.29)	2.5 (0.35)	2.8 (0.40)
11 Max. continuous current at 10 krpm	A	0.27	0.38	0.57
12 Max. continuous power at 10 krpm	W	6.3	6.8	7.2
Intrinsic parameters				
13 Motor constant	$mNm/W^{1/2}$ ($oz\text{-}in/W^{1/2}$)	1.4 (0.20)	1.7 (0.24)	2.0 (0.28)
14 Rotor inertia	$kgm^2 . 10^{-7}$	17.7	17.7	17.7
15 Mechanical time constant	ms	911	597	457
16 Electrical time constant	ms	0.04	0.04	0.04
17 Thermal resistance	°C/W	24	24	24

- Motor with preloaded ball bearings
- Typical preload = 3.5 N
- Maximum external load:
  - axial static 50 N
  - axial dynamic 5 N
  - radial dynamic 10 N
- Operating temperature range: -0°C to +70°C
- Max. rated coil temperature: 125°C
- Rotor not balanced

- Integrated electronic commutation
- **Warning: an incorrect supply voltage polarity may damage the electronic circuitry!**

[1] The motor supply voltage may vary between 2.5 V and 10 V. The use of Mosfets in the power stage provides a very low voltage drop.

[2] The logic supply voltage may vary between 5 V and 10 V. By connecting pin 2 and pin 5 together, the motor becomes a two-wire version identical to a DC motor. In this case, the supply voltage may only vary between 5 V and 10 V.

[3] A square wave voltage with one pulse per revolution is available on pin 6
low level = OV/high level = same as on pin 5.

[4] Pins 3 and 4 have pull up resistor of 120 kohm.

© Portescap

Specifications subject to change without prior notice

escap 13BC

Electronically commutated sensorless motor

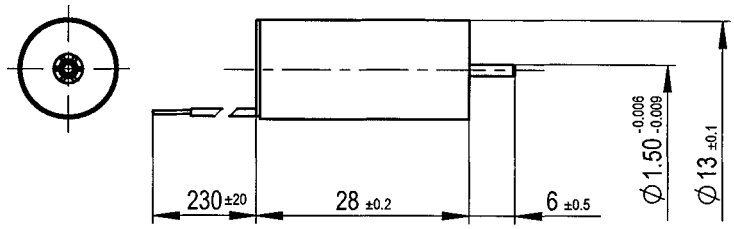

scale: 1:1
dimensions in mm
mass: 19 g

13BC 3C••05

Connections

Color	Designation
white	phase 1
grey	phase 2
violet	phase 3

Winding type	••	-E	-H	-K	-P
Coil dependent parameters					
1 Phase / phase resistance	ohm	22.5	14.8	10.4	5.6
2 Phase / phase inductance	mH	0.68	0.44	0.31	0.17
3 Back-EMF constant	V/1000 rpm	0.84	0.69	0.58	0.46
4 Torque constant	mNm/A (oz-in/A)	8.02 (1.14)	6.59 (0.93)	5.54 (0.78)	4.39 (0.62)
Dynamic parameters					
5 Rated voltage	V	10	10	10	10
6 No-load current	A	0.054	0.068	0.085	0.114
7 No-load speed	rpm	9300	11600	14000	18200
8 Max. continuous stall torque	mNm (oz-in)	1.8 (0.3)	1.8 (0.3)	1.8 (0.3)	1.9 (0.3)
9 Max. continuous stall current	A	0.28	0.34	0.41	0.55
10 Max. continuous torque at 10 krpm	mNm (oz-in)	1.6 (0.2)	1.6 (0.2)	1.5 (0.2)	1.7 (0.2)
11 Max. continuous current at 10 krpm	A	0.25	0.31	0.36	0.49
12 Max. continuous power at 10 krpm	W	4.1	4.1	4.0	4.1
Intrinsic parameters					
13 Motor constant	$mNm/W^{1/2}$ ($oz\text{-}in/W^{1/2}$)	1.7 (0.2)	1.7 (0.2)	1.7 (0.2)	1.9 (0.3)
14 Rotor inertia	$kgm^2 . 10^{-7}$	0.22	0.22	0.22	0.22
15 Mechanical time constant	ms	8	7	7	6
16 Electrical time constant	ms	0.03	0.03	0.03	0.03
17 Thermal resistance	°C/W	42	42	42	42

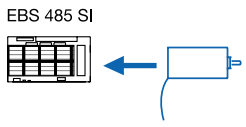

The 13BC-3C is a sensorless motor with a delta-connected winding. It is intended to use with a sensorless driver such as the EBS 485 SI or a driver using, for instance, a chip of the Philips TDA family. If the winding center-point is needed, it can be generated by using three external resistors attached to the motor phases and Y-connected together.

© Portescap

Specifications subject to change without prior notice

escap 16BS

Electronically commutated sensorless motor

BLDC Motor

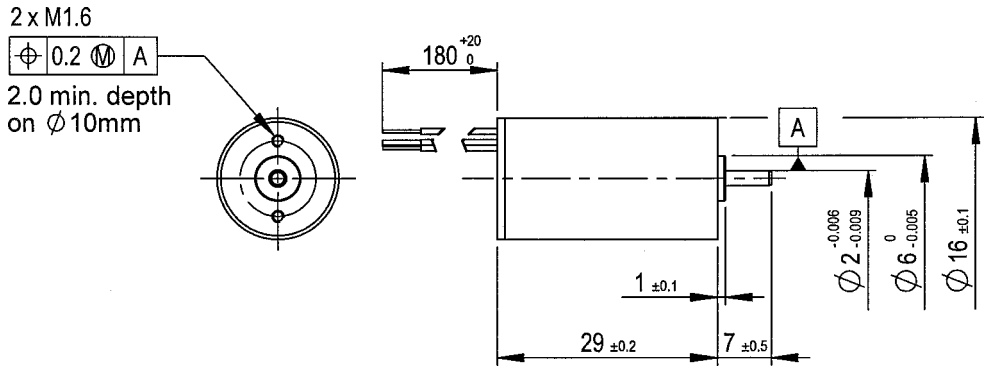

scale: 1:1
dimensions in mm
mass: 29 g

16BS 3C••01

Connections

Color	Designation
grey	phase 1
violet	phase 2
blue	phase 3

Winding type	••	-L
Coil dependent parameters		
1 Phase / phase resistance	ohm	12.6
2 Phase / phase inductance	mH	0.50
3 Back-EMF constant	V/1000 rpm	1.00
4 Torque constant	mNm/A (oz-in/A)	9.55 (1.35)
Dynamic parameters		
5 Rated voltage	V	12
6 No-load current	A	0.052
7 No-load speed	rpm	11300
8 Max. continuous stall torque	mNm (oz-in)	3.9 (0.55)
9 Max. continuous stall current	A	0.46
10 Max. continuous torque at 10 krpm	mNm (oz-in)	3.6 (0.51)
11 Max. continuous current at 10 krpm	A	0.43
12 Max. continuous power at 10 krpm	W	7.6
Intrinsic parameters		
13 Motor constant	$mNm/W^{1/2}$ ($oz\text{-}in/W^{1/2}$)	2.7 (0.38)
14 Rotor inertia	$kgm^2 . 10^{-7}$	0.6
15 Mechanical time constant	ms	8.3
16 Electrical time constant	ms	0.04
17 Thermal resistance	°C/W	26

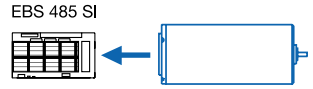

- Motor with preloaded ball bearings
- Typical preload = 3.5 N
- Maximum external load:
  - axial static 25 N
  - axial dynamic 2 N
  - radial dynamic 5 N
- Operating temperature range: -40°C to +100°C
- Max. rated coil temperature: 125°C

The 16BS-3C is a sensorless motor with a delta-connected winding. It is intended to use with a sensorless driver such as the EBS 485 SI or a driver using, for instance, a chip of the Philips TDA family. If the winding center-point is needed, it can be generated by using three external resistors attached to the motor phases and Y-connected together.

© Portescap

Specifications subject to change without prior notice

escap 16BL

Electronically commutated sensorless motor

BLDC Motor

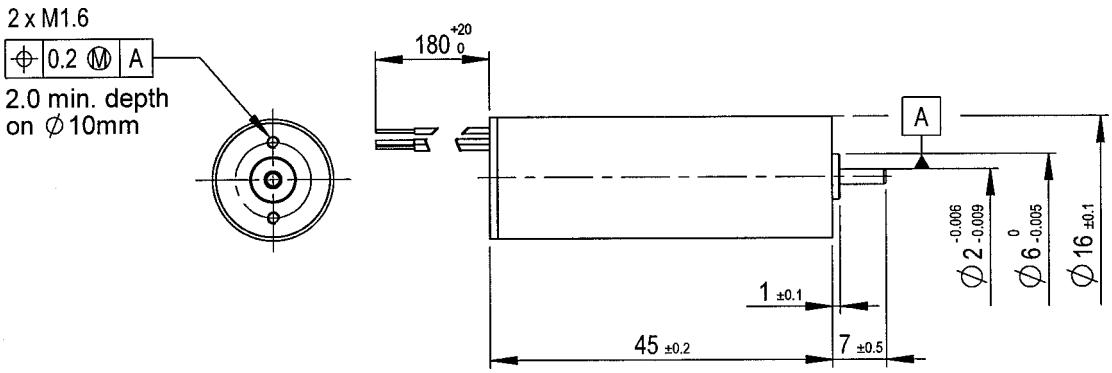

scale: 1:1
dimensions in mm
mass: 53 g

16BL 3C•01

Connections

Color	Designation
grey	phase 1
violet	phase 2
blue	phase 3

Winding type		-L
Coil dependent parameters		
1 Phase / phase resistance	ohm	0.70
2 Phase / phase inductance	mH	0.03
3 Back-EMF constant	V/1000 rpm	0.45
4 Torque constant	mNm/A (oz-in/A)	4.30 (0.61)
Dynamic parameters		
5 Rated voltage	V	12
6 No-load current	A	0.23
7 No-load speed	rpm	26300
8 Max. continuous stall torque	mNm (oz-in)	8.2 (1.16)
9 Max. continuous stall current	A	2.2
10 Max. continuous torque at 10 krpm	mNm (oz-in)	7.1 (1.0)
11 Max. continuous current at 10 krpm	A	1.9
12 Max. continuous power at 10 krpm	W	11.9
Intrinsic parameters		
13 Motor constant	$mNm/W^{1/2}$ ($oz\text{-}in/W^{1/2}$)	5.1 (0.72)
14 Rotor inertia	$kgm^2 . 10^{-7}$	1.1
15 Mechanical time constant	ms	4.2
16 Electrical time constant	ms	0.04
17 Thermal resistance	°C/W	22

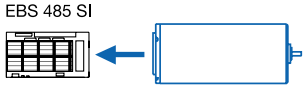

- Motor with preloaded ball bearings
- Typical preload = 4.5 N
- Maximum external load:
  - axial static 25 N
  - axial dynamic 2 N
  - radial dynamic 5 N
- Operating temperature range: -40°C to +100°C
- Max. rated coil temperature: 125°C

The 16BL-3C is a sensorless motor with a delta-connected winding. It is intended to use with a sensorless driver such as the EBS 485 SI or a driver using, for instance, a chip of the Philips TDA family. If the winding center-point is needed, it can be generated by using three external resistors attached to the motor phases and Y-connected together.

© Portescap

Specifications subject to change without prior notice

escap 22BS

Electronically commutated motor

BLDC Motor

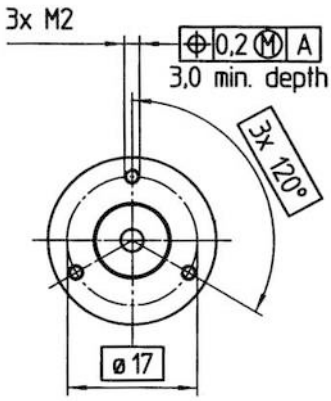

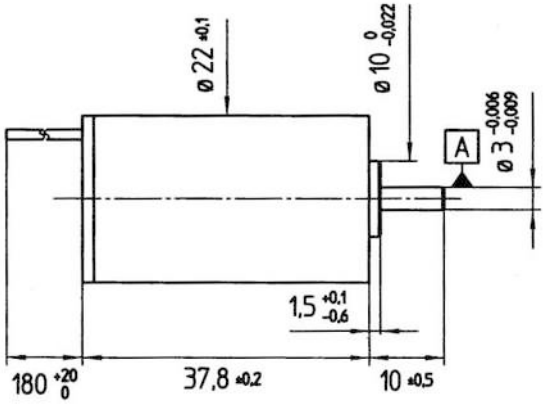

scale: 1:1
dimensions in mm
mass: 75 g

22BS 3C□•01

Sensorless

Color	Designation
grey	phase 1
violet	phase 2
blue	phase 3

With Hall effect sensors

Color	Designation
grey	phase 1
violet	phase 2
blue	phase 3
green	4.5 to 24 VDC
yellow	GND
orange	sensor 1
red	sensor 2
brown	sensor 3

Winding type	□	-B	-C	-E	-M	-N	-T
Coil dependent parameters							
1 Phase / phase resistance	ohm	24.10	12.70	5.40	1.13	0.43	0.21
2 Phase / phase inductance	mH	0.96	0.51	0.22	0.05	0.02	0.01
3 Back-EMF constant	V/1000 rpm	2.40	1.80	1.18	0.53	0.30	0.20
4 Torque constant	mNm/A (oz-in/A)	22.92 (3.25)	17.19 (2.43)	11.27 (1.60)	5.06 (0.72	2.86 (0.41)	1.91 (0.27)
Dynamic parameters							
5 Rated voltage	V	24	24	24	12	12	12
6 No-load current	A	0.03	0.03	0.07	0.16	0.35	0.63
7 No-load speed	rpm	9700	13100	20000	22300	39500	59300
8 Max. continuous stall torque	mNm (oz-in)	8.7 (1.24)	9.0 (1.28)	8.9 (1.26)	8.7 (1.24)	7.7 (1.10)	7.1 (1.01)
9 Max. continuous stall current	A	0.4	0.6	0.9	1.9	3.0	4.4
10 Max. continuous torque at 10 krpm	mNm (oz-in)	8.2 (1.16)	8.5 (1.20)	8.1 (1.15)	8.0 (1.13)	6.9 (0.97)	6.1 (0.87)
11 Max. continuous current at 10 krpm	A	0.4	0.5	0.8	1.7	2.8	3.8
12 Max. continuous power at 10 krpm	W	14.2	14.5	14.1	14.0	12.8	12.0
Intrinsic parameters							
13 Motor constant	$mNm/W^{1/2}$ ($oz\text{-}in/W^{1/2}$)	4.7 (0.66)	4.8 (0.68)	4.8 (0.69)	4.8 (0.67)	4.4 (0.62)	4.2 (0.59)
14 Rotor inertia	$kgm^2 . 10^{-7}$	2.1	2.1	2.1	2.1	2.1	2.1
15 Mechanical time constant	ms	9.6	9.0	8.9	9.3	11.0	12.1
16 Electrical time constant	ms	0.04	0.04	0.04	0.04	0.04	0.04
17 Thermal resistance	°C/W	18	18	18	18	18	18

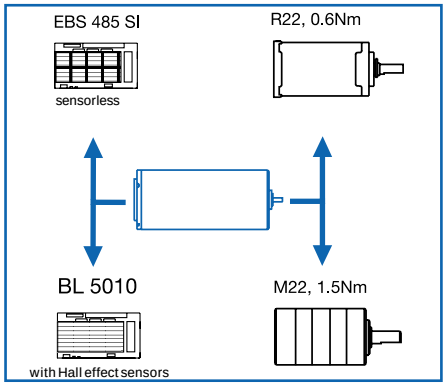

- Motor with preloaded ball bearings
- Typical preload = 6 N
- Maximum external load:
  - axial static 50 N
  - axial dynamic 5 N
  - radial dynamic 10 N
- Operating temperature range: -40°C to +100°C
- Max. rated coil temperature: 125°C

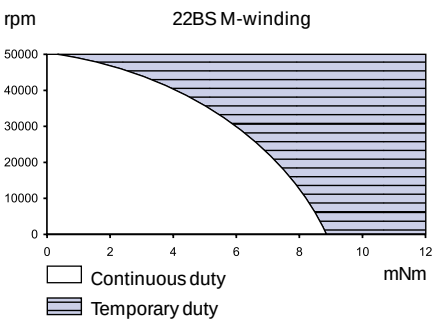

© Portescap

Specifications subject to change without prior notice

escap 22BM

Electronically commutated motor

BLDC Motor

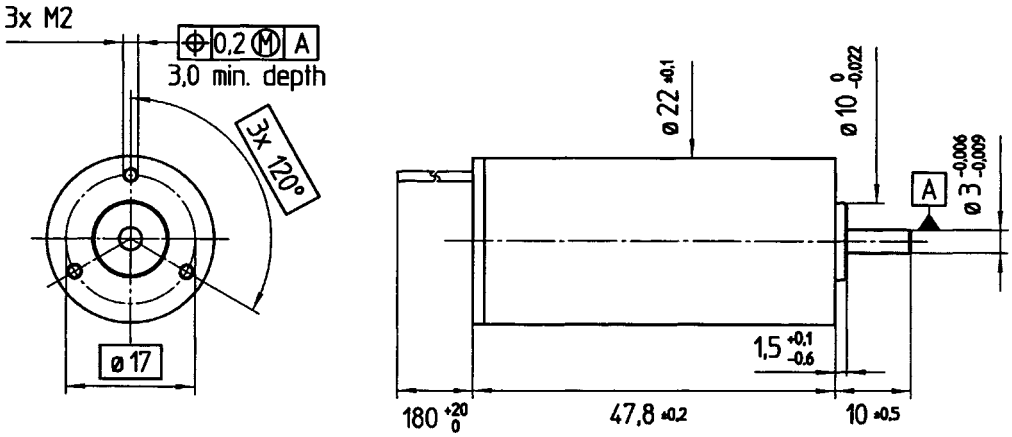

scale: 1:1
dimensions in mm
mass: 100 g

22BM 3C□•01

Sensorless

Color	Designation
grey	phase 1
violet	phase 2
blue	phase 3

22BM 8B□•01

With Hall effect sensors

Color	Designation
grey	phase 1
violet	phase 2
blue	phase 3
green	4.5 to 24 VDC
yellow	GND
orange	sensor 1
red	sensor 2
brown	sensor 3

Winding type	□	-C	-E	-H	-K	-P
Coil dependent parameters						
1 Phase / phase resistance	ohm	14.36	6.28	0.97	0.63	0.34
2 Phase / phase inductance	mH	0.57	0.25	0.04	0.03	0.01
3 Back-EMF constant	V/krpm	2.68	1.77	0.80	0.65	0.45
4 Torque constant	mNm/A (oz-in/A)	25.59 (3.62)	16.90 (2.39)	7.64 (1.08)	6.21 (0.87)	4.30 (0.60)
Dynamic parameters						
5 Rated voltage	V	30	30	30	24	24
6 No-load current	A	0.03	0.05	0.13	0.16	0.30
7 No-load speed	rpm	11000	16800	37300	36800	53100
8 Max. continuous stall torque	mNm (oz-in)	13.5 (1.91)	13.5 (1.91)	15.5 (2.19)	15.6 (2.20)	14.3 (2.02)
9 Max. continuous stall current	A	0.6	0.8	2.2	2.7	3.6
10 Max. continuous torque at 10 krpm	mNm (oz-in)	12.5 (1.77)	12.6 (1.78)	14.0 (1.98)	14.1 (1.99)	12.5 (1.77)
11 Max. continuous current at 10 krpm	A	0.5	0.8	2.0	2.4	3.2
12 Max. continuous power at 10 krpm	W	19.4	19.5	21.0	21.0	19.4
Intrinsic parameters						
13 Motor constant	$mNm/W^{1/2}$ ($oz\text{-}in/W^{1/2}$)	6.8 (0.96)	6.7 (0.96)	7.8 (1.10)	7.8 (1.10)	7.4 (1.04)
14 Rotor inertia	$kgm^2 . 10^{-7}$	3.0	3.0	3.0	3.0	3.0
15 Mechanical time constant	ms	6.6	6.6	5.0	4.9	5.5
16 Electrical time constant	ms	0.04	0.04	0.04	0.04	0.04
17 Thermal resistance	°C/W	16	16	16	16	16

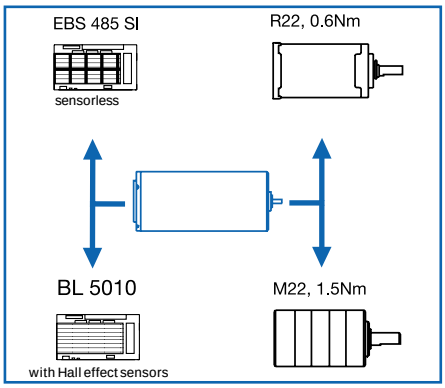

- Motor with preloaded ball bearings
- Typical preload = 6 N
- Maximum external load:
  - axial static 50 N
  - axial dynamic 5 N
  - radial dynamic 10 N
- Operating temperature range: -40°C to +100°C
- Max. rated coil temperature: 125°C

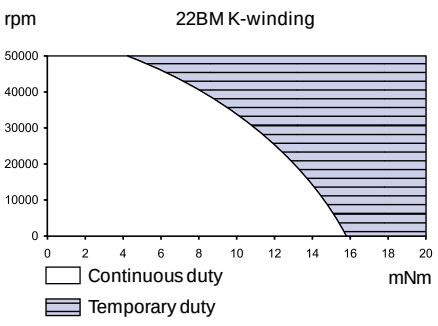

© Portescap

Specifications subject to change without prior notice

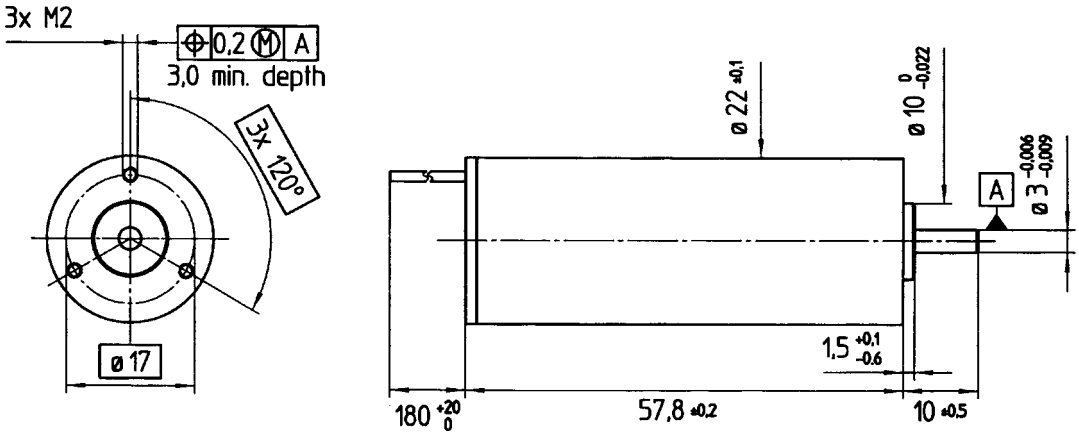

scale: 1:1
dimensions in mm
mass: 125 g

22BL 3C••01
Sensorless

Color	Designation
grey	phase 1
violet	phase 2
blue	phase 3

22BL 8B••01
With Hall effect sensors

Color	Designation
grey	phase 1
violet	phase 2
blue	phase 3
green	4.5 to 24 VDC
yellow	GND
orange	sensor 1
red	sensor 2
brown	sensor 3

Winding type	••	-K	-P
Coil dependent parameters			
1 Phase / phase resistance	ohm	0.77	0.41
2 Phase / phase inductance	mH	0.03	0.02
3 Back-EMF constant	V/1000 rpm	0.94	0.65
4 Torque constant	mNm/A (oz-in/A)	8.98 (1.27)	6.21 (0.88)
Dynamic parameters			
5 Rated voltage	V	24	24
6 No-load current	A	0.13	0.19
7 No-load speed	rpm	25400	36800
8 Max. continuous stall torque	mNm (oz-in)	22.8 (3.22)	21.6 (3.06)
9 Max. continuous stall current	A	2.7	3.7
10 Max. continuous torque at 10 krpm	mNm (oz-in)	20.8 (2.94)	19.6 (2.77)
11 Max. continuous current at 10 krpm	A	2.5	3.4
12 Max. continuous power at 10 krpm	W	29.5	28.2
Intrinsic parameters			
13 Motor constant	$mNm/W^{1/2}$ ($oz\text{-}in/W^{1/2}$)	10.2 (1.45)	9.7 (1.37)
14 Rotor inertia	$kgm^2 . 10^{-7}$	3.9	3.9
15 Mechanical time constant	ms	3.7	4.2
16 Electrical time constant	ms	0.04	0.04
17 Thermal resistance	°C/W	13	13

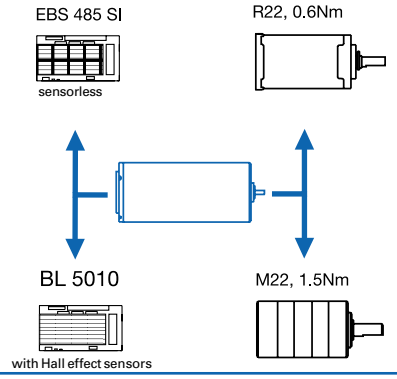

- Motor with preloaded ball bearings
- Typical preload = 6 N
- Maximum external load:
  - axial static 50 N
  - axial dynamic 5 N
  - radial dynamic 10 N
- Operating temperature range: -40°C to +100°C
- Max. rated coil temperature: 125°C

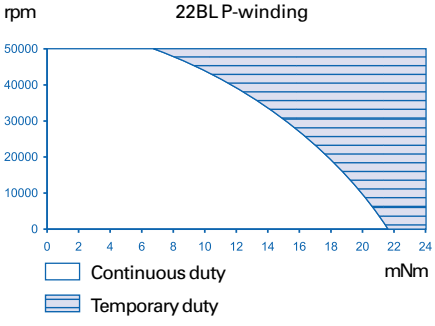

© Portescap

Specifications subject to change without prior notice

escap 26BC

Electronically commutated sensorless motor

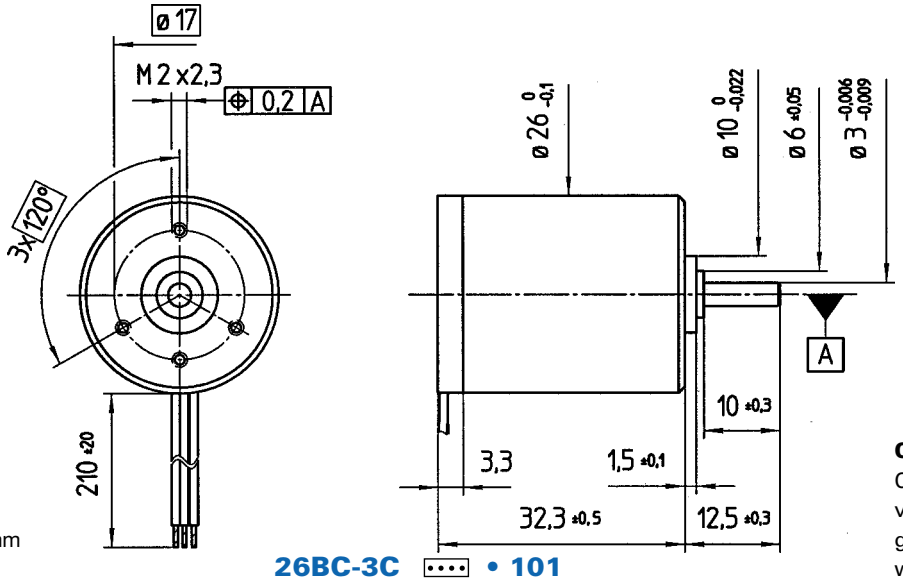

scale: 1:1
dimensions in mm
mass: 72 g

26BC-3C •••• • 101

Connections

Color	Designation
violet	phase 1
grey	phase 2
white	phase 3

Winding type		•••• -109P
Coil dependent parameters		
1 Phase resistance	ohm	5
2 Phase inductance	mH	3.8
3 Back-EMF constant	V/1000 rpm	0.73
4 Torque constant	mNm/A	7
5 Max. continuous current	mA	1000
Coil independent parameters		
6 Friction torque	mNm	0.3
7 Viscous torque (losses)	mNm/1000rpm	0.047
8 Max. cont. torque (up to 10000 rpm)	mNm	7
9 Max. recommended speed	rpm	20000
Mechanical parameters		
10 Rotor inertia	$kgm^2 . 10^{-7}$	9.4
11 Mechanical time constant	ms	95
Dynamic performances with EBS 485 SI		
12 Rated voltage	V	12
13 No load current	mA	180
14 No load speed	rpm	14800
15 Peak torque	mNm	7

The 26BC-3C is a sensorless motor with a delta-connected winding. It is intended to use with a sensorless driver such as the EBS 485 SI or a driver using, for instance, a chip of the Philips TDA family. If the winding center-point is needed, it can be generated by using three external resistors attached to the motor phases and Y-connected together.

EBS 485 SI

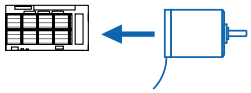

Thermal time constant	mn	11
Thermal resistance	°C/W	14
Axial play*	µm	10
Radial play (2.5N rad.load)	µm	10
Axial load (static)	N	50
Radial load (static)	N	50

*with axial load > 2.5N, max. axial play is 130µm

© Portescap

Specifications subject to change without prior notice

escap 26BC

D.C. Motor with integrated electronic commutation

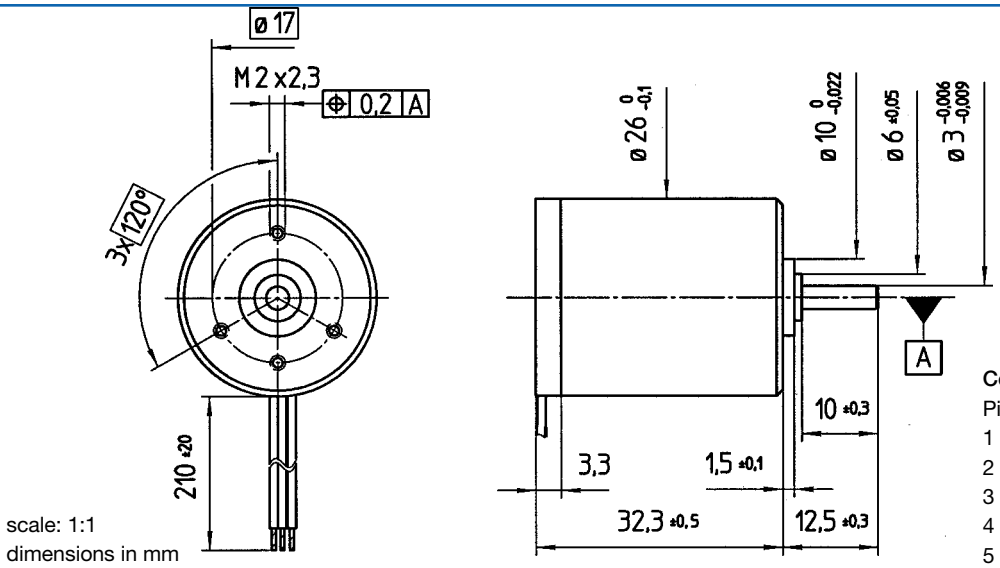

scale: 1:1
dimensions in mm
mass: 72 g

26BC-6A ▪▪▪▪ • 101

Connections

Pin	Color	Designation
1	brown	GND
2	red	power supply voltage [1]
3	orange	direction CCW/CW [5]
4	yellow	enable start/stop [3] [5]
5	green	logic supply voltage [2]
6	blue	speed signal [4]

Winding type	▪▪▪▪	-119	-113	-110	-107
Coil dependent parameters					
1 Phase resistance	ohm	1.9	6.8	17.6	69
2 Phase inductance	mH	0.23	0.71	1.65	5.8
3 Back-EMF constant	V/1000 rpm	0.56	0.96	1.4	2.66
4 Torque constant	mNm/A (oz-in/A)	5.4 (0.7)	9.2 (1.3)	13.4 (1.9)	25.4 (3.6)
5 Max. continuous current	A	1.2	0.6	0.4	0.2
Coil independent parameters					
6 Friction torque	mNm	0.25	0.25	0.25	0.25
7 Viscous torque (losses)	mNm/1000 rpm	0.4	0.4	0.4	0.4
8 Max. cont. torque (up to 10k rpm)	mNm (oz-in)	4 (0.56)	4.2 (0.6)	4.4 (0.62)	4 (0.56)
9 Max. recommended speed	rpm	14000	8000	11000	4800
Mechanical parameters					
10 Rotor inertia	$kgm^2 . 10^{-7}$	9.4	9.4	9.4	9.4
11 Mechanical time constant	ms	61	75	92	100
Dynamic performances					
12 Rated voltage	V	7.5	7.5	15	15
13 No load current	mA	250	170	120	50
14 No load speed	rpm	12500	7250	9300	4700
15 Peak speed	rpm	14000	8000	11000	5600
16 Peak torque	mNm (oz-in)	4 (0.56)	4.2 (0.6)	4.4 (0.62)	4 (0.56)

Thermal time constant	mn	11
Thermal resistance	°C/W	14
Axial play*	µm	10
Radial play (2.5 N rad.load)	µm	10
Axial load (static)	N	50
Radial load (static)	N	50

*With axial load > 2.5N, the max. axial play is 130µm

Availability: see enclosed document at the end of the catalogue

- Integrated electronic commutation
- **Warning: an incorrect supply voltage polarity may damage the electronic circuitry!**
- Standard version with preloaded ball bearings
- Max. permissible coil temp. 130°C (266°F)
- Recommended ambient temperature range 0 to 70°C (32 to 158°F)
- The current consumption of the electronics is 18 mA

[1] The motor supply voltage may vary between 2.5V and 18V except for the -119 and -113 coils where the voltage should be limited to 7.5 V.

[2] The logic supply voltage may vary between 5 and 18 V. By connecting 2 and 5 together, the motor becomes a simple two wires version exactly like a DC motor. In this case, the supply voltage may vary between 5 V and 18 V except for the -119 and -113 coils where the voltage should be limited to 7.5 V.

[3] start/stop: when grounded, the motor is no more powered.

[4] Available on output 6 is a square wave voltage: low level = GND, high level = + V logic.

[5] Inputs 3-4 have pull up resistors of 120 kohm.

Speed/torque range of the various windings

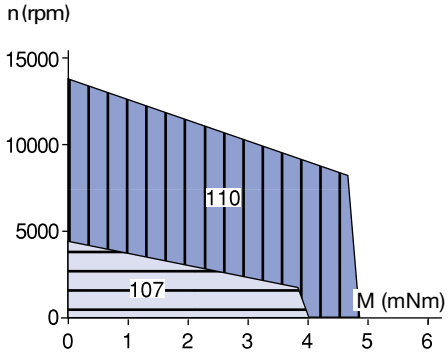

© Portescap

Specifications subject to change without prior notice

B0504 - B0508 - B0512

High speed BLDC Motor

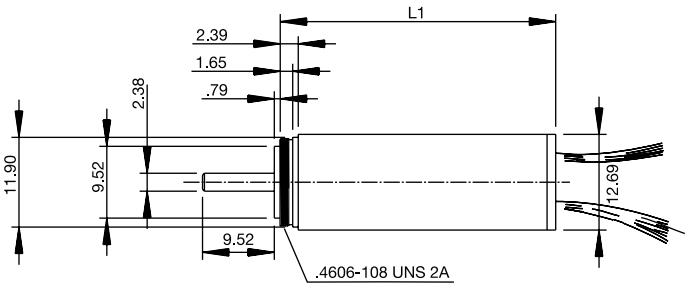

dimensions in mm
mass : 23 g / 34 g / 45 g

B05.. - ••••

Connections

hall sensors:

1	red	Vcc
2	black	GND
3	yellow	S1
4	orange	S2
5	white	S3

motor:

6	blue	phase A
7	brown	phase B
8	violet	phase C

Motor type		B0504		B0508		B0512	
Coil dependent parameters/Winding type	••••	050A	050B	050A	050B	050A	050B
1 Phase resistance	ohm	28.6	110.5	7.6	30.3	4.3	17.2
2 Phase inductance	mH	1.11	4.33	0.38	1.51	0.24	0.94
3 Back-EMF constant	V/1000 rpm	0.67	1.33	0.63	1.25	0.67	1.34
4 Torque constant	mNm/A (oz-in/A)	6.4 (0.91)	12.7 (1.8)	6 (0.85)	12 (1.7)	6.4 (0.91)	12.8 (1.81)
5 Max. continuous current	A	0.290	0.147	0.632	0.316	0.979	0.487
Coil independent parameters							
6 Friction torque	mNm (oz-in)	0.18 (0.03)		0.35 (0.05)		0.53 (0.08)	
7 Viscous torque (losses)	mNm/1000 rpm	0.00015		0.00049		0.001	
8 Max. continuous torque	mNm (oz-in)	1.9 (0.26)		3.8 (0.53)		6.2 (0.88)	
9 Max. recommended speed	rpm	80000		80000		80000	
Mechanical parameters							
10 Rotor inertia	$kgm^2 . 10^{-7}$	0.21		0.35		0.50	
11 Mechanical time constant	ms	15		7		5	
Dynamic performances with BL 5010							
12 Rated voltage	V	50		50		50	
13 No load current	mA	55	35	125	75	195	100
14 No load speed	rpm	69000	33000	75000	36500	70000	34500
15 Peak speed	rpm	71000	36000	76500	38000	72000	36000
16 Peak torque	mNm (oz-in)	10.8 (1.5)	5.5 (0.78)	38 (5.3)	19 (2.68)	71 (10.1)	36 (5.04)
Length L1	mm	23.8		36.5		49.2	
Thermal time constant	s	102		140		176	
Thermal resistance rotor-ambient	°C/W	35.8		28.4		21	
Axial play	µm	81		81		81	
Radial play	µm	25		25		25	
Axial load (static)	N	50		50		50	
Radial load (static) @ 9.6 mm	N	30		30		30	

- Motor with preloaded ball bearings.
- Shaft must be supported for press-fitting a pulley or pinion.

- The B05 is a three phase motor with wye connections of the coils.
- Hall sensors: supply voltage 4.5 V to 24 VDC. Externall pull-up resistor 4.7 kohm (typ.)

- Gearbox option: planetary RS05
- An autoclavable version of this motor series is also available

Curves with 50VDC current source driver

n (rpm) x 1000

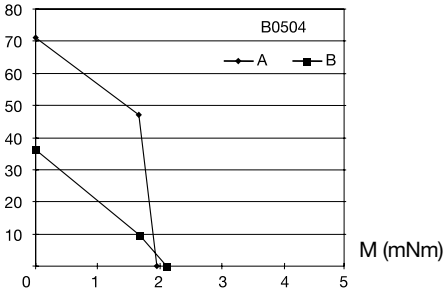

n (rpm) x 1000

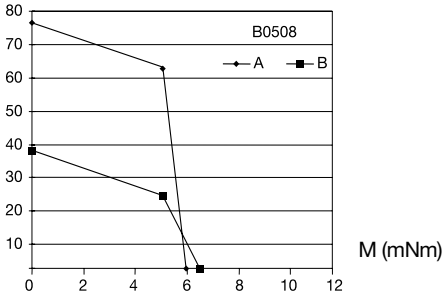

n (rpm) x 1000

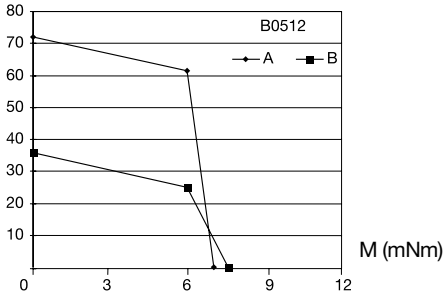

© Portescap

Specifications subject to change without prior notice

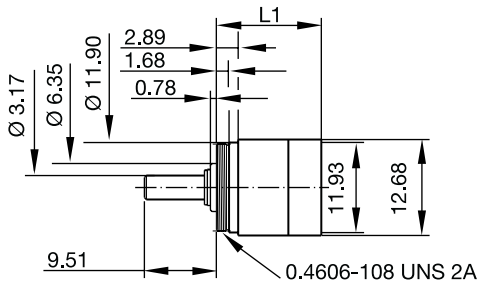

scale 1:1
dimensions in mm

RS05 • ••••

Ratio ••••		**5**	**15**	**25**
1	No. of gear stages	1	2	2
2	Dir. of rotation	=	=	=
3	Efficiency (%)	85-92	75-90	75-90
4	L1 (mm)	13.9	18.26	18.26
5	Mass (g)	8.8	11.9	11.9
6	**Available with motor**	**L2- length with motor (mm)**		
	B0504	35.3	39.7	39.7
	B0508	48	52.4	52.4
	B0512	60.7	65.1	65.1

Availability: see enclosed document at the end of the catalogue

Motor + gearbox = L2

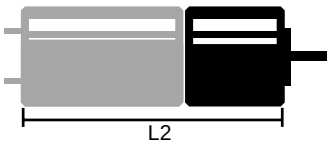

Characteristics			**RS05**
7	Bearing type		ball bearings
8	Max. static torque	Nm (oz-in)	0.8 (113.3)
9	Max. radial force at 8 mm from mounting face	N (lb)	14 (3.15)
10	Max. axial force	N (lb)	82 (18.45)
11	Force for press-fit	N (lb)	--
12	Average backlash at no-load		45'-60'
13	Average backlash at 0,1 Nm		--
14	Radial play	µm	7.5
15	Axial play	µm	12
16	Max. recom. input speed	rpm	50'000
17	Operating temperature range	°C (°F)	0...+155 (+32...+311)

© Portescap

Specifications subject to change without prior notice

B0906 - B0909 - B0912

High speed BLDC Motor

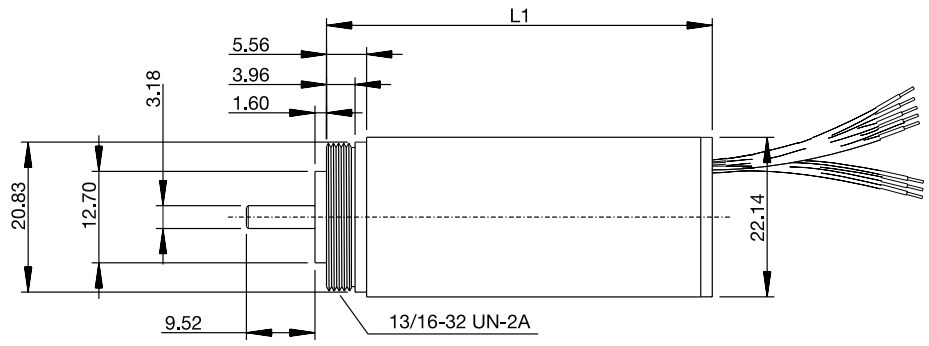

dimensions in mm
mass : 85 g / 170 g / 255 g

B09.. - ••••

Connections

hall sensors:

1	red	Vcc
2	black	GND
3	yellow	S1
4	orange	S2
5	white	S3

motor:

6	blue	phase A
7	brown	phase B
8	violet	phase C

Motor type		B0906		B0909		B0912	
Coil dependent parameters/Winding type	••••	050A	050B	050A	050B	050A	050B
1 Phase resistance	ohm	1.7	6.5	1.0	3.4	0.7	2.25
2 Phase inductance	mH	0.30	1.09	0.19	0.65	0.15	0.50
3 Back-EMF constant	V/1000 rpm	0.87	1.67	0.90	1.68	0.86	1.57
4 Torque constant	mNm/A (oz-in/A)	8.3 (1.2)	16 (2.26)	8.5 (1.21)	16 (2.26)	8.2 (1.16)	15 (2.13)
5 Max. continuous current	A	1.85	0.95	2.50	1.35	3.15	1.70
Coil independent parameters							
6 Friction torque	mNm (oz-in)	0.71 (0.1)		0.88 (0.13)		1.06 (0.15)	
7 Viscous torque (losses)	mNm/1000 rpm	0.0042		0.0079		0.01	
8 Max. continuous torque (up to 10'000 rpm)	mNm (oz-in)	15.3 (2.17)		21.5 (3.05)		25.8 (3.65)	
9 Max. recommended speed	rpm	55000		55000		55000	
Mechanical parameters							
10 Rotor inertia	$kgm^2 . 10^{-7}$	2.5		3		3.6	
11 Mechanical time constant	ms	6		4.2		3.7	
Dynamic performances with BL 5010							
12 Rated voltage	V	50		50		50	
13 No load current	mA	235	175	330	240	425	305
14 No load speed	rpm	54500	28000	53000	28000	56000	30000
15 Peak speed	rpm	55000	28700	54000	28500	56000	30500
16 Peak torque	mNm (oz-in)	232 (33)	118 (17)	423 (60)	227.5 (32.2)	597 (84.5)	321 (45.5)
Length L1	mm	45.1		53.5		61.9	
Thermal time constant	s	330		365		401	
Thermal resistance rotor-ambient	°C/W	14.8		14.0		13.2	
Axial play	µm	112		112		112	
Radial play (2.5N rad.load)	µm	20		20		20	
Axial load (static)	N	180		180		180	
Radial load (static) @ 10.5 mm	N	105		110		113	

- Motor with preloaded ball bearings.
- Shaft must be supported for press-fitting a pulley or pinion.

- The B09 is a three phase motor with wye connections of the coils.
- Hall sensors: supply voltage 4.5 V to 24 VDC. Externall pull-up resistor 4.7 kohm (typ.)

- Gearbox option: planetary RS09
- An autoclavable version of this motor series is also available

Curves with 50VDC current source driver

n (rpm) x 1000

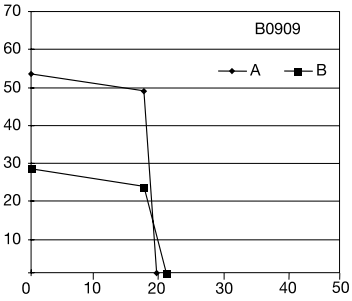

n (rpm) x 1000

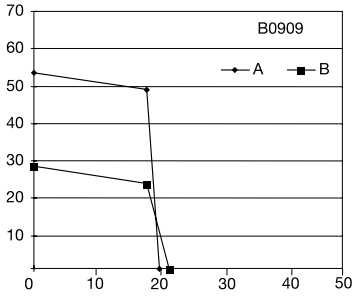

n (rpm) x 1000

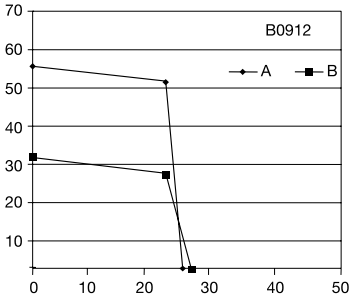

© Portescap

Specifications subject to change without prior notice

RS09

Reduction gearbox with spur gears and planetary gear stage

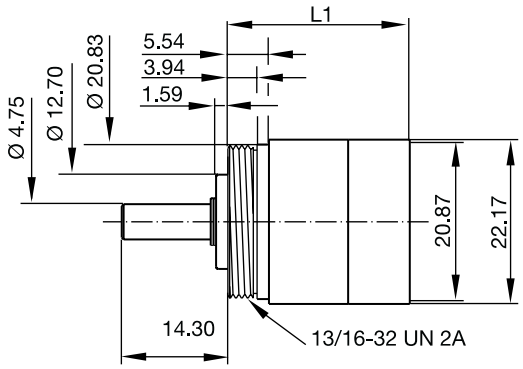

scale 1:1
dimensions in mm

RS09 • ••••

Ratio ••••	4	5	7	12	15	16	20	21	25	28	35	49
1 No. of gear stages	1	1	1	2	2	2	2	2	2	2	2	2
2 Dir. of rotation	=	=	=	=	=	=	=	=	=	=	=	=
3 Efficiency (%)	90-95	90-95	90-95	75-90	75-90	75-90	75-90	75-90	75-90	75-90	75-90	75-90
4 L1 (mm)	24.5	24.5	24.5	32.8	32.8	32.8	32.8	32.8	32.8	32.8	32.8	32.8
5 Mass (g)	47	47	47	66	66	66	66	66	66	66	66	66
6 **Available with motor**	**L2- length with motor (mm)**											
B0906	64.1	64.1	64.1	72.4	72.4	72.4	72.4	72.4	72.4	72.4	72.4	72.4
B0909	72.5	72.5	72.5	80.8	80.8	80.8	80.8	80.8	80.8	80.8	80.8	80.8
B0912	80.9	80.9	80.9	89.2	89.2	89.2	89.2	89.2	89.2	89.2	89.2	89.2

Availability: see enclosed document at the of the catalogue

Motor + gearbox = L2

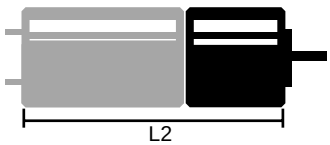

Characteristics		RS09
7 Bearing type		ball bearings
8 Max. static torque	Nm (oz-in)	6 (849.6)
9 Max. radial force at 8 mm from mounting face	N (lb)	108 (24.3)
10 Max. axial force	N (lb)	398 (89.55)
11 Force for press-fit	N (lb)	--
12 Average backlash at no-load		45' - 60'
13 Average backlash at 0,1 Nm		--
14 Radial play	µm	7
15 Axial play	µm	19
16 Max. recom. input speed	rpm	40'000
17 Operating temperature range	°C (°F)	0...155 (+32...+311)

© Portescap

Specifications subject to change without prior notice

EBS-485 SI

BLDC drive circuit

Driver for brushless, sensorless DC motors

- **Commutation control through back-EMF detection**
- **Phase current 5 A continuous, adjustable current limitation**
- **Digital PID speed regulation 2000 to 40000 rpm**
- **Compact size 100 x 90 x 25mm**
- **Single DC supply voltage 24V up to 48V**
- **Analogue motor current output Imot, 1V/A**
- **Colour-coded clamp type connector**
- **Digital tacho output, 6 pulses per revolution**

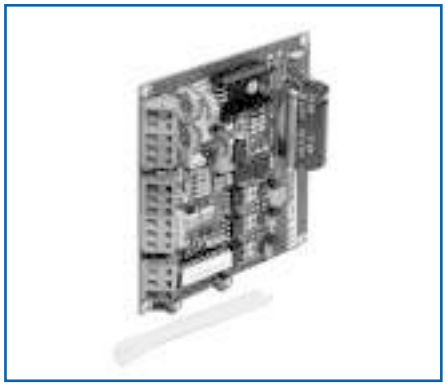

Specifications

1	Power supply voltage Vcc	24...48V DC
2	Max. continuous current	5A adjustable by resistor R4
3	Control inputs:	pull-up to 5V on board
	Enable	to supply the motor
	Direction	direction selection
	Brake	fast motor brake
4	Analogue input:	
	Speed reference	range 0.5V...10V*
5	Digital output:	0...5V with internal pull-up
	Tacho	digital speed information
		6 pulses per turn $n_{rpm} = 10 \times f_{Tacho(Hz)}$
6	Analogue output:	
	I_{mot}	indication of motor phase current, transconductance gain 1V/A
	Current limitation	by inserting a resistor R4**
7	Speed loop:	
	Range	2'000...40'000 rpm, 0.5V<speed ref.<10V
	Speed loop optimisation	load inertia, $J_{mot} < J_{load} < 5 \times J_{mot}$
	Ramping time	1s full scale 0...10V with no load
	Speed accuracy	≤ 5%
8	Connector	colour-coded cage clamp (clamping tool is supplied)

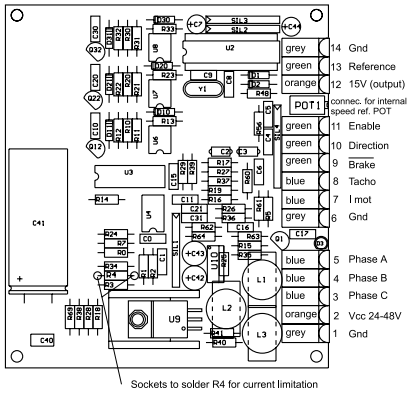

BL5010

BLDC drive circuit

Driver for brushless motor with Hall sensors

- **2 quadrant amplifier operating in open loop or closed velocity loop**
- **Single DC supply voltage, 12V to 50V**
- **maximum continuous current 10 A**
- **Hall sensor spacing select. 60°/120°**
- **Compact size**

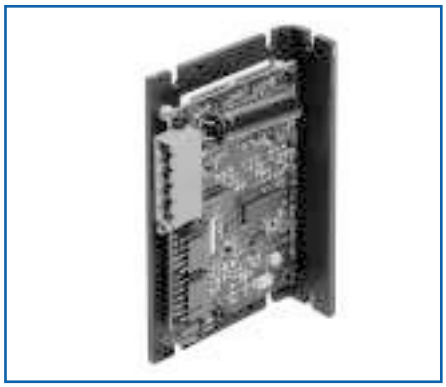

Specifications

1	Power supply voltage	12V to 50 V_{DC}
2	Continuous current	10 A max. with heatsink
3	Auxiliary output voltage	6.25 V-30 mA / 15 V-50 mA
4	Chopper frequency	15 kHz
5	Inputs (pull-up +6.25V)	Stop, Enable, Direction
6	Speed reference	0 V to 6.25 V
7	Selection mode	open loop or velocity loop by jumper
8	Protection	overcurrent / -temperature
9	Max. heatsink temperature	80°C

Connector	Motor lead	PIN	Name
J1	Red	1	Hall S. PWR lead
	Black	2	Hall S. GND lead
	Yellow	3	Hall S1
	Orange	4	Hall S2
	White	5	Hall S3
J2	Red	1	Power +
	Black	2	Ground -
	Blue	3	Phase A
	Brown	4	Phase B
	Violet	5	Phase C
J3	POT-GND	1	Signal GND
	Stop=low	2	Enable
	CW=Low	3	Direction
	POT wiper	4	Analog IN
P	OT +6V	5	+6.25 V
	No connect.	6	+ 15 V
60°/120°		-	Open
	Default	-	Closed
CV	Default	-	Open
		-	Closed

© Portescap

Gearbox Data Sheet section

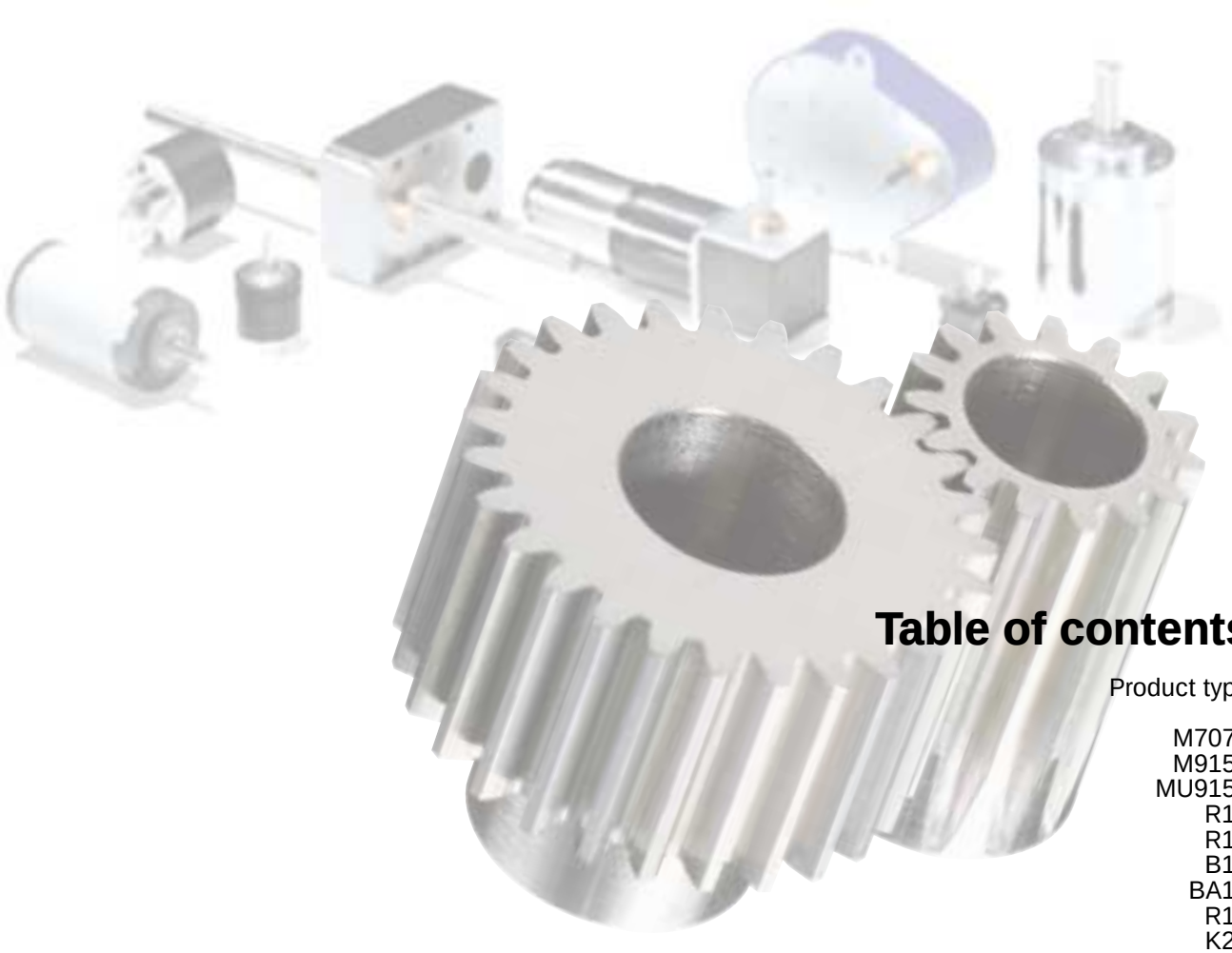

Table of contents

Product type	page
M707L	116
M915L	117
MU915L	117
R10	118
R13	119
B16	120
BA16	121
R16	122
K20	123
R22	124
M22	125
K24	126
K27	127
R32	128
K38	129
RG1/8	130
RG1/9	131
K40	132
R40	133
L10	134

© Portescap

escap M707 L 61

Reduction gearbox with spur gears

Gearmotor
0.012 Nm

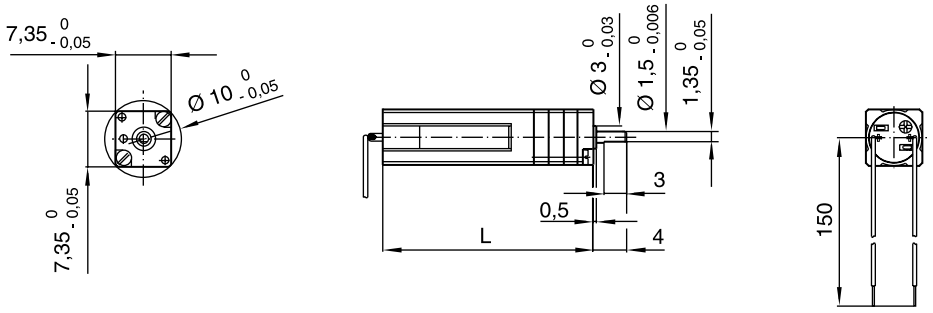

scale 1:1
dimensions in mm

M707 L 61 - •••• - •••• • 0

Gearbox specifications

Ratio ••••	7.07	10.7	19.6	29.8	54.6	82.7	152	230	421	638	1170	1770
No. of gear stages	2	2	3	3	4	4	5	5	6	6	7	7
Direction of rotation	=	=	≠	≠	=	=	≠	≠	=	=	≠	≠
1 Efficiency	0.8	0.8	0.75	0.75	0.65	0.65	0.6	0.6	0.55	0.55	0.5	0.5
2 Length = L (mm)	23.8	23.8	25.8	25.8	27.8	27.8	29.8	29.8	31.8	31.8	33.8	33.8
3 Mass (g)	4.3	4.3	4.4	4.4	4.6	4.6	4.7	4.7	4.9	4.9	5.0	5.0
4 Max. recom. dynamic output torque	mNm (oz-in)					12 (1.7) at 20 rpm						
	mNm (oz-in)					8 (1.1) at 150 rpm						
5 Bearing type						sleeve bearings						
6 Max. static torque	mNm (oz-in)					50 (7.08)						
7 Max. side load at 3 mm from mount. face	N (lb)					1 (0.225)						
8 Max. axial load	N (lb)					1 (0.225)						
9 Max. force for press-fit	N (lb)					5 (1.12)						
10 Average backlash at no-load						2°						
11 Average backlash at 12 mNm						3°						
12 Radial play	µm					≤ 30						
13 Axial play	µm					≤ 100						
14 Max. recom. input speed.	rpm					7500						
15 Temperature range	°C (°F)					-30 ... +65 (-22...+150)						

Availability: see document at the end of the catalogue

Motor specifications

Winding types ••••	-207	-205	-204
Measured values			
1 Measuring voltage V	2	3.5	4.5
2 No-load speed rpm	10400	11400	11700
3 Stall torque mNm (oz-in)	0.31 (0.04)	0.37 (0.05)	0.23 (0.03)
4 Average no-load current mA	12	8	6
5 Typical starting voltage V	0.2	0.3	0.5
Max. recommended values			
6 Max. continuous current A	0.28	0.18	0.11
7 Max. continuous torque mNm (oz-in)	0.46 (0.07)	0.48 (0.07)	0.36 (0.05)
Intrinsic parameters			
8 Torque constant mNm/A (oz-in/A)	1.7 (0.24)	2.8 (0.39)	3.3 (0.47)
9 Terminal resistance ohm	11	26	65
10 Motor regulation R/k^2 10^3/Nms	3700	3400	5800
11 Terminal inductance mH	0.03	0.10	0.11
12 Rotor inertia $kgm^2 . 10^{-7}$	0.022	0.030	0.016
Thermal parameters			
13 Mechanical time constant ms	8	10	9
14 Thermal time constant rotor s	3	3	3
15 Thermal resistance body-ambient °C/W	70	70	70

© Portescap

Specifications subject to change without prior notice

escap M915 L61 & MU915 L61

Reduction gearbox with spur gears

Gearmotor 0.03 Nm

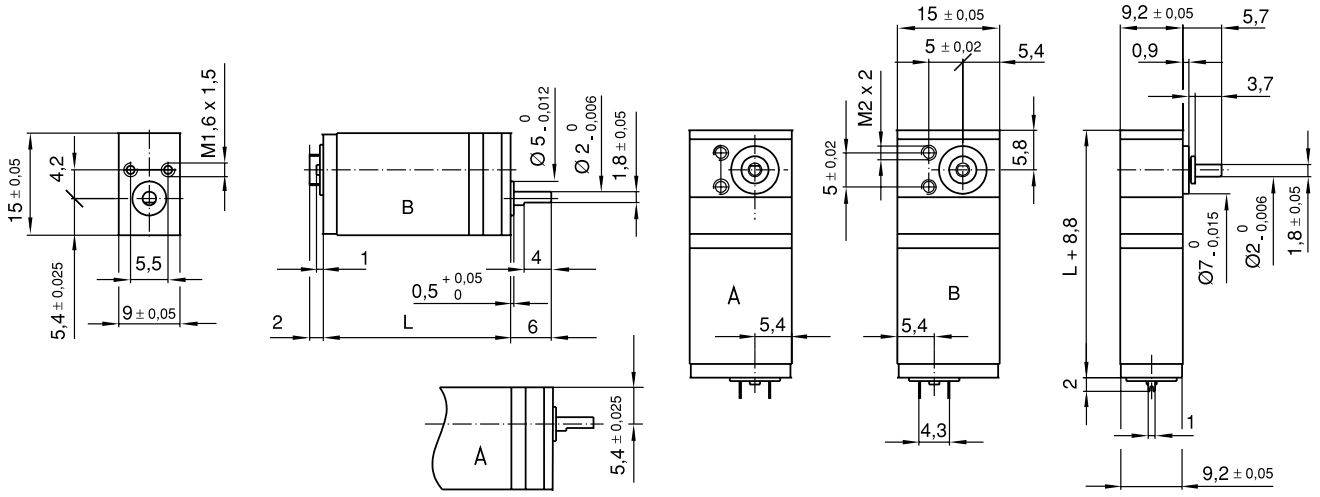

scale 1:1
dimensions in mm

M915 L61 - •••• - •••• • 40

MU915 L61 - •••• - •••• • 40

Gearbox specifications

Ratio ••••	3.67	13.4	26.8	49.3	98.7	181	362	663	1330	2430
No. of gear stages	1	2	3	3	4	4	5	5	6	6
Direction of rotation	≠	=	≠	≠	=	=	≠	≠	=	=
1 Efficiency	0.9	0.8	0.7	0.7	0.65	0.65	0.6	0.6	0.55	0.55
2 Length = L (mm)	21.2	23.30	26	26	28.7	28.7	31.4	31.4	34.1	34.1
3 Mass (g) / view	10/B	10/A	11/B	11/B	12/A	12/A	13/B	13/B	13/A	13/A
4 Max. recom. dynamic output torque	mNm (oz-in)					30 (4.25) at 20 rpm				
	mNm (oz-in)					20 (2.83) at 150 rpm				
5 Bearing type						sleeve bearings				
6 Max. static torque	mNm (oz-in)					70 (9.87)				
7 Max. side load at 3 mm from mount. face	N (lb)					1.5 (0.34)				
8 Max. axial load	N (lb)					1 (0.225)				
9 Max. force for press-fit	N (lb)					5 (1.12)				
10 Average backlash at no-load						2°				
11 Average backlash at 12 mNm						3°				
12 Radial play	µm					≤ 30				
13 Axial play	µm					≤ 150				
14 Max. recom. input speed.	rpm					7500				
15 Temperature range	°C (°F)					-20 ... +65 (-4...+150)				

Availability: see document at the end of the catalogue

Motor specifications

Winding types ••••		-208	-205
Measured values			
1 Measuring voltage	V	2	3
2 No-load speed	rpm	8300	8000
3 Stall torque	mNm (oz-in)	0.52 (0.07)	0.35 (0.05)
4 Average no-load current	mA	8	6
Max. recommended values			
6 Max. continuous current	A	0.28	0.16
7 Max. continuous torque	mNm (oz-in)	0.59 (0.08)	0.50 (0.07)
Intrinsic parameters			
8 Torque constant	mNm/A (oz-in/A)	2.2 (0.31)	3.2 (0.46)
9 Terminal resistance	ohm	8.5	26
10 Motor regulation R/k^2	10^3/Nms	1760	2540
11 Terminal inductance	mH	0.05	0.10
12 Rotor inertia	$kgm^2 . 10^{-7}$	0.04	0.03
Thermal parameters			
13 Mechanical time constant	ms	7	7
14 Thermal time constant rotor	s	3	3
15 Thermal resistance body-ambient	°C/W	60	60

© Portescap

Specifications subject to change without prior notice

escap R10
Planetary gearbox

Gearbox 0.10 Nm

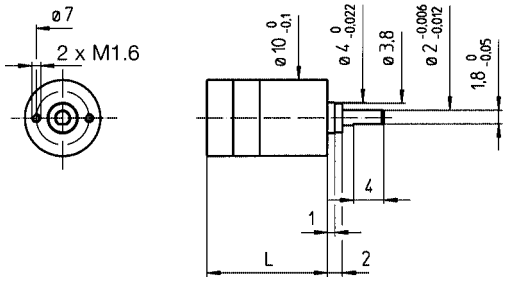

scale 1:1
dimensions in mm

R10 • 0 ••••

Ratio ••••	4	16	64	256	1024	4096
1 No. of gear stages	1	2	3	4	5	6
2 Dir. of rotation	=	=	=	=	=	=
3 Efficiency	0.9	0.8	0.7	0.65	0.6	0.5
4 L1 (mm)	9	12.5	16	19.5	23	26.5
5 Mass (g)	3	4	5	6	7	8
6 Available with motor	L2- length with motor (mm)					
08 G61 • 1	28.6	32.1	35.6	39.1	42.6	46.1
08 GS61 • 1	25.6	29.1	32.6	36.1	39.6	43.1
P010 • 02	25.4	28.9	32.4	35.9	39.9	42.9

Motor + gearbox = L2

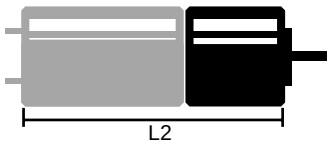

Characteristics

		R10 • 0
7 Bearing type		sleeve bearings
8 Max. static torque	Nm (oz-in)	0.15 (21.4)
9 Max. radial force at 8 mm from mounting face	N (lb)	2 (0.45)
10 Max. axial force	N (lb)	5 (1.125)
11 Force for press-fit	N (lb)	10 (2.25)
12 Average backlash at no-load		1°
13 Average backlash at 0.1 Nm		3°
14 Radial play	µm	≤ 50
15 Axial play	µm	50 -150
16 Max. recom. input speed	rpm	10000
17 Operating temperature range	°C (°F)	-30 ... +65 (-22...+150)

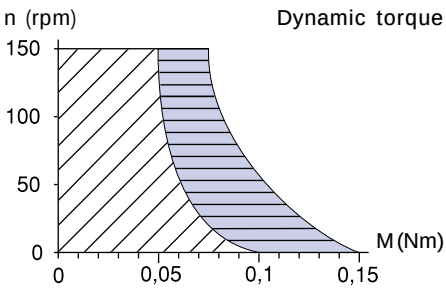

© Portescap

Specifications subject to change without prior notice

escap R13
Planetary gearbox

Gearbox 0.25 Nm

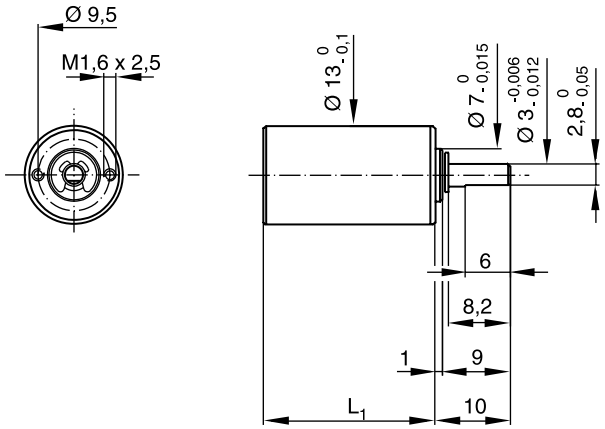

scale 1:1
dimensions in mm

R13 • 0 ••••

Ratio ••••	5.5	22	30.2	88	121	166	352	484	665.5	915
1 No. of gear stages	1	2	2	3	3	3	4	4	4	4
2 Dir. of rotation	=	=	=	=	=	=	=	=	=	=
3 Efficiency	0.85	0.75	0.75	0.65	0.65	0.65	0.55	0.55	0.55	0.55
4 L1 (mm)	14.5	18.6	18.6	22.7	22.7	22.7	26.8	26.8	26.8	26.8
5 Mass (g)	6	9	9	12	12	12	15	15	15	15
6 Available with motor	L2- length with motor (mm)									
13N88 • 1 / • 3	43.1	47.2	47.2	51.3	51.3	51.3	55.4	55.4	55.4	55.4

Availability: see enclosed document at the end of the catalogue

Motor + gearbox = L2

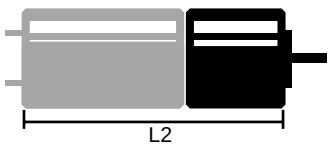

Characteristics

		R13 • 0	R13 2R • 0
7 Bearing type		sleeve	ball
8 Max. static torque	Nm (oz-in)	0.5 (71)	0.5 (71)
9 Max. radial force at 8 mm from mounting face	N (lb)	5 (1.12)	20 (4.5)
10 Max. axial force	N (lb)	8 (1.8)	10 (2.2)
11 Force for press-fit	N (lb)	300 (23)	100 (23)
12 Average backlash at no-load		1.25°	1.25°
13 Average backlash at 0.25 Nm		2°	2°
14 Radial play	µm	≤ 20	≤ 10
15 Axial play	µm	50 -150	≤ 50
16 Max. recom. input speed	rpm	7500	7500
17 Operating temperature range	°C (°F)	-30 ... +85 (-22...+185)	

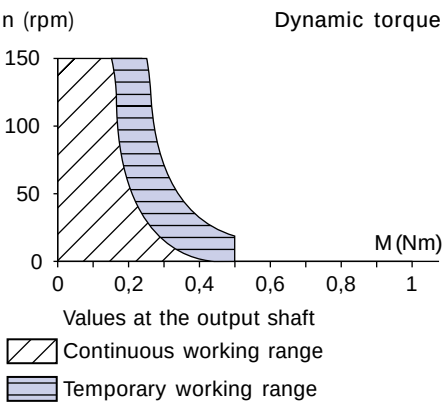

© Portescap

Specifications subject to change without prior notice

escap B16

Reduction gearbox with spur gears

Gearbox 0.12 Nm

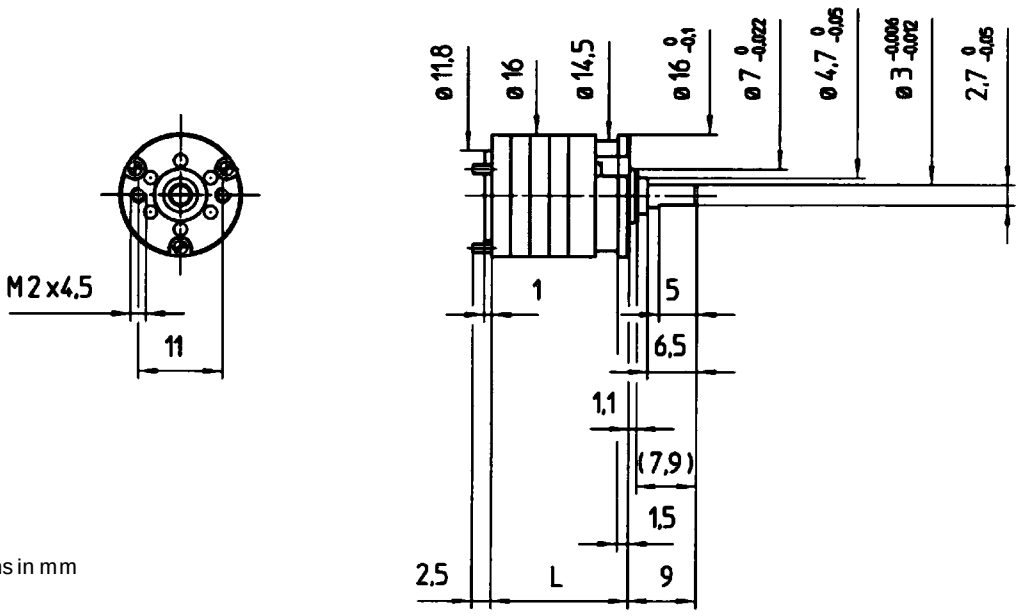

scale 1:1
dimensions in mm

B16 • 0 ••••

Ratio ••••	5	9	15	27	45	81	135	141	243	405	729	1215	2187
1 No. of gear stages	2	2	3	3	4	4	5	5	5	6	6	7	7
2 Dir. of rotation	=	=	≠	≠	=	=	≠	≠	≠	=	=	≠	≠
3 Efficiency	0.81	0.81	0.73	0.73	0.65	0.65	0.59	0.59	0.59	0.53	0.53	0.48	0.48
4 L1 (mm)	13.5	13.5	16	16	18.5	18.5	21	21	21	23.5	23.5	26	26
5 Mass (g)	7	7	8	8	9	9	10	10	10	11	11	12	12
6 Available with motor	L2- length with motor (mm)												
16C18 • 67	31.2	31.2	33.7	33.7	36.2	36.2	38.7	38.7	38.7	41.2	41.2	43.7	43.7
16N28 • 235	37.7	37.7	40.2	40.2	42.7	42.7	45.2	45.2	45.2	47.7	47.7	50.2	50.2
P110 • 8	32.5	32.5	35	35	37.5	37.5	40	40	40	42.5	42.5	45	45

Also available: 17S78 • 5 / 17N78 • 5 / 16G88 • 1

Availability: see enclosed document at the end of the catalogue

This gearbox is also available with a built-in clutch.

Motor + gearbox = L2

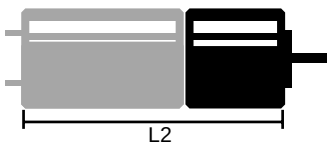

Characteristics

			B16 • 0	B16 2R • 0
7	Bearing type		sleeve bearings	ball bearings
8	Max. static torque	Nm(oz-in)	0.4 (56)	0.4 (56)
9	Max. radial force at 8 mm from mounting face	N (lb)	5 (1.1)	10 (2.2)
10	Max. axial force	N (lb)	5 (1.1)	10 (2.2)
11	Force for press-fit	N (lb)	100 (23)	100 (23)
12	Average backlash at no-load		1.5°	1.5°
13	Average backlash at 0,1 Nm		3°	3°
14	Radial play	µm	≤ 20	≤ 10
15	Axial play	µm	50 ... 150	≤ 100
16	Max. recom. input speed	rpm	8000	8000
17	Operating temperature range	°C (°F)	-30 ... +65 (-22...+150)	

n (rpm) Dynamic torque

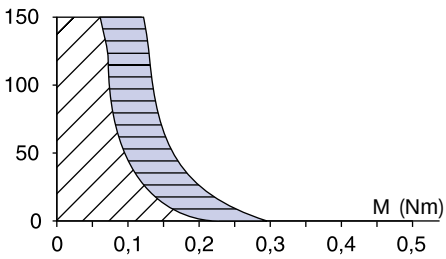

Values at the output shaft
Continuous working range
Temporary working range

© Portescap

Specifications subject to change without prior notice

escap BA16

Reduction gearbox with spur gears and planetary output gear stage

Gearbox 0.2 Nm

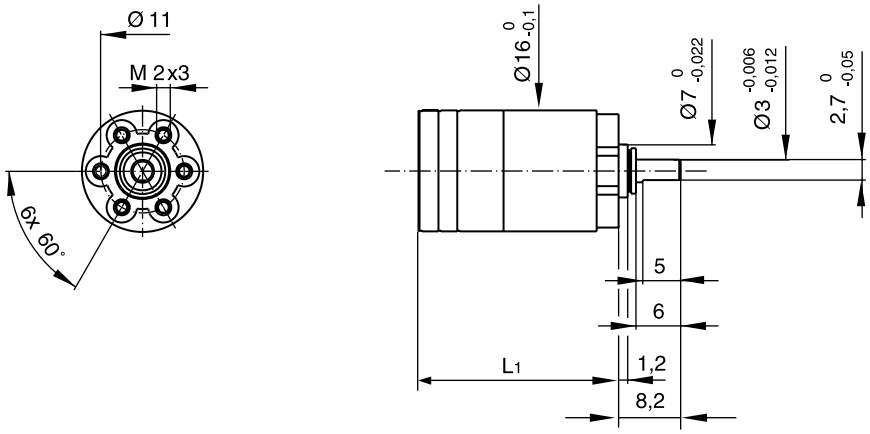

scale 1:1
dimensions in mm

BA16 • 0 ••••

Ratio[1]	••••	22.5	40.5	67.5	121.5	202.5	243	364.5	607.5	1093.5	1822.5	3280.5
1 No. of gear stages		3	3	4	4	5	5	5	6	6	7	7
2 Dir. of rotation		=	=	≠	≠	=	=	=	≠	≠	=	=
3 Efficiency		0.72	0.72	0.65	0.65	0.59	0.59	0.59	0.53	0.53	0.48	0.48
4 L1 (mm)		26.7	26.7	29.2	29.2	31.7	31.7	31.7	34.2	34.2	36.7	36.7
5 Mass (g)		12	12	13	13	14	14	14	15	15	16	16
6 Available with motor		L2- length with motor (mm)										
16C18 • 67		44.4	44.4	46.9	46.9	49.4	49.4	49.4	51.9	51.9	54.4	54.4
16N28 • 235		50.9	50.9	53.4	53.4	55.9	55.9	55.9	58.4	58.4	60.9	60.9
17N78 • 5		52.1	52.1	54.6	54.6	57.1	57.1	57.1	59.6	59.6	62.1	62.1
P110 • 8		45.7	45.7	48.2	48.2	50.7	50.7	50.7	53.2	53.2	55.7	55.7

Also available: 17S78 • 5 / 18G88 • 5

Availability: see enclosed document at the end of the catalogue

1) ratios 5467 and 9841 available on request

Motor + gearbox = L2

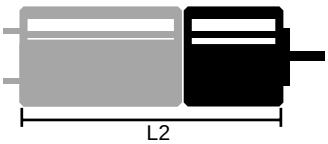

Characteristics

			BA16 • 0	BA16 2R • 0
7	Bearing type		sleeve bearings	ball bearings
8	Max. static torque	Nm (oz-in)	0.4 (57)	0.4 (57)
9	Max. radial force at 5 mm from mounting face	N (lb)	5 (1.1)	15 (3.3)
10	Max. axial force	N (lb)	5 (1.1)	10 (2.2)
11	Force for press-fit	N (lb)	200 (44)	200 (44)
12	Average backlash at no-load		1.5°	1.5°
13	Average backlash at 0,1 Nm		3°	3°
14	Radial play	µm	≤ 30	≤ 10
15	Axial play	µm	≤ 150	≤ 100
16	Max. recom. input speed	rpm	8000	8000
17	Operating temperature range	°C (°F)	-30 ... +65 (-22...+150)	

n (rpm) — Dynamic torque

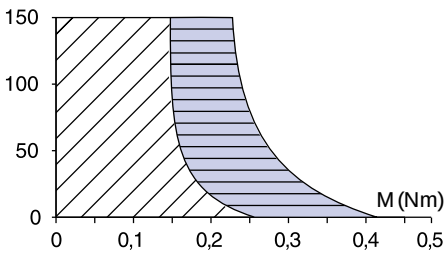

Values at the output shaft

Temporary working range

© Portescap

Specifications subject to change without prior notice

escap R16
Planetary gearbox

Gearbox 0.3 Nm

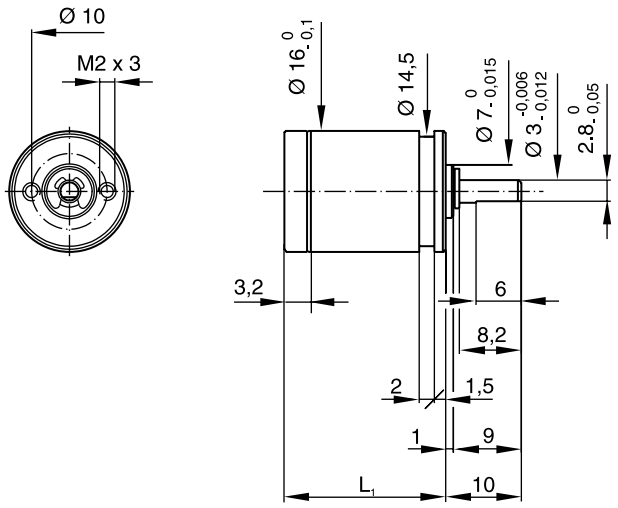

scale 1:1
dimensions in mm

R16 • 0 ••••

Ratio ••••	5.5	22	30.2	88	121	166	352	484	665.5	915
1 No. of gear stages	1	2	2	3	3	3	4	4	4	4
2 Dir. of rotation	=	=	=	=	=	=	=	=	=	=
3 Efficiency	0.85	0.75	0.75	0.65	0.65	0.65	0.55	0.55	0.55	0.55
4 L1 (mm)	16	20.1	20.1	24.2	24.2	24.2	28.3	28.3	28.3	28.3
5 Mass (g)	10	13	13	16	16	16	19	19	19	19
6 Available with motor	L2- length with motor (mm)									
16N28 • 201	44	48.1	48.1	52.2	52.2	52.2	56.3	56.3	56.4	56.3
17S78 • 1	34	38.8	38.8	42.9	42.9	42.9	47	47	47.1	47
17N78 • 1	41.9	46	46	50.1	50.1	50.1	54.2	54.2	54.3	54.2
P110 • 12	35	39.1	39.1	43.2	43.2	43.2	47.3	47.3	47.4	47.3

Also available: 16N38 • 213 / 17S88 • 2 / 17N88 • 4 / 16C18 • 30 / 16G88 • 1

Availability: see enclosed document at the end of the catalogue

Motor + gearbox = L2

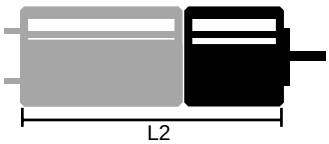

Characteristics

			R16 • 0	R16 2R • 0
7	Bearing type		sleeve bearings	ball bearings
8	Max. static torque	Nm (oz-in)	1 (141)	1 (141)
9	Max. radial force at 8 mm from mounting face	N (lb)	5 (1.12)	20 (4.5)
10	Max. axial force	N (lb)	8 (1.8)	10 (2.2)
11	Force for press-fit	N (lb)	100 (23)	100 (23)
12	Average backlash at no-load		1.25°	1.25°
13	Average backlash at 0.3 Nm		2°	2°
14	Radial play	µm	≤ 20	≤ 10
15	Axial play	µm	50 -150	≤ 50
16	Max. recom. input speed	rpm	7500	7500
17	Operating temperature range	°C (°F)	-30 ... +85 (-22...+185)	

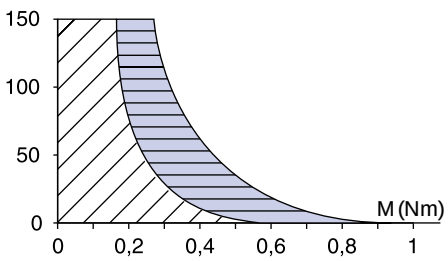

Values at the output shaft
Continuous working range
Temporary working range

© Portescap

Specifications subject to change without prior notice

escap K20

Reduction gearbox with spur gears

Gearbox 0.15 Nm

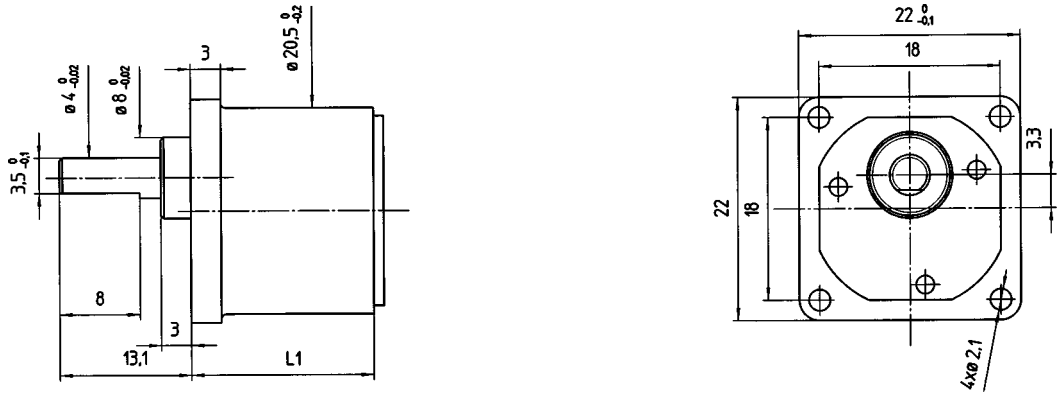

dimensions in mm

K20 • 0 ••••

Ratio ••••	8.3	16.6	25	50	75	150	375	675
1 No. of gear stages	2	3	3	4	4	5	6	6
2 Dir. of rotation	=	≠	≠	=	=	≠	=	=
3 Efficiency	0.85	0.85	0.75	0.75	0.75	0.75	0.65	0.65
4 L1 (mm)	11.40	13.12	13.12	14.80	14.80	16.45	18.11	18.11
5 Mass (g)	18.3	19.5	19.5	20.6	20.6	21.8	23	23.1
6 Available with motor	L2- length with motor (mm)							
22N28 • 286	47.8	49.52	49.52	51.2	51.2	52.85	54.51	54.51

Motor + gearbox = L2

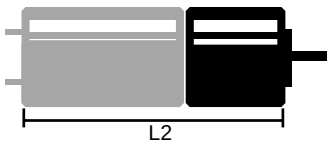

Characteristics		K20 • 0
7 Bearing type		sleeve bearings
8 Max. static torque	Nm (oz-in)	0.5 (71.45)
9 Max. radial force at 5 mm from mounting face	N (lb)	20 (4.5)
10 Max. axial force	N (lb)	10 (2.2)
11 Force for press-fit	N (lb)	30 (6.7)
12 Average backlash at no-load		1°
13 Average backlash at 0.15 Nm		1.5°
14 Radial play	µm	≤ 20
15 Axial play	µm	40 -150
16 Max. recom. input speed	rpm	5000
17 Operating temperature range	°C (°F)	-30 ... +85 (-22...+185)

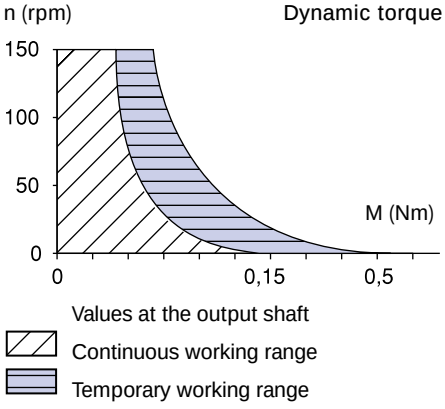

© Portescap

Specifications subject to change without prior notice

escap R22
Planetary gearbox

Gearbox 0.6 Nm

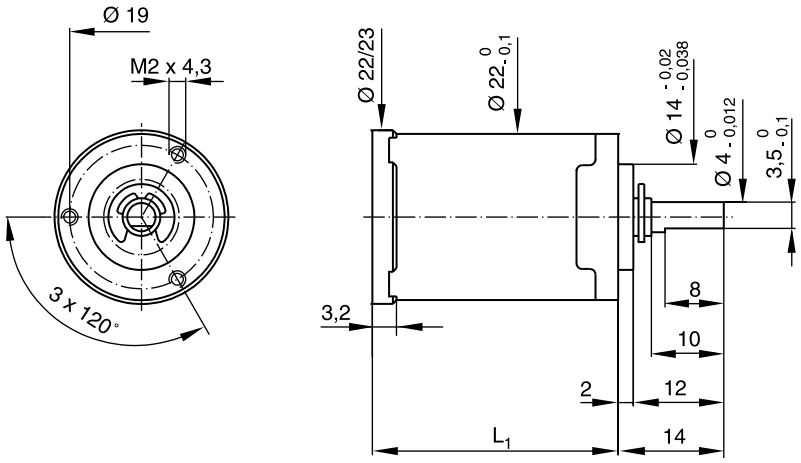

scale 1:1
dimensions in mm

R22 • 0 ••••

Ratio ••••	5.75	16.2	19.4	27.6	33.1	65.5	93.2	111	132	159	190	376	641	1090
1 No. of gear stages	1	2	2	2	2	3	3	3	3	3	3	4	4	4
2 Dir. of rotation	=	=	=	=	=	=	=	=	=	=	=	=	=	=
3 Efficiency	0.8	0.7	0.7	0.7	0.7	0.6	0.6	0.6	0.6	0.6	0.6	0.5	0.5	0.5
4 L1 (mm)	25	32.5	32.5	32.5	32.5	40	40	40	40	40	40	40	40	40
5 Mass (g)	20	25	25	25	25	30	30	30	30	30	30	33	33	33
6 Available with motor	L2- length with motor (mm)													
22S28 • 1	48.8	56.3	56.3	56.3	56.3	63.8	63.8	63.8	63.8	63.8	63.8	63.8	63.8	63.8
22N28 • 201	54.8	62.3	62.3	62.3	62.3	69.8	69.8	69.8	69.8	69.8	69.8	69.8	69.8	69.8
22V28 • 202	59.4	66.9	66.9	66.9	66.9	74.4	74.4	74.4	74.4	74.4	74.4	74.4	74.4	74.4
23LT12 • 45	62.1	69.6	69.6	69.6	69.6	77.1	77.1	77.1	77.1	77.1	77.1	77.1	77.1	77.1
23V58 • 4	73.8	81.3	81.3	81.3	81.3	88.8	88.8	88.8	88.8	88.8	88.8	88.8	88.8	88.8
23DT12 • 38 / • 93	75.5	83	83	83	83	90.5	90.5	90.5	90.5	90.5	90.5	90.5	90.5	90.5
26N58 • 5	68.3	75.8	75.8	75.8	75.8	83.3	83.3	83.3	83.3	83.3	83.3	83.3	83.3	83.3
28L28 • 164	68.5	76	76	76	76	83.5	83.5	83.5	83.5	83.5	83.5	83.5	83.5	83.5
28LT12 • 164	68.2	75.7	75.7	75.7	75.7	83.2	83.2	83.2	83.2	83.2	83.2	83.2	83.2	83.2
P310 • 09	46.7	54.2	54.2	54.2	54.2	61.7	61.7	61.7	61.7	61.7	61.7	61.7	61.7	61.7

Also available: 22N48 • 308 / 22V48 • 225 / 23V48 • 11 / 26N48 • 9 / 22HV48 • 2

Availability: see enclosed document at the end of the catalogue

Motor + gearbox = L2

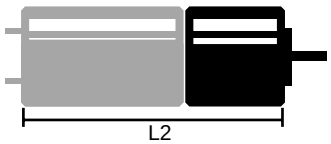

Characteristics

			R22 • 0	R22 2R • 0
7	Bearing type		sleeve bearings	ball bearings
8	Max. static torque	Nm (oz-in)	2 (283)	2 (283)
9	Max. radial force at 8 mm from mounting face	N (lb)	10 (2.2)	15 (3.3)
10	Max. axial force	N (lb)	10 (2.2)	10 (2.2)
11	Force for press-fit	N (lb)	300 (67.4)	300 (67.4)
12	Average backlash at no-load		1.5°	1.5°
13	Average backlash at 0,3 Nm		3°	3°
14	Radial play	µm	≤ 25	≤ 10
15	Axial play	µm	50 -150	50 -150
16	Max. recom. input speed	rpm	5000	5000
17	Operating temperature range	°C (°F)	-30 ... +65 (-22...+150)	

n (rpm) Dynamic torque

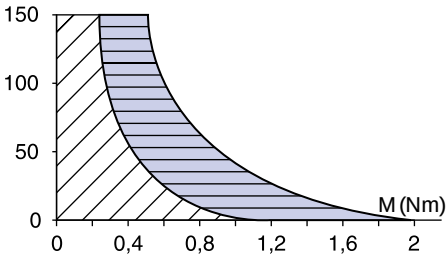

Values at the output shaft
Continuous working range
Temporary working range

© Portescap

Specifications subject to change without prior notice

escap M22
Planetary gearbox

Gearbox 1.5 Nm

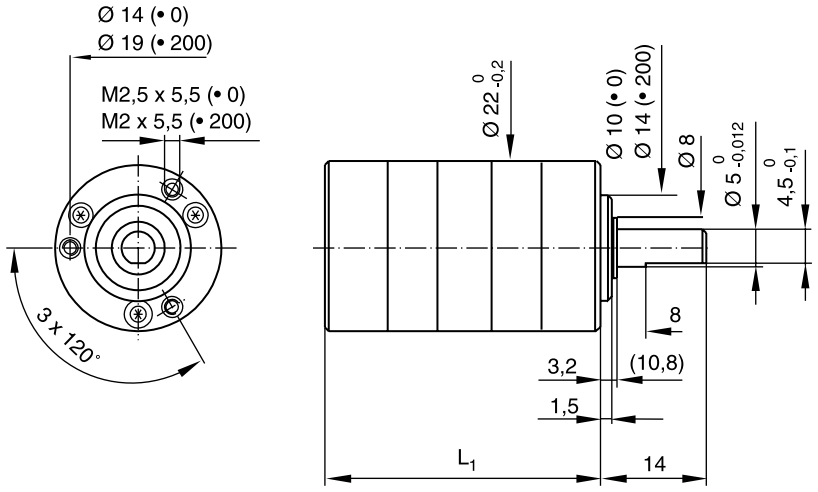

scale 1:1
dimensions in mm

M22 • 0 •••• M22 • 200 ••••

Ratio[1] ••••	3.67	5	13.4	18.3	25	49.3	67.2	91.7	125	180.8	246.5	336.1	458.3	625	903.8
1 No. of gear stages	1	1	2	2	2	3	3	3	3	4	4	4	4	4	5
2 Dir. of rotation	=	=	=	=	=	=	=	=	=	=	=	=	=	=	=
3 Efficiency	0.8	0.8	0.7	0.7	0.7	0.6	0.6	0.6	0.6	0.55	0.55	0.55	0.55	0.55	0.5
4 L1 (mm)	22.6	22.6	29.5	29.5	29.5	36.4	36.4	36.4	36.4	43.3	43.3	43.3	43.3	43.3	50.2
5 Mass (g)	26	26	33	33	33	40	40	40	40	47	47	47	47	47	54
6 Available with motor	L2- length with motor (mm)														
22N28 • 286	54.6	54.6	61.5	61.5	61.5	68.4	68.4	68.4	68.4	75.3	75.3	75.3	75.3	75.3	82.2
22V28 • 201	57	57	63.9	63.9	63.9	70.8	70.8	70.8	70.8	77.7	77.7	77.7	77.7	77.7	84.6
23LT12 • 45	59.7	59.7	66.6	66.6	66.6	73.5	73.5	73.5	73.5	80.4	80.4	80.4	80.4	80.4	87.3
23V58 • 4	71.4	71.4	78.3	78.3	78.3	85.2	85.2	85.2	85.2	92.1	92.1	92.1	92.1	-	-
23DT12 • 38 / • 93	73.1	73.1	80	80	80	86.9	86.9	86.9	86.9	93.8	93.8	93.8	93.8	-	-
26N58 • 5	65.9	65.9	72.8	72.8	72.8	79.7	79.7	79.7	79.7	86.6	86.6	86.6	86.6	-	
28L28 • 164	66.1	66.1	73	73	73	79.9	79.9	79.9	79.9	86.8	86.8	86.8	86.8	-	-
28LT12 • 164	65.8	65.8	72.7	72.7	72.7	79.6	79.6	79.6	79.6	86.5	86.5	86.5	-	-	-
22BC	44.3	44.3	51.2	51.2	51.2	58.1	58.1	58.1	58.1	65	65	65	65	65	71.9

Also available: 22N48 • 308 / 22V48 • 204 / 23V48 • 11 / 26N48 • 9

Availability: see enclosed document at the end of the catalogue

1) ratios 1232, 1680, 2292, 3125, available on request

Motor + gearbox = L2

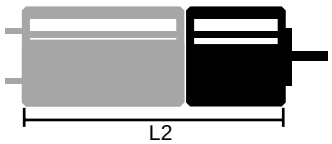

Characteristics M22 • 0 / • 200

7	Bearing type		sleeve bearings
8	Max. static torque	Nm (oz-in)	4 (556)
9	Max. radial force at 8 mm from mounting face	N (lb)	50 (11)
10	Max. axial force	N (lb)	70 (16)
11	Force for press-fit	N (lb)	100 (22)
12	Average backlash at no-load		2°
13	Average backlash at 1 Nm		3°
14	Radial play	µm	< 200
15	Axial play	µm	50 -150
16	Max. recom. input speed	rpm	7500
17	Operating temperature range	°C (°F)	-30 ... +65(-22...+150)

n (rpm) Dynamic torque

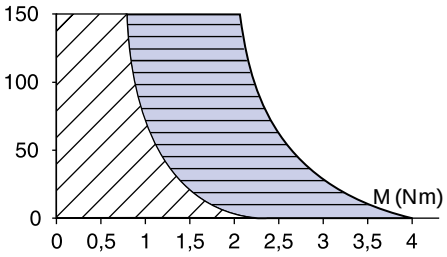

Values at the output shaft
Continuous working range
Temporary working range

© Portescap

Specifications subject to change without prior notice

escap K24

Reduction gearbox with spur gears

Gearbox 0.17 Nm

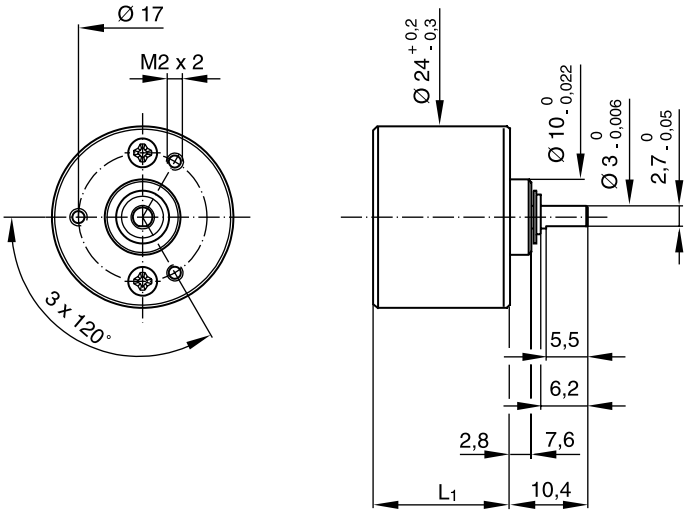

scale 1:1
dimensions in mm

K24 • 0 ••••

Ratio ••••	5	8	20	32	64	128	320	800	2048
1 No. of gear stages	2	2	4	4	4	4	6	6	6
2 Dir. of rotation	=	=	=	=	=	=	=	=	=
3 Efficiency	0.85	0.85	0.75	0.75	0.75	0.75	0.65	0.65	0.65
4 L1 (mm)	15	15	18	18	18	18	21	21	21
5 Mass (g)	15	15	18	18	18	18	20	20	20
6 Available with motor	L2- length with motor (mm)								
22N28 • 286	47	47	50	50	50	50	53	53	53
22V28 • 202	49.4	49.4	52.4	52.4	52.4	52.4	55.4	55.4	55.4
23V58 • 4	63.8	63.8	66.8	66.8	66.8	66.8	69.8	69.8	69.8
26N58 • 5	58.3	58.3	61.3	61.3	61.3	61.3	64.3	64.3	64.3
P310 • 09	36.7	36.7	39.7	39.7	39.7	39.7	42.7	42.7	42.7

Also available: 22N48 • 308 / 22V48 • 225 / 23V48 • 11 / 26N48 • 9 / 23LT12 • 45 / 22HV48 • 2

Availability: see enclosed document at the end of the catalogue

Motor + gearbox = L2

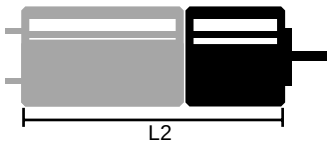

Characteristics

		K24 • 0	K24 2R • 0
7 Bearing type		sleeve bearings	ball bearings
8 Max. static torque	Nm (oz-in)	0.7 (100)	0.7 (100)
9 Max. radial force at 8 mm from mounting face	N (lb)	5 (1.1)	20 (4.5)
10 Max. axial force	N (lb)	8 (1.8)	10 (2.2)
11 Force for press-fit	N (lb)	30 (6.7)	30 (6.7)
12 Average backlash at no-load		1.5°	1.5°
13 Average backlash at 0,12 Nm		2.5°	2.5°
14 Radial play	µm	≤ 40	≤ 10
15 Axial play	µm	50 -150	≤ 10
16 Max. recom. input speed	rpm	5000	5000
17 Operating temperature range	°C (°F)	-30 ... +65 (-22...+150)	

n (rpm) Dynamic torque

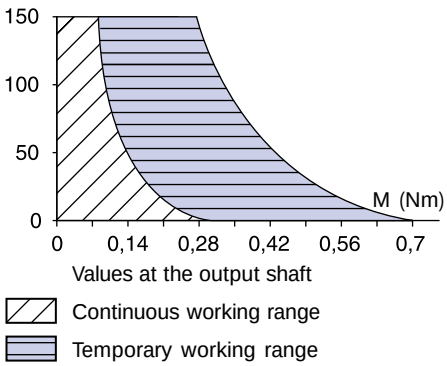

© Portescap

Specifications subject to change without prior notice

escap K27

Reduction gearbox with spur gears

Gearbox 0.4 Nm

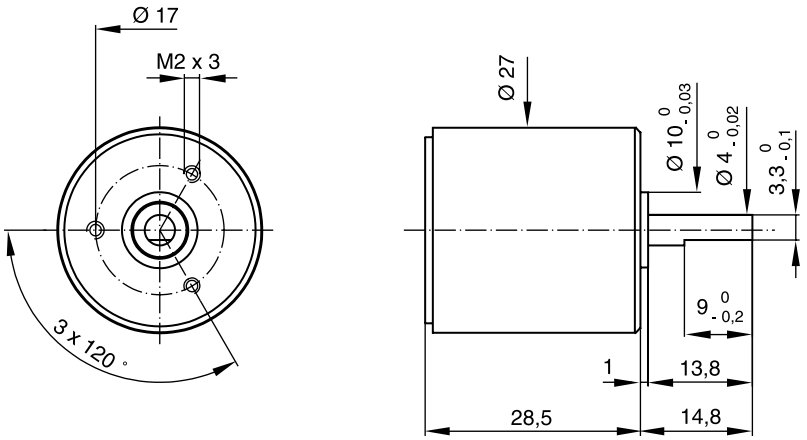

scale 1:1
dimensions in mm

K27 • 0 ••••

Ratio ••••

	6.2	18.6	27.9	55.7	99.1	198	501	979	2970
1 No. of gear stages	4	4	4	4	6	6	6	6	9
2 Dir. of rotation	=	=	=	=	=	=	=	=	≠
3 Efficiency	0.65	0.65	0.65	0.65	0.55	0.55	0.55	0.55	0.4
4 L1 (mm)	28.5	28.5	28.5	28.5	28.5	28.5	28.5	28.5	28.5
5 Mass (g)	40	40	40	40	42	42	42	42	48
6 Available with motor	L2- length with motor (mm)								
22N28 • 286	60.5	60.5	60.5	60.5	60.5	60.5	60.5	60.5	60.5
22V28 • 202	62.9	62.9	62.9	62.9	62.9	62.9	62.9	62.9	62.9
26N58 • 5	72	72	72	72	72	72	72	72	72
P310 • 09	50.2	50.2	50.2	50.2	50.2	50.2	50.2	50.2	50.2

Also available: 22N48 • 308 / 22V48 • 225 / 26N48 • 9 / 23V58 • 4 / 23V48 • 11 / 23LT12 • 45 / 22HV48 • 2

Availability: see enclosed document at the end of the catalogue

This gearbox is also available with a built-in clutch.

Motor + gearbox = L2

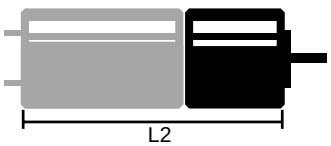

Characteristics

		K27 • 0	K27 2R • 0
7 Bearing type		sleeve bearings	ball bearings
8 Max. static torque	Nm (oz-in)	0.7 (100)	0.7 (100)
9 Max. radial force at 8 mm from mounting face	N (lb)	20 (4.5)	25 (5.5)
10 Max. axial force	N (lb)	8 (1.8)	40(9)
11 Force for press-fit	N (lb)	300 (67.5)	60 (13.5)
12 Average backlash at no-load		2°	2°
13 Average backlash at 0,2 Nm		3°	3°
14 Radial play	µm	≤ 60	≤ 20
15 Axial play	µm	50 -150	≤ 100
16 Max. recom. input speed	rpm	4000	4000
17 Operating temperature range	°C (°F)	-30 ... +65 (-22...+150)	

n (rpm) Dynamic torque

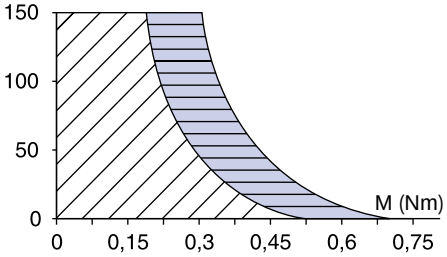

Values at the output shaft
Continuous working range
Temporary working range

© Portescap

Specifications subject to change without prior notice

escap R32
Planetary gearbox

Gearbox 4.5 Nm

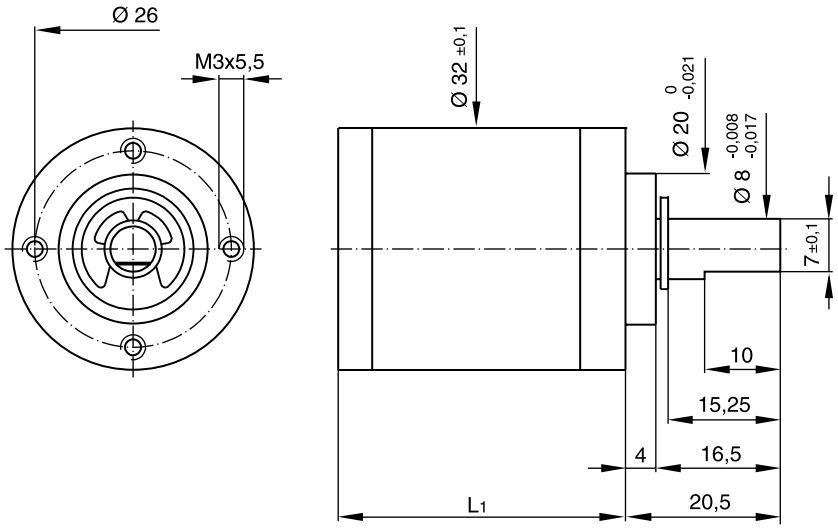

scale 1:1
dimensions in mm

R32 • 0 ••••

Ratio ••••	5.75	17.4	24	33	72.3	99.8	138	190	301	416	574	792	1090
Note for motor execution	1)	2)	2)	1)	2)	2)	2)	1)	2)	2)	2)	2)	1)
1 No. of gear stages	1	2	2	2	3	3	3	3	4	4	4	4	4
2 Dir. of rotation	=	=	=	=	=	=	=	=	=	=	=	=	=
3 Efficiency	0.8	0.75	0.75	0.75	0.65	0.65	0.65	0.65	0.55	0.55	0.55	0.55	0.55
4 L1 (mm)	32	38	38	38	44	44	44	44	50	50	50	50	50
5 Mass (g)	124	145	145	145	175	175	175	175	205	205	205	205	205
6 Available with motor	L2- length with motor (mm)												
28L28 • 49	75.5	81.5	81.5	81.5	87.5	87.5	87.5	87.5	93.5	93.5	93.5	93.5	93.5
28LT12 • 49	75.2	81.2	81.2	81.2	87.2	87.2	87.2	87.2	93.2	93.2	93.2	93.2	93.2
28D11 • 4	93.7	99.7	99.7	99.7	105.7	105.7	105.7	105.7	111.7	111.7	111.7	111.7	111.7
28DT12 • 4 / • 98[2)]	96.6	102.6	102.6	102.6	108.6	108.6	108.6	108.6	114.6	114.6	114.6	114.6	114.6
35NT2R32 • 1[2)] / • 54[1)] / • 50[2)]	94.9	100.9	100.9	100.9	106.9	106.9	106.9	106.9	112.9	112.9	112.9	112.9	112.9
35NT2R82 • 1[2)] / • 54[1)] / • 50[2)]	94.9	100.9	100.9	100.9	106.9	106.9	106.9	106.9	112.9	112.9	112.9	112.9	112.9

Also available: 26N58 • 1 / 26N48 • 6 / 34L11 • 1 / 35HNT2R82 • 1

Availability: see enclosed document at the end of the catalogue

Motor + gearbox = L2

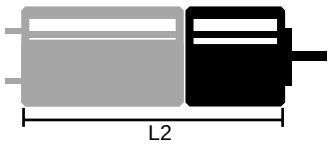

Characteristics

			R32 • 0
7	Bearing type		ball bearings
8	Max. static torque	Nm (oz-in)	20 (2832)
9	Max. radial force at 8 mm from mounting face	N (lb)	180 (40.5)
10	Max. axial force	N (lb)	150 (33.75)
11	Force for press-fit	N (lb)	500 (112.5)
12	Average backlash at no-load		1°
13	Average backlash at 3 Nm		2°
14	Radial play	µm	≤10
15	Axial play	µm	≤10
16	Max. recom. input speed	rpm	6000
17	Operating temperature range	°C (°F)	-30 ... +85 (-22...+185)

n (rpm) Dynamic torque

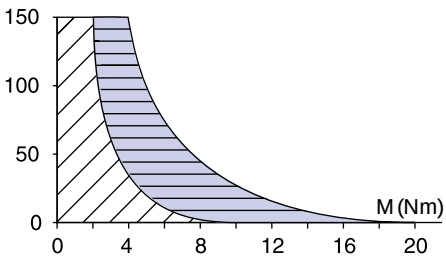

Values at the output shaft
Continuous working range
Temporary working range

© API Portescap

Specifications subject to change without prior notice

escap K38

Reduction gearbox with spur gears

Gearbox
1 Nm

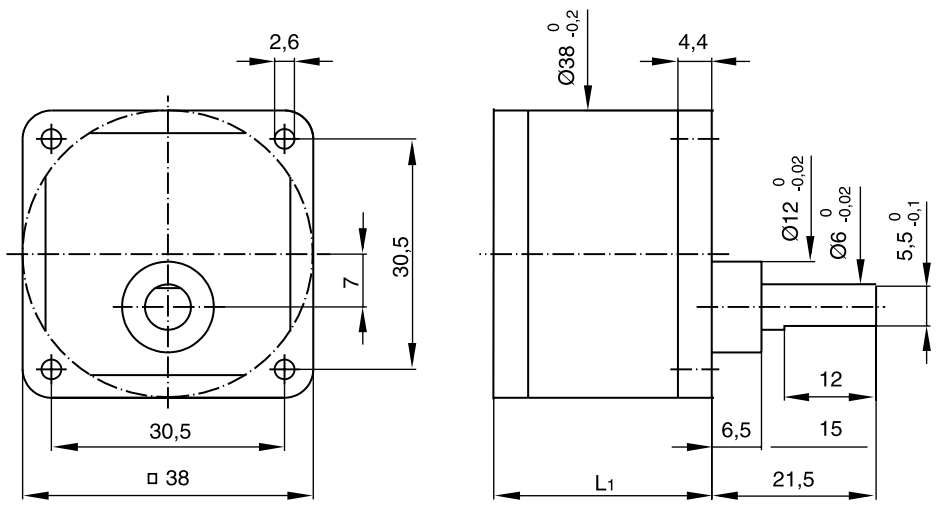

scale 1:1
dimensions in mm

K38 • 0 ••••

Ratio ••••	6	10	18	30	60	100	200	500	900
1 No. of gear stages	2	2	3	3	4	4	5	6	6
2 Dir. of rotation	=	=	≠	≠	=	=	≠	=	=
3 Efficiency	0.81	0.81	0.73	0.73	0.65	0.65	0.6	0.55	0.55
4 L1 (mm)	23.6	23.6	26.1	26.1	28.6	28.6	31.1	33.6	33.6
5 Mass (g)	55	55	60	60	65	65	70	75	75
6 Available with motor	L2- length with motor (mm)								
22V28 • 201	58	58	60.5	60.5	63	63	65.5	68	68
26N58 • 1	67.1	67.1	69.6	69.6	72.1	72.1	74.6	77.1	77.1
28L28 • 49	67.1	67.1	69.6	69.6	72.1	72.1	74.6	77.1	77.1
28LT12 • 49	66.8	66.8	69.3	69.3	71.8	71.8	74.3	76.8	76.8

Also available: 22V48 • 204 / 26N48 • 6 / 22N28 • 204 / 23LT12 • 1 / 23LT2R12 • 120 / 23V58 • 1 / 23V48 • 9 / 23DT12 • 1 / 23DT2R12 • 88 / 23HV48 • 1

Availability: see enclosed document at the end of the catalogue

Motor + gearbox = L2

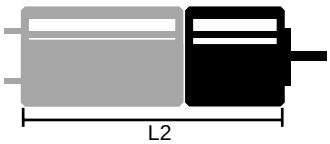

Characteristics

			K38 • 0	K38 2R • 0
7	Bearing type		sleeve bearings	ball bearings
8	Max. static torque	Nm (oz-in)	2 (255)	2 (255)
9	Max. radial force at 8 mm from mounting face	N (lb)	50 (11.25)	75 (17)
10	Max. axial force	N (lb)	30 (6.75)	30 (6.75)
11	Force for press-fit	N (lb)	500 (112.5)	500 (112.5)
12	Average backlash at no-load		1.7°	1.7°
13	Average backlash at 1 Nm		2.7°	2.7°
14	Radial play	µm	≤100	≤30
15	Axial play	µm	50 -250	≤ 200
16	Max. recom. input speed	rpm	5000	5000
17	Operating temperature range	°C (°F)	-30 ... +65 (-22...+150)	

Dynamic torque

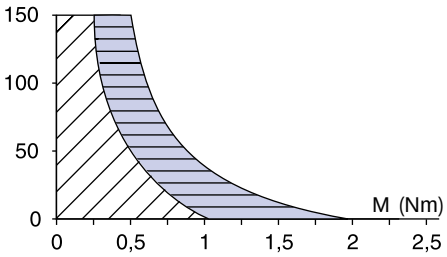

Values at the output shaft
Continuous working range
Temporary working range

© API Portescap

Specifications subject to change without prior notice

escap RG1/8

Reduction gearbox with spur gears

Gearbox 0.6 Nm

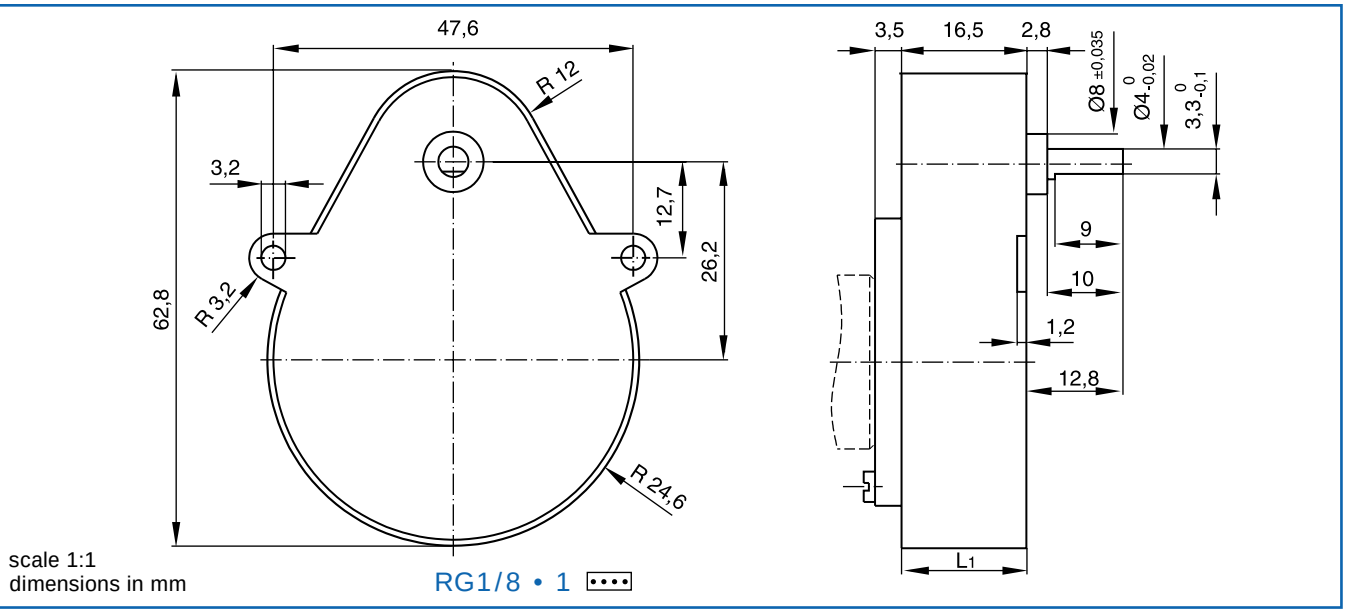

scale 1:1
dimensions in mm

RG1/8 • 1 ••••

Ratio ••••	5.5	12	24	48	96	150	480	750	1200	1920	3000
1 No. of gear stages	2	3	3	4	4	4	5	5	6	6	6
2 Dir. of rotation	=	≠	≠	=	=	=	≠	≠	=	=	=
3 Efficiency	0.8	0.7	0.7	0.65	0.65	0.65	0.6	0.6	0.55	0.55	0.55
4 L1 (mm)	16.5	16.5	16.5	16.5	16.5	16.5	16.5	16.5	16.5	16.5	16.5
5 Mass (g)	64	66	66	68	68	68	70	70	72	72	72
6 Available with motor	L2- length with motor (mm)										
22N28 • 204	52	52	52	52	52	52	52	52	52	52	52
22V28 • 201	54.4	54.4	54.4	54.4	54.4	54.4	54.4	54.4	54.4	54.4	54.4
23DT12 • 1	70.5	70.5	70.5	70.5	70.5	70.5	70.5	70.5	70.5	70.5	70.5
P310 • 09	35.2	35.2	35.2	35.2	35.2	35.2	35.2	35.2	35.2	35.2	35.2

Also available: 22V48 • 204 / 23DT2R12 • 88 / 23LT12 • 1 / 23LT2R12 • 120 / 23V58 • 1 / 23V48 • 9 / 26N58 • 1 / 26N48 • 6 / 28L28 • 49 / 28LT12 • 49 / 23HV48 • 1

Availability: see enclosed document at the end of the catalogue

This gearbox is also available with a built-in clutch.

Motor + gearbox = L2

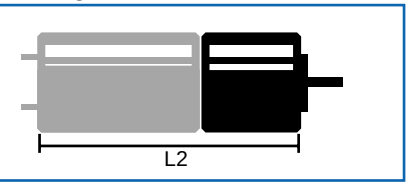

Characteristics

			RG1/8 • 1	RG1/8 2R • 1
7	Bearing type		sleeve bearings	ball bearings
8	Max. static torque	Nm (oz-in)	1 (140)	1 (140)
9	Max. radial force at 8 mm from mounting face	N (lb)	50 (11.25)	150 (33.75)
10	Max. axial force	N (lb)	50 (11.25)	250 (56)
11	Force for press-fit	N (lb)	200 (45)	300 (67.5)
12	Average backlash at no-load		1.5°	1.5°
13	Average backlash at 0.6 Nm		3°	3°
14	Radial play	µm	≤ 60	≤ 20
15	Axial play	µm	50 -250	≤ 200
16	Max. recom. input speed	rpm	5000	5000
17	Operating temperature range	°C (°F)	-30 ... +65 (-22...+150)	

n (rpm) Dynamic torque

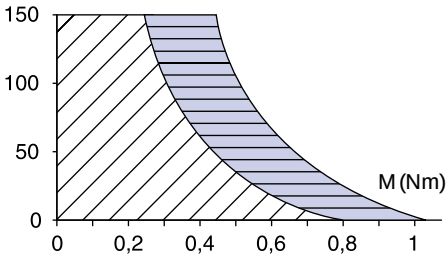

Values at the output shaft

Continuous working range

Temporary working range

© Portescap

Specifications subject to change without prior notice

escap RG1/9

Reduction gearbox with spur gears

Gearbox 1.2 Nm

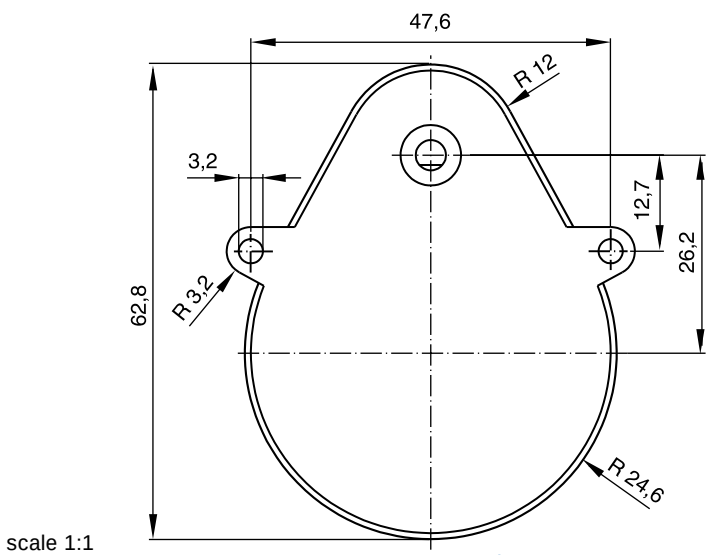

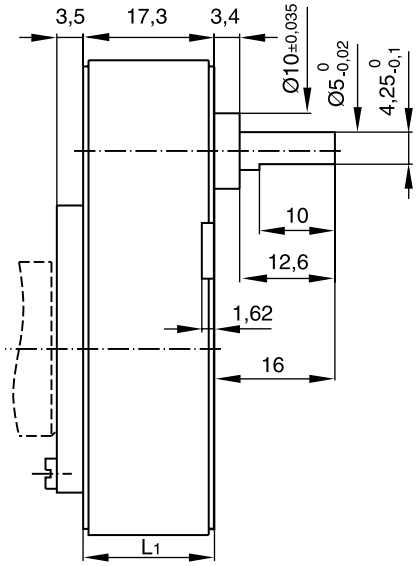

scale 1:1
dimensions in mm

RG1/9 • 1 ••••

Ratio ••••	4.25	9	12	18	24	48	90	180	360	810	1620
1 No. of gear stages	2	3	3	4	4	5	5	6	7	7	8
2 Dir. of rotation	=	≠	≠	=	=	≠	≠	=	≠	≠	=
3 Efficiency	0.8	0.7	0.7	0.65	0.65	0.6	0.6	0.55	0.5	0.5	0.45
4 L1 (mm)	17.3	17.3	17.3	17.3	17.3	17.3	17.3	17.3	17.3	17.3	17.3
5 Mass (g)	86	88	88	90	90	92	92	95	98	98	102
6 Available with motor	L2- length with motor (mm)										
23V58 • 1	69.6	69.6	69.6	69.6	69.6	69.6	69.6	69.6	69.6	69.6	69.6
23DT12 • 1	71.3	71.3	71.3	71.3	71.3	71.3	71.3	71.3	71.3	71.3	71.3
28L28 • 49	64.3	64.3	64.3	64.3	64.3	64.3	64.3	64.3	64.3	64.3	64.3
P520 • 60	47.1	47.1	47.1	47.1	47.1	47.1	47.1	47.1	47.1	47.1	47.1
PP520 • 01	47.1	47.1	47.1	47.1	47.1	47.1	47.1	47.1	47.1	47.1	47.1
P532 • 10	56.6	56.6	56.6	56.6	56.6	56.6	56.6	56.6	56.6	56.6	56.6

Also available: 23V48 • 9 / 23DT2R12 • 88 / 28LT12 • 49 / 22V28 • 201 / 22N48 • 204 / 23LT12 • 1 / 23LT2R12 • 120 / 26N58 • 1 / 26N48 • 6 / 23HV48 • 1

Availability: see enclosed document at the end of the catalogue

This gearbox is also available with a built-in clutch.

Motor + gearbox = L2

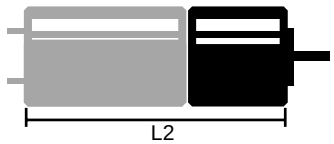

Characteristics

		RG1/9 • 1	RG1/9 2R • 1
7 Bearing type		sleeve bearings	ball bearings
8 Max. static torque	Nm (oz-in)	2 (280)	2 (280)
9 Max. radial force at 8 mm from mounting face	N (lb)	60 (13.5)	150 (33.75)
10 Max. axial force	N (lb)	50 (11.25)	250 (56.25)
11 Force for press-fit	N (lb)	250 (56.25)	300 (67.5)
12 Average backlash at no-load		2.5°	2.5°
13 Average backlash at 1 Nm		3°	3°
14 Radial play	µm	≤ 60	≤ 20
15 Axial play	µm	50 -300	≤ 250
16 Max. recom. input speed	rpm	5000	5000
17 Operating temperature range	°C (°F)	-30 ... +65 (-22...+150)	

n (rpm) — Dynamic torque

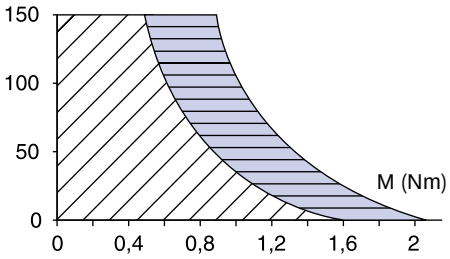

Values at the output shaft

Continuous working range

Temporary working range

© Portescap

Specifications subject to change without prior notice

escap K40

Reduction gearbox with spur gears

Gearbox 3 Nm

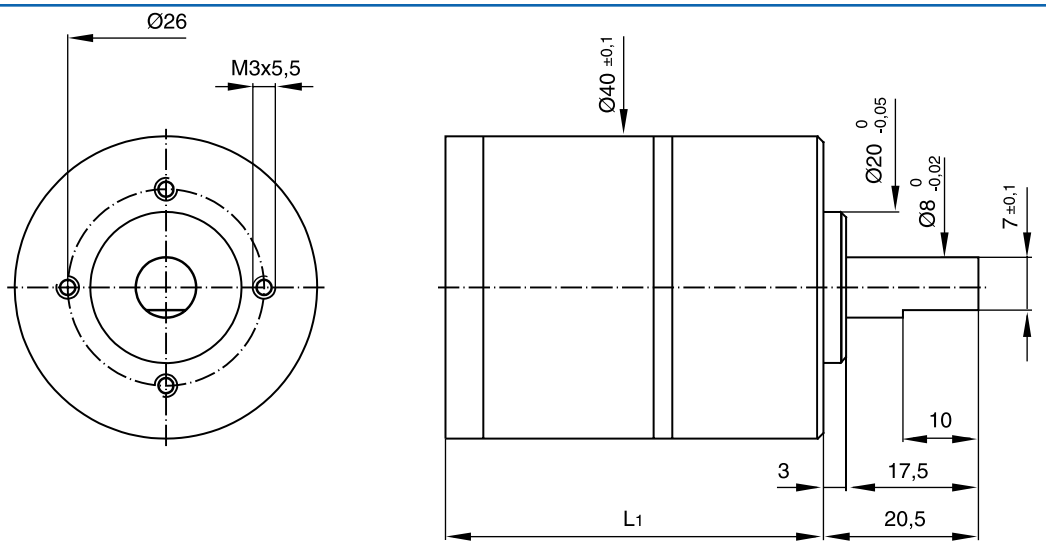

scale 1:1
dimensions in mm

K40 • 100 ••••

Ratio ••••	5	10	15	20	30	45	60	90	135	180	270	405
1 No. of gear stages	2	3	3	4	4	4	5	5	5	6	6	6
2 Dir. of rotation	=	≠	≠	=	=	=	≠	≠	≠	=	=	=
3 Efficiency	0.8	0.7	0.7	0.65	0.65	0.65	0.6	0.6	0.6	0.55	0.55	0.55
4 L1 (mm)	40	40	40	50	50	50	50	50	50	50	50	50
5 Mass (g)	120	125	125	145	145	145	150	150	150	155	155	155
6 Available with motor	L2- length with motor (mm)											
28LT12 • 49	83.2	83.2	83.2	93.2	93.2	93.2	93.2	93.2	93.2	93.2	93.2	93.2
35NT2R32 • 1 / • 50	102.9	102.9	102.9	112.9	112.9	112.9	112.9	112.9	112.9	112.9	112.9	112.9
35NT2R82 • 1 / • 50	102.9	102.9	102.9	112.9	112.9	112.9	112.9	112.9	112.9	112.9	112.9	112.9
P520 • 60	70.8	70.8	70.8	80.8	80.8	80.8	80.8	80.8	80.8	80.8	80.8	80.8
P532 • 10	80.3	80.3	80.3	90.3	90.3	90.3	90.3	90.3	90.3	90.3	90.3	90.3

Also available: 28L28 • 49 / 35HNT2R82 • 1 / PP520 • 01

Availability: see enclosed document at the end of the catalogue

Motor + gearbox = L2

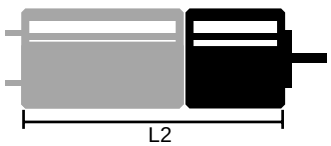

Characteristics

			K40 • 100	K40 2R • 100
7	Bearing type		sleeve bearings	ball bearings
8	Max. static torque	Nm (oz-in)	6 (850)	6 (850)
9	Max. radial force at 8 mm from mounting face	N (lb)	80 (18)	150 (33.75)
10	Max. axial force	N (lb)	80 (18)	150 (33.75)
11	Force for press-fit	N (lb)	200 (45)	200 (45)
12	Average backlash at no-load		1°	1°
13	Average backlash at 0,3 Nm		1.5°	1.5°
14	Radial play	µm	≤ 50	≤ 10
15	Axial play	µm	50 -250	≤ 10
16	Max. recom. input speed	rpm	4000	4000
17	Operating temperature range	°C (°F)	-30 ... +65 (-22...+150)	

n (rpm) Dynamic torque

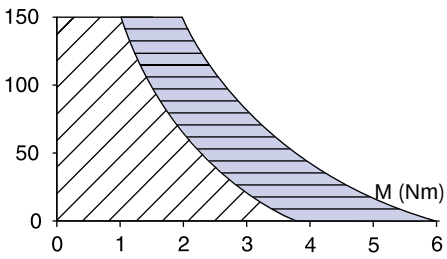

Values at the output shaft
Continuous working range
Temporary working range

© Portescap

Specifications subject to change without prior notice

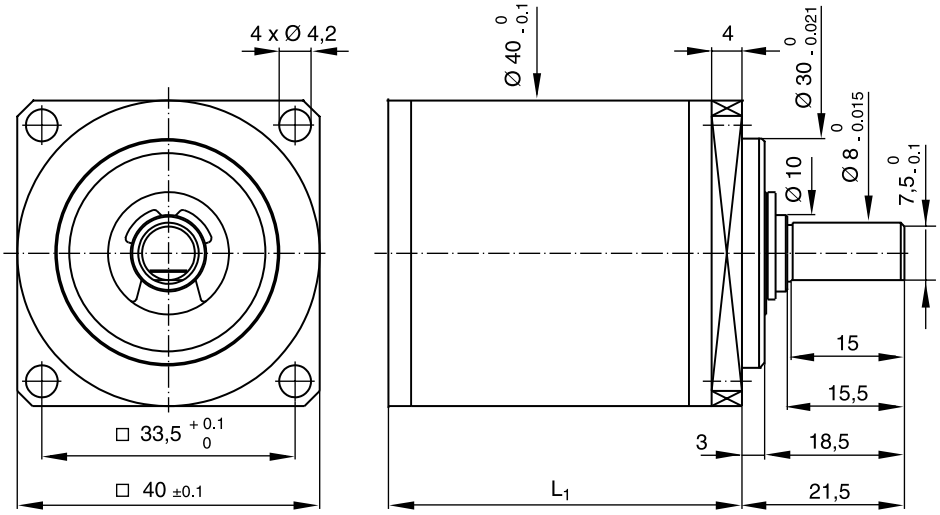

scale 1:1
dimensions in mm

R40 • 0 ••••

Ratio ••••	3.56	5.6	15.2	24	54.2	85.3	134	193	303	478	753
1 No. of gear stages	1	1	2	2	3	3	3	4	4	4	4
2 Dir. of rotation	=	=	=	=	=	=	=	=	=	=	=
3 Efficiency	0.85	0.85	0.7	0.7	0.6	0.6	0.6	0.5	0.5	0.5	0.5
4 L1 (mm)	38.3	38.3	46.8	46.8	55.3	55.3	55.3	63.8	63.8	63.8	63.8
5 Mass (g)	245	245	285	285	340	340	340	400	400	400	400
6 Available with motor	L2- length with motor (mm)										
28DT12 • 1	102.9	102.9	111.4	111.4	119.9	119.9	119.9	128.4	128.4	128.4	128.4
34L11 • 1	99.6	99.6	108.1	108.1	116.6	116.6	116.6	125.1	125.1	125.1	125.1
35NT2R32 • 1 / • 50	101.2	101.2	109.7	109.7	118.2	118.2	118.2	126.7	126.7	126.7	126.7
35NT2R82 • 1 / • 50	101.2	101.2	109.7	109.7	118.2	118.2	118.2	126.7	126.7	126.7	126.7

Also available: 28DT2R12 • 98 / 35HNT2R82 • 1

Availability: see enclosed document at the end of the catalogue

Motor + gearbox = L2

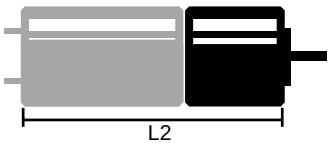

Characteristics

		R40 • 0
7 Bearing type		ball bearings
8 Max. static torque	Nm (oz-in)	40 (5700)
9 Max. radial force at 8 mm from mounting face	N (lb)	600 (135)
10 Max. axial force	N (lb)	400 (90)
11 Force for press-fit	N (lb)	600 (135)
12 Average backlash at no-load		1°
13 Average backlash at 0,3 Nm		1.3°
14 Radial play	µm	≤10
15 Axial play	µm	≤10
16 Max. recom. input speed	rpm	6000
17 Operating temperature range	°C (°F)	-30 ... +85 (-22...+185)

n (rpm) Dynamic torque

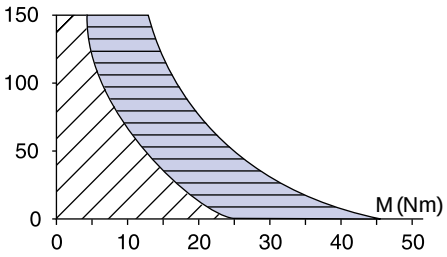

Values at the output shaft
Continuous working range
Temporary working range

© Portescap

Specifications subject to change without prior notice

escap L10

Linear actuator

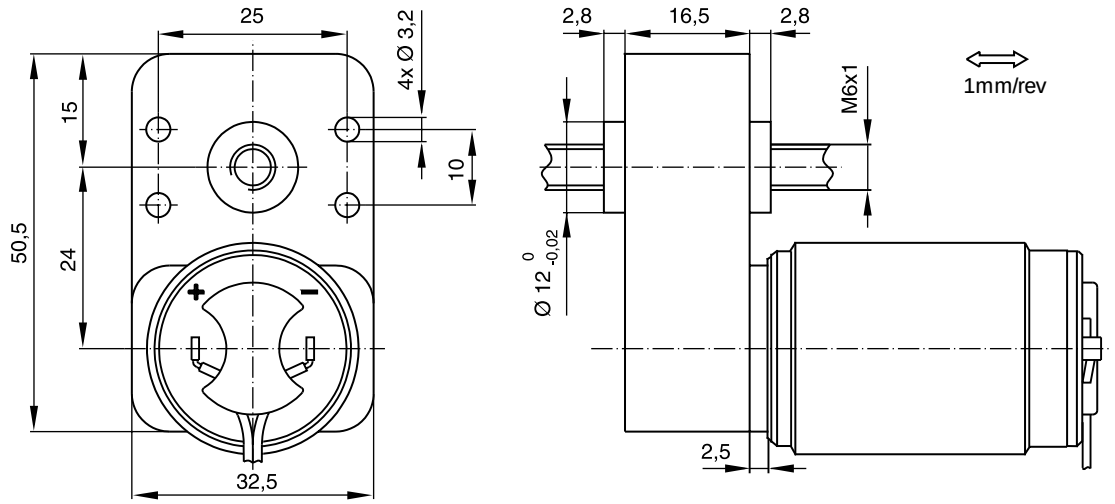

scale 1:1
dimensions in mm

L10 • 01 ••••

Ratio ••••	5	10	20	50	100

Characteristics		L10
1 Max. recom. holding force	N (lb)	200 (45)
2 Max. recom. linear force	N (lb)	50 at 10 mm/s (9 at 2 ft/min)
	N (lb)	100 at 2 mm/s (22 at 0.4 ft/min)
3 Average axial play	mm	0.4
4 Recom. linear speed range	mm/s	0.5 to 20
5 Temperature range	°C (°F)	-15...+55 (+5...+131)
6 Available with motor		22V28•201/•204
		28L28•49
		P310•09

Also available: 22N28 • 204 / 23LT12 • 1 / 28LT2R12 • 120 / 23V58 • 1 / • 9 / 23HV48 • 1 / 23DT12 • 1 / 23DT2R12 • 88 / 26N58 • 1 / • 6 / 28LT12 • 49

The leadscrew should be prevented from rotating by the user.

Modifications to obtain higher linear speeds are available on request.

Accessories are also available on request, these include: fixing bolts, forked connector and threaded rod.

Brass output stage.

Disponibility: see enclosed document at the end of the catalogue.

escap BF16

Gearbox with built-in clutch

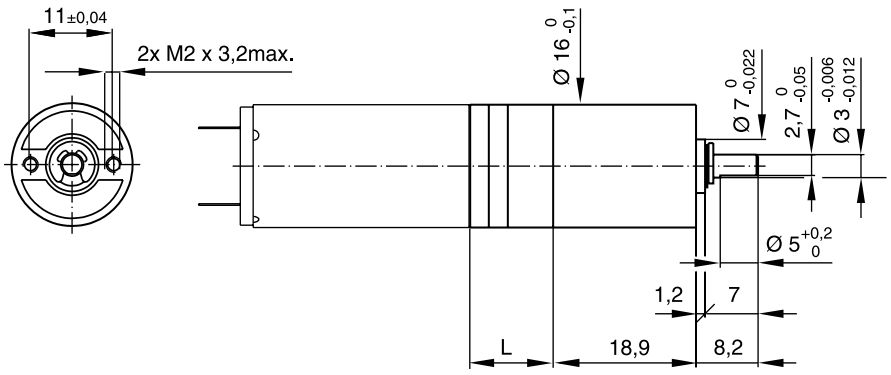

scale 1:1
dimensions in mm

BF16

Characteristics		BF16
1 Min. slipping torque	mNm (oz-in)	5 (0.71)
2 Max. slipping torque	mNm (oz-in)	100 (14.1)
3 Precision of setting		± 15%
4 Length		L = Lgbx + 18.9

Other gearbox characteristics remain unchanged, see escap® B16

Disponibility: see enclosed document at the end of the catalogue

© Portescap

Specifications subject to change without prior notice

Encoder & Tachometer data sheet section



Table of contents

Product type	page
22N	136
28L	136
22HV	137
23HV	137
28GD	137
35HNT	137
D13	138
F16	138
E9	139

© Portescap

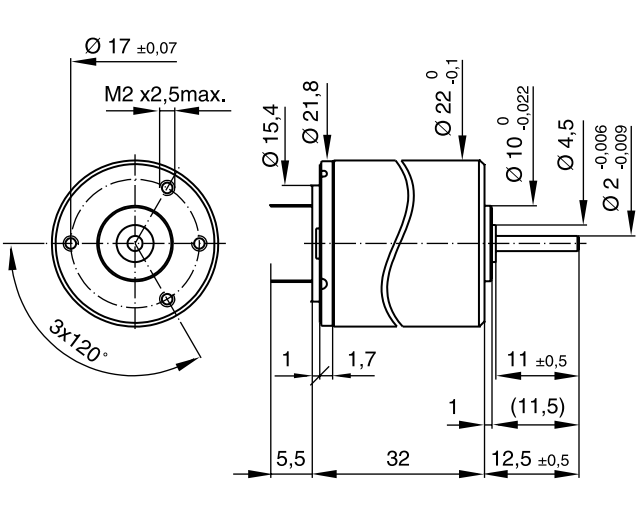

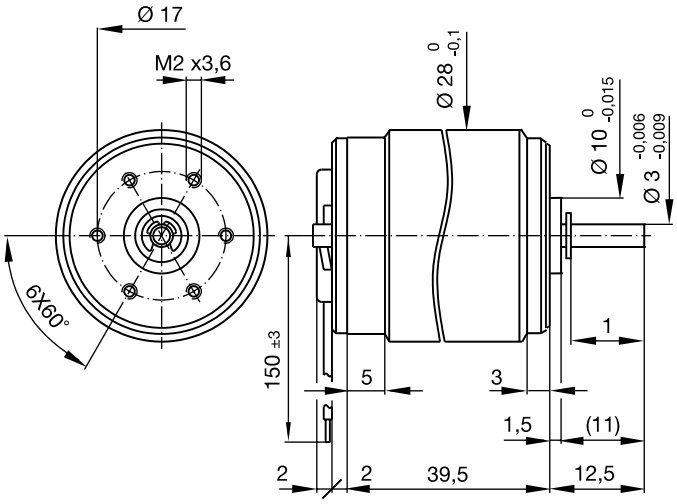

scale: 1:1
dimensions in mm

22N24 - 104 • 4

28L24 - 405 • 49

Tachogenerators types		22N24 - 104 • 4	28L24 - 405 • 49
1 EMF ± 2%	V/1000 rpm	5.5	13.5
2 Typical ripple peak-peak	%	8	6
3 Ripple frequency	per rev.	18	18
4 Terminal resistance	ohm	450	415
5 Rotor inertia	$kgm^2 . 10^{-7}$	2.9	6.6
6 Average friction torque	mNm (oz-in)	0.1 (0.014)	0.4 (0.056)
7 Mass	g	64	125

Ripple

Every coil is switched twice per revolution, at the positive and negative brush. The ripple frequency per revolution is therefore twice the number of coils or number of commutator segments.

Availability: see enclosed document at the end of the catalogue

Typical tachogenerator signal: 9 segments commutator

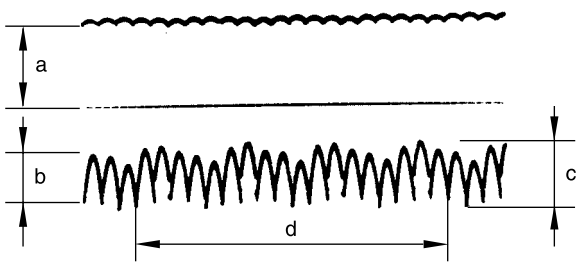

a) value of the induced voltage (1 V) with actual ripple of 90 mV (9%)

b) (scale 10 times larger than a) minimum theoretical ripple, frequency per revolution equals twice the number of commutator segments

c) actual ripple value, twice per revolution

d) signal for one complete revolution of the rotor

© Portescap

Specifications subject to change without prior notice

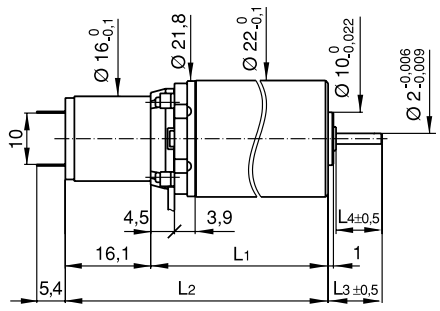

22HV48-213E/204 • 2

L1 = 39.7
L2 = 53.8
L3 = 7.5
L4 = 6.5
Available with: K24, R22, K27

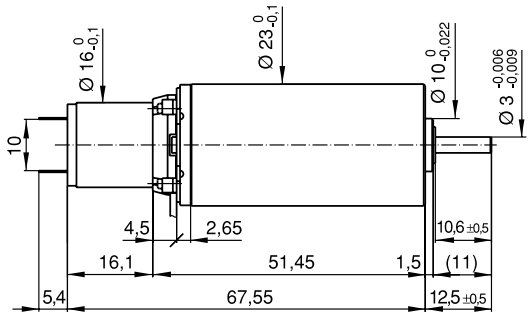

23HV48-216E/204 • 1

Available with: K38, RG1/8, RG1/9

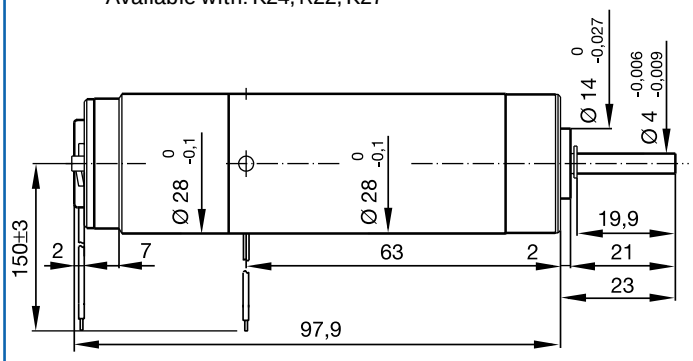

28GD11-222E/404E • 2

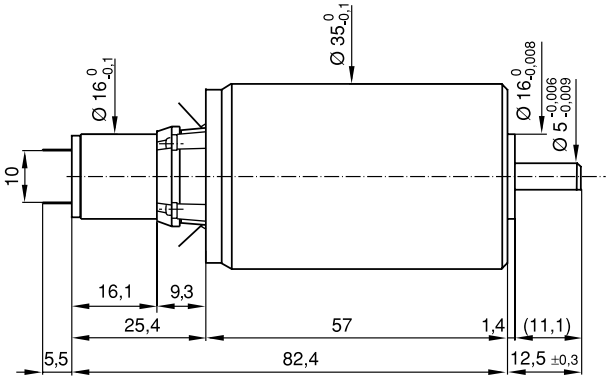

35HNT2R82-426SP/204 • 1

Available with: R32, R40

Motor types Winding types (motor/tacho)		22HV48 -213E/204	23HV48 -216E/204	28GD11 -222E/404E	35HNT2R82 -426SP/204
1 EMF ± 2%	V/1000 rpm	1	1	5.2	1
2 Typical ripple pk-pk	%	7	7	7	7
3 Ripple frequency	per rev.	18	18	18	18
4 Terminal resistance	ohm	175	175	175	175
5 Rotor inertia	$kgm^2 . 10^{-7}$	0.3	0.3	0.3	0.3
Motor-tacho unit specifications					
6 Measuring voltage	V	12	12	18	32
7 No-load speed	rpm	7400	4700	5200	6100
8 Average no-load current	mA	18	21	28	85
9 Typical starting voltage	V	0.30	0.26	0.40	-
10 Rotor inertia	$kgm^2 . 10^{-7}$	3.5	6.2	24	71.7
11 Mechanical time constant	ms	16	11	13	5.2
12 Resonance frequency	Hz	2000	2000	800	3000
13 Length L	mm	53.8	67.6	97.9	82.4
14 Mass	g	84	116	270	325
15 Other motors characteristics	see page	22N48	23V48	28D11	35NT82

- Recommended temperature range: -10 to +65 °C (+14 °F to +150 °F)
- Linearity/reversion error: ± 0.1%
- Linearity with 10 Kohm load: ± 0.7%
- Temperature coef. of EMF: -0.02%/°C
- Temperature coef. of resistance: +0.4%/°C
- Max. recom. current for the tacho: < 1 mA

Availability: see enclosed document at the end of the catalogue

© Portescap

Specifications subject to change without prior notice

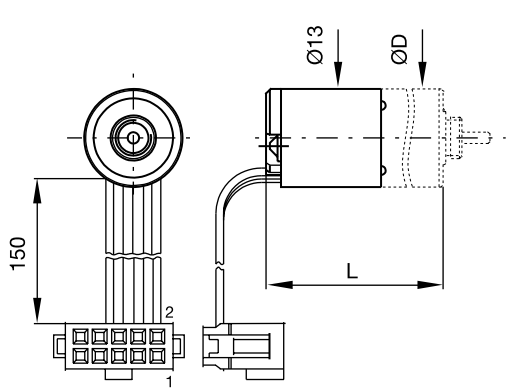

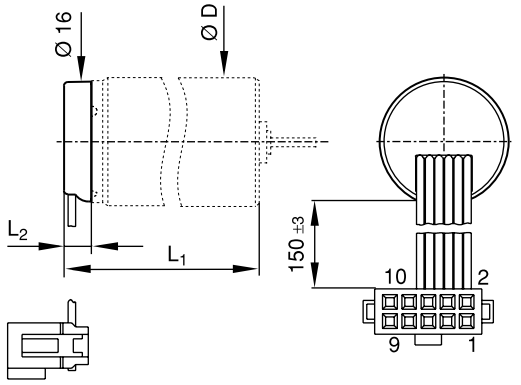

scale: 1:1
dimensions in mm

Encoder type D connections [1]

1	Motor +	6	Motor -
2	Vcc	7	NC
3	Channel A	8	NC
4	Channel B	9	NC
5	GND	10	NC

Encoder type F connections [1]

1	Motor +	6	Motor -
2	Vcc	7	NC
3	Channel A	8	NC
4	Channel B	9	NC
5	GND	10	NC

Characteristics at 22 °C

				D	F
1	Number of pulses per rev.			12; 10	16; 15
2	Supply voltage	Vcc	V	5	3.5 ...15
3	Supply current	typical at 5 V	mA	4	6
4	Rise time	t4	µs	0.125	5
5	Fall time	t5	µs	0.05	0.2
6	Output signal[2]		-	Two channels / square wave in quadrature	
7	Electrical phase shift between U1 and U2	t3/t1 x 360	degree	90 ± 40	
8	Signal ratio[3]	t2/t1	%	50 ± 25	
9	Max. count frequency		kHz	10	15
10	Operating temperature range		°C	-20 ... +85	
11	Inertia		10^{-7} x kgm²	0.1	
12	Measuring conditions	Temperature	°C	22	
		Supply voltage	V	5	
		Load resistance	Mohm	1	
		Load capacitance	pF	25	

Encoder F available on motor types	16N	17S	17N	22S	22N	22V
13 L_1 = length (mm)	30	20	28.9	28	34	36.3
14 L_2 = length (mm)	3.6	3.6	3.6	3.1	3.1	3.1
15 D = motor diameter (mm)	16	17	17	22	22	22

Encoder D available on motor	13N
16 L = length (mm)	40.4
17 D = motor diameter (mm)	13

Availability: see enclosed document at the end of the catalogue

Typical encoder output signal

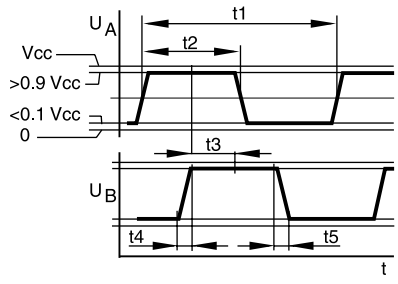

t1: Period
t2/t1: Signal ratio
t3: Phase shift
t4: Rise time
t5: Fall time

[1] Connector Dupont type Quikie II or equivalent
[2] Internal pull-up resistor: 10 kohm
Only available with the F type encoder
[3] Over the entire frequency and temperature range

© Portescap

Specifications subject to change without prior notice

3 channel optical encoder

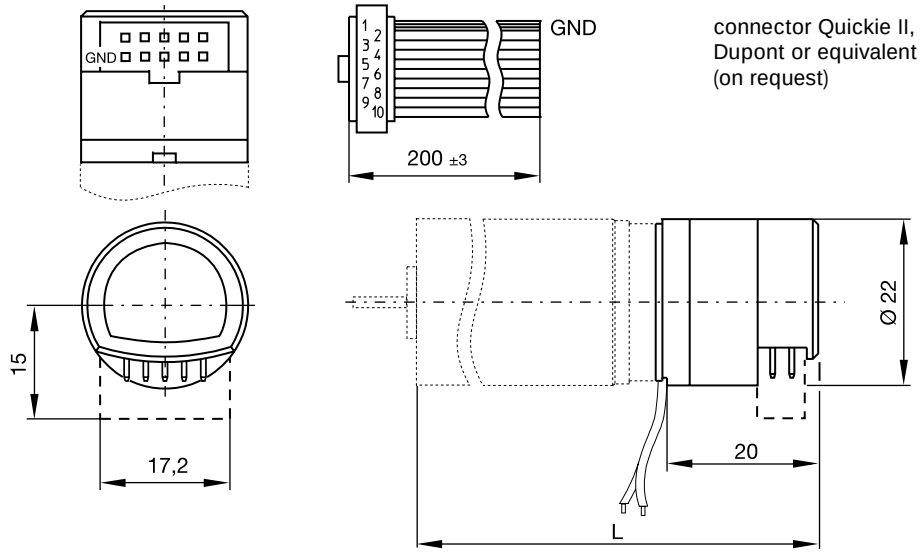

connector Quickie II,
Dupont or equivalent
(on request)

scale: 1:1
dimensions in mm
mass: 6.2 g

Characteristics at 22°C

1	Number of lines available			100, 144, 200, 256, 300, 360, 500[1], 512[1]
2	Supply current	typical	mA	10
		max.	mA	20
		stand-by	µA	50
3	Output signal		CMOS	compatible
4	Electrical phase shift between A and B		degree	90 ± 20
5	Duty cycle		%	50 ± 10
6	Max. count frequency		kHz	200
7	Operating temperature range	at 90% humidity	°C	-40 to + 85
8	Code wheel moment of inertia		10^{-7} x kgm²	0.12
9	Supply voltage	Vcc	V	5 ± 10%

Pin out		1	2	3	4	5	6	7	8	9	10
10	Version 1	GND	Vcc	dir.	$\overline{\text{stand-by}}$	$\overline{A}$	A	$\overline{B}$	B	$\overline{Z}$	Z
11	Version 2	GND	Vcc	dir.	$\overline{\text{stand-by}}$	up	A	down	B	pulse	Z

Available on motor types	22N48	22V48	23LT12	23V48	23DT12	26N48	28DT12	35NT
12 L = length (mm)	53.9	56.2	57.6	67.6	71	62.1	85.1	84
13 see page	55	57	58	59	60	61	65	67-68

[1] ask for a 2R motor type for use with the E9 in 500 or 512 lines version

Availability: see enclosed document at the end of the catalogue

Typical encoder output signal

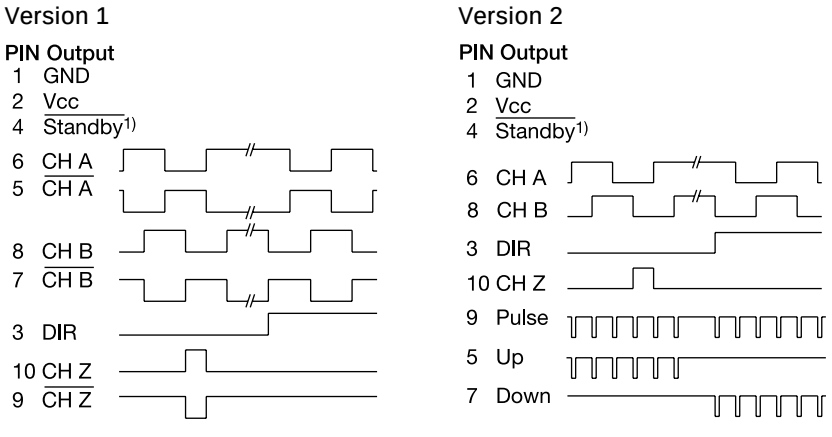

Features

- 2 channel quadrature output and index pulse
- small size
- integrated direction of rotation detection
- stand-by function with latched state of channels (to desactivate the stand-by mode, connect the pin 4 to the +5V)
- complementary outputs
- up/down pulse signals (on request)
- CMOS compatible.
  [1] The input Standby has to be connected to 0 V_{DC} or +5 V_{DC}
- single 5V_{DC} supply

© Portescap

Specifications subject to change without prior notice