IM5084

Inductive sensor

IMC4020UCPKG/K1/SC/US-100-DPA

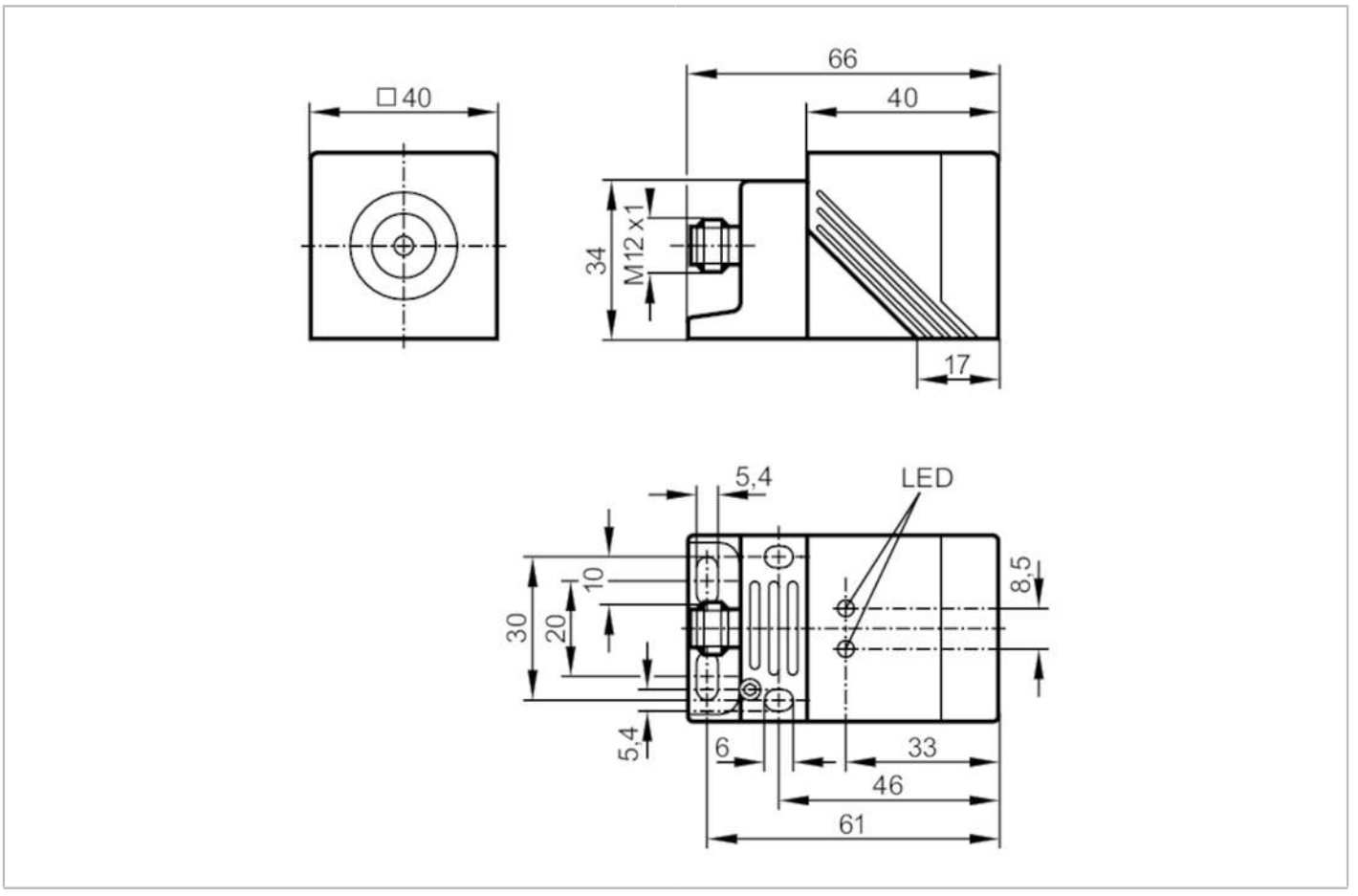

Product characteristics		
Electrical design		PNP
Output function		complementary
Sensing range	[mm]	20
Housing		rectangular
Dimensions	[mm]	40 x 40 x 66
Application		
Special feature		Gold-plated contacts; Correction factor K = 1; Magnetic-field immune; anti-spatter
Magnetic-field immune		yes
Max. magnetic field immunity	[mT]	300
Electrical data		
Operating voltage	[V]	10...36 DC
Current consumption	[mA]	20; (24 V)
Protection class		II
Reverse polarity protection		yes
Outputs		
Electrical design		PNP
Output function		complementary

IM5084

Inductive sensor

IMC4020UCPKG/K1/SC/US-100-DPA

Max. voltage drop switching output DC	[V]	2.5	
Permanent current rating of switching output DC	[mA]	250	
Switching frequency DC	[Hz]	200	
Short-circuit protection		yes	
Type of short-circuit protection		pulsed	
Overload protection		yes	
Detection zone			
Sensing range	[mm]	20	
Accuracy / deviations			
Correction factor		steel: 1 / stainless steel: 1.1 / brass: 1.1 / aluminium: 1.1 / copper: 1.1	
Correction factor K = 1		yes	
Operating conditions			
Ambient temperature	[°C]	-25...70	
Protection		IP 67	
Tests / approvals			
EMC		EN 60947-5-2	
MTTF	[years]	945	
UL approval		Ta	0...40 °C
		Enclosure type	Type 1
		power supply	Hazardous voltage
		File number UL	E174191
Mechanical data			
Weight	[g]	240	
Housing		rectangular	
Mounting		flush mountable	
Dimensions	[mm]	40 x 40 x 66	
Materials		housing: PPE; sensing face: PPE black anti-spatter; end cap: diecast zinc; clamp: diecast zinc black; screw: steel galvanised	
Displays / operating elements			
Display		switching status	1 x LED, yellow
		operation	1 x LED, green
Accessories			
Items supplied		Mounting bracket: 1	
		Allen key: 1	
Remarks			
Pack quantity		1 pcs.	

IM5084

Inductive sensor

IMC4020UCPKG/K1/SC/US-100-DPA

Electrical connection - plug

Connector: 1 x M12; coding: A; Locking: brass, white bronze coated; Contacts: gold-plated

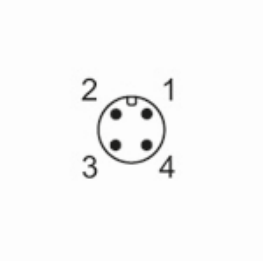

Connection

