SP 8-100

3½ Digit LED Voltmeter Module

The SP 8-100 features a 200mV d.c. measurement range with auto-zero and auto-polarity. Decimal points are user selectable. The SP 8-100 features a negative rail generator which enables the meter to measure a signal referenced to its own power supply 0V. The bright red LED display ensures excellent readability under low light conditions. The module is easily fitted into the panel, using the fixing clip provided. The module's low cost means it will suit high and low volume applications. The design of the panel meter's housing and seal ensures splash proofing in many applications.

FEATURES

- 14.2mm (0.56") Digit Height
- 200mV d.c. Full Scale Reading
- 50mA @ +5V d.c. Power Supply
- Auto-zero and Auto-polarity
- Programmable Decimal Points
- Bright Red LED Display
- Splash Proof



TYPICAL APPLICATIONS

- Precision Instrumentation Systems
- Power Supply Monitoring
- Test Boxes
- Panel-Mount Indication

ORDERING INFORMATION

	Stock Number
Standard Meter	**SP 8-100**

ELECTRICAL SPECIFICATIONS

Specification	Min.	Typ.	Max.	Unit
Accuracy (overall error) *		0.1		% (±1 count)
Linearity			±1	count
Sample rate		2.5		samples/sec
Operating temperature range	0		50	°C
Warm-up time		10		minute
Temperature stability		150		ppm/°C
Supply voltage	4.75	5	5.25	V
Supply current		50	90	mA
Input leakage current (Vin = 0V)		1	10	pA

* To ensure maximum accuracy, re-calibrate periodically.

SAFETY

To comply with the Low Voltage Directive (LVD 93/68/EEC), input voltages to the module's pins must not exceed 60Vdc. The user must ensure that the incorporation of the panel meter into the user's equipment conforms to the relevant sections of BS EN 61010 (Safety Requirements for Electrical Equipment for Measuring, Control and Laboratory Use).

LASCAR ELECTRONICS LTD.
MODULE HOUSE,
WHITEPARISH,
WILTSHIRE SP5 2SJ,
UK
TEL: +44 (1794) 884567
FAX: +44 (1794) 884616
E-mail: sales@lascar.co.uk

LASCAR ELECTRONICS INC.
4258 WEST 12th STREET,
ERIE,
PA 16505,
USA
TEL: +1 (814) 835 0621
FAX: +1 (814) 838 8141
E-mail: us-sales@lascarelectronics.com

LASCAR ELECTRONICS (HK) LTD.
8th FLOOR, CHINA AEROSPACE CENTRE,
143 HOI BUN ROAD,
KWUN TONG, KOWLOON,
HONG KONG
TEL: +852 2389 6502
FAX: +852 2389 6535
E- mail: saleshk@lascar.com.hk

DIMENSIONS

All dimensions in mm (inches)

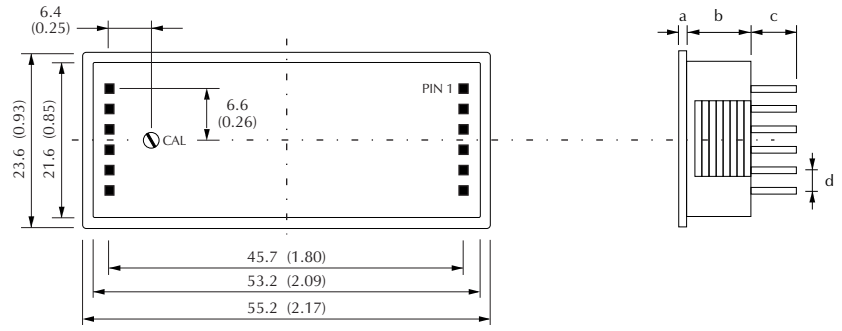

a. 1.0 (0.04)
b. 14.2 (0.56)
c. 6.0 (0.24)
d. 2.54 (0.10)

PANEL FITTING

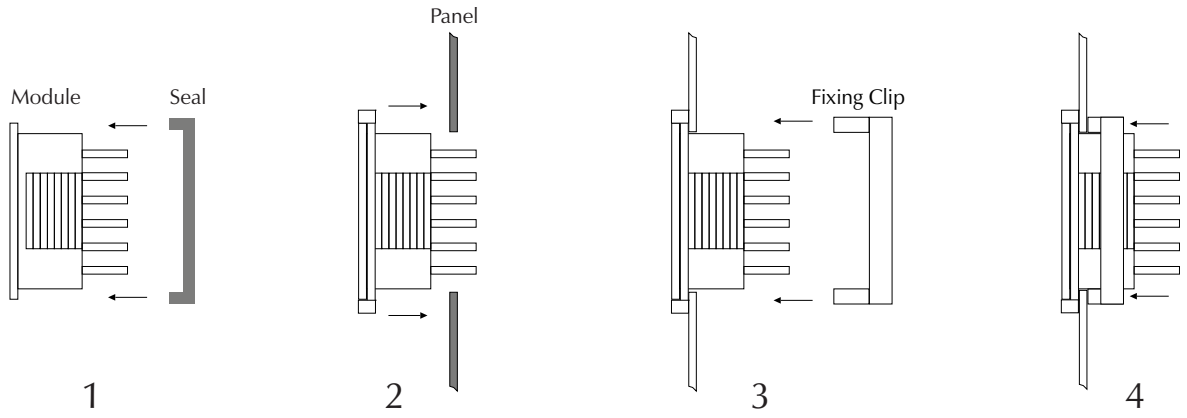

FUNCTIONAL BLOCK DIAGRAM

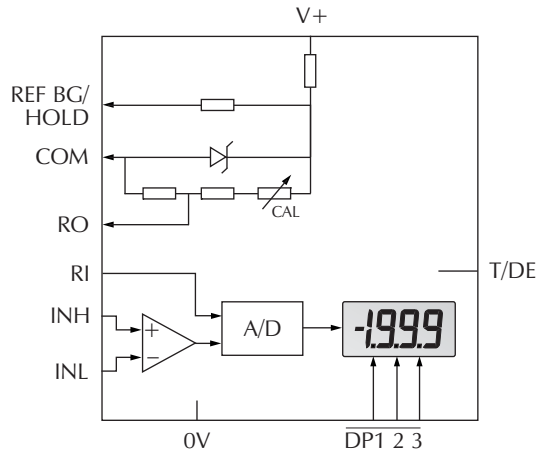

PIN CONFIGURATION (rear view)

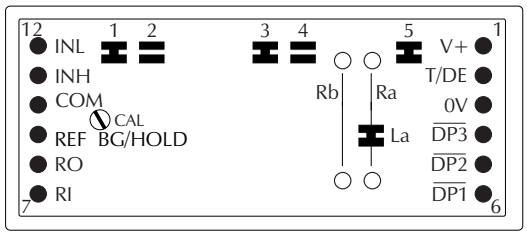

CIRCUIT DIAGRAM

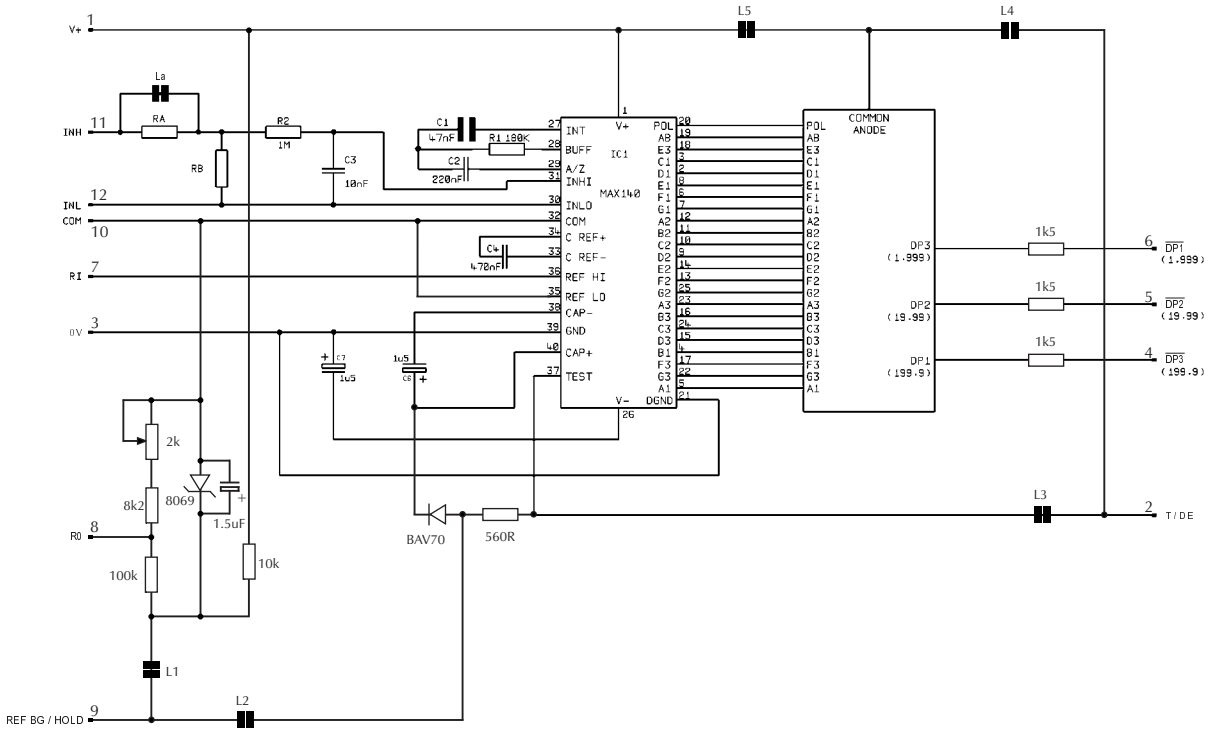

PIN FUNCTIONS

1. V+ — Positive power supply to the meter.
2. T — Display Test. Connect to V+ to display all LED segments, except for decimal points. Do not connect T to V+ for more than 10 seconds.
   DE — When solder links L3 and L5 are cut and solder link L4 is closed, the LED display is blanked. Connect DE to V+ to activate the LED display. This feature is useful for low power applications. The Display Test function is then no longer available.
3. 0V — 0V power supply connection to the meter.
4. $\overline{DP3}$ — Connect to 0V to display DP3 (199.9).
5. $\overline{DP2}$ — Connect to 0V to display DP2 (19.99).
6. $\overline{DP1}$ — Connect to 0V to display DP1 (1.999).
7. R I — Reference voltage input for the meter's A/D converter.
8. RO — Precision reference voltage output. Connect to RI for normal operation.
9. REF BG — Output voltage from bandgap reference, +1.23V with respect to COM, must not be allowed to supply more than 15µA to external loads.
   HOLD — When solder link L1 is cut and solder link L2 is closed, then connecting HOLD to V+ will freeze the current reading on the display. After disconnecting HOLD from V+, and allowing time for the reading to stabilise, the display will show the currently measured value.
10. COM — Ground for analogue section of A/D converter. It is actively held at 3.05V (nom) below V+ and must not be allowed to sink excessive current (>100µA) by, for instance, connecting to a higher voltage.
11. INH — Positive measuring input.
12. INL — Negative measuring input.

Note:

A negative supply is generated internally and mirrors the positive supply. For example: if V+ is +5V, then the internally generated V- is -5V. When measuring with the input referenced to the same supply rail as that of the panel meter, then the limitations on the input range are (V- + 1.5V) to (V+ - 1.5V).

SCALING

Two resistors Ra and Rb may be added to the SP 8-100 to alter the full scale reading (FSR) of the meter - see table. The meter will have to be re-calibrated by adjusting the calibration potentiometer (CAL) on The module.

	FSR	Ra	Rb
Voltage Vin	2V	910k**	100k
	20V	1M**	10k
	200V	1M**	1k
	2000V*	1M**	100R
Current Iin	200µA	0R	1k
	2mA	0R	100R
	20mA	0R	10R
	200mA	0R	1R

* Ensure that Ra is rated for high voltage use.
** Ensure solder link La is cut.

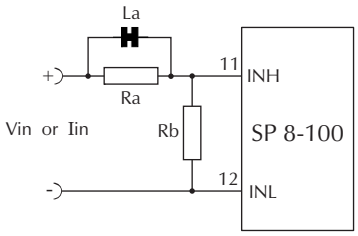

APPLICATIONS

Do not connect more than one meter to the same power supply if the meters cannot use the same signal ground. Taking any input beyond the power supply rails will damage the meter.

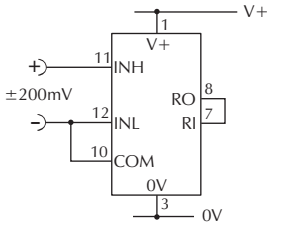

Measuring an input voltage referenced to a floating supply, i.e. the input voltage and the meter's power supply are isolated from each other.

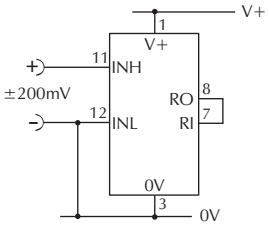

Measuring a single ended input voltage referenced to supply, i.e. the input voltage and the meter's power supply share the same 0V rail.

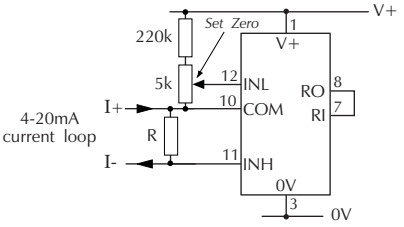

Measuring a 4-20mA loop current.

$$R = \frac{\text{Reading at 20mA}}{160}$$

The meter's power supply must be isolated from the 4-20mA current loop.

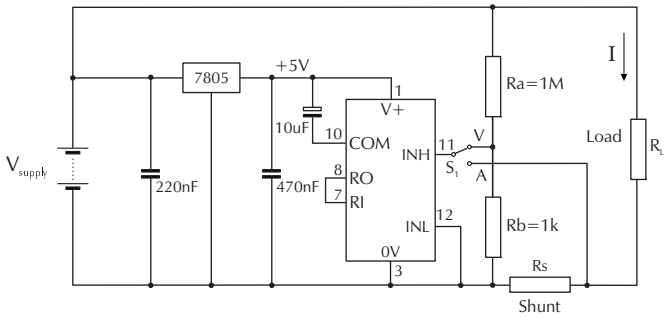

Measuring supply voltage and current to a load.

S_1 selects between voltage and current measurement.

Ra and Rb shown scaled for $200V_{FSR}$ $\quad Rs = \frac{200mV}{I_{FSR}}$ (e.g. 0.1Ω / 400mW for 2A full scale)

Display DP1, DP2 or DP3, by connecting to 0V, as required.

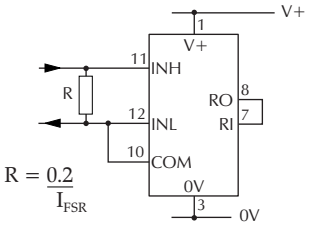

Measuring current.
The meter's supply is isolated from the current being measured.