TA2447

Temperature transmitter

TA-150CLER12-A-ZVG/US

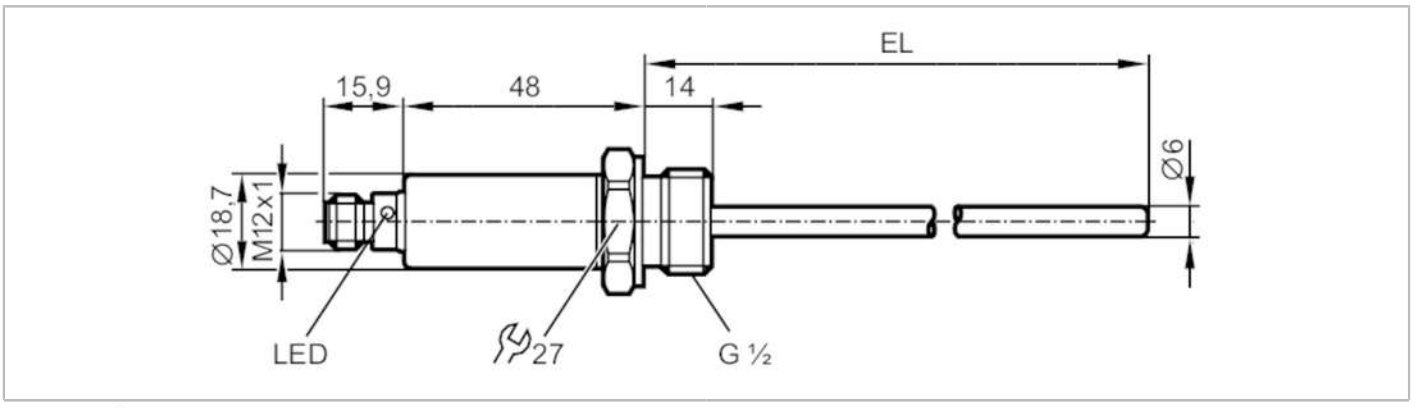

Product characteristics		
Number of inputs and outputs		Number of analogue outputs: 1
Measuring range	[°C]	-50...150
Communication interface		IO-Link
Process connection		threaded connection G 1/2 external thread
Installation length EL	[mm]	150
Application		
Special feature		Gold-plated contacts
Measuring element		1 x Pt 1000; (to DIN EN 60751, class A)
Media		liquids and gases
Pressure rating		160 bar | 16 MPa
Note on pressure rating		sensor When mounted in adapters the specifications of the adapter data sheet apply.
Electrical data		
Operating voltage	[V]	18...32 DC; ("supply class 2" to cULus)
Current consumption	[mA]	< 50
Protection class		III
Reverse polarity protection		yes
Power-on delay time	[s]	1
Inputs / outputs		
Number of inputs and outputs		Number of analogue outputs: 1
Outputs		
Total number of outputs		1
Output signal		analogue signal; IO-Link; (configurable)
Number of analogue outputs		1
Analogue current output	[mA]	4...20
Max. load	[Ω]	250; ((18...19 V); 19...32 V: 300 Ω)
Short-circuit protection		yes
Overload protection		yes
Measuring/setting range		
Probe length L	[mm]	136

TA2447

Temperature transmitter

TA-150CLER12-A-ZVG/US

Measuring range	[°C]	-50...150	
Factory setting		0...100 °C	
Resolution			
Resolution of analogue output	[K]	0.04	
Accuracy / deviations			
Precision analogue output	[K]	± 0,3 + (± 0,1 % MS)	
Temperature coefficient [% of the span / 10 K]		0,1; (in case of deviation from the reference condition 25 ± 5 °C)	
Response times			
Dynamic response T05 / T09	[s]	1 / 3	
Interfaces			
Communication interface		IO-Link	
Transmission type		COM2 (38,4 kBaud)	
IO-Link revision		1.1	
Operating conditions			
Ambient temperature	[°C]	-25...80	
Storage temperature	[°C]	-40...100	
Protection		IP 67; IP 68; IP 69K	
Tests / approvals			
EMC		DIN EN 61000-6-2	
Shock resistance		DIN IEC 68-2-27	50 g (11 ms)
Vibration resistance		DIN IEC 68-2-6	20 g (10...2000 Hz)
MTTF	[years]	346	
UL approval		UL Approval no.	K002
Mechanical data			
Weight	[g]	147.5	
Housing		cylindrical	
Dimensions	[mm]	Ø 18.7 / L = 213.9	
Materials		stainless steel (316L/1.4404); PEI; FKM	
Materials (wetted parts)		stainless steel (316L/1.4404); O-ring: FKM	
Tightening torque	[Nm]	45	
Process connection		threaded connection G 1/2 external thread	
Probe diameter	[mm]	6	
Installation length EL	[mm]	150	
Displays / operating elements			
Display		operating status	1 x LED, green
Remarks			
Remarks		MS = set measuring span	
Pack quantity		1 pcs.	

TA2447

Temperature transmitter

TA-150CLER12-A-ZVG/US

Electrical connection

Connector: 1 x M12; coding: A; Contacts: gold-plated

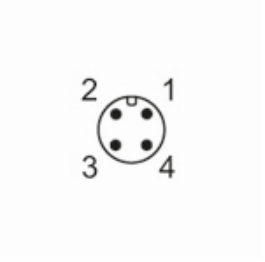

Connection

