IM0056

Inductive sensor

IMC2020BARKA/LS-300BL RT

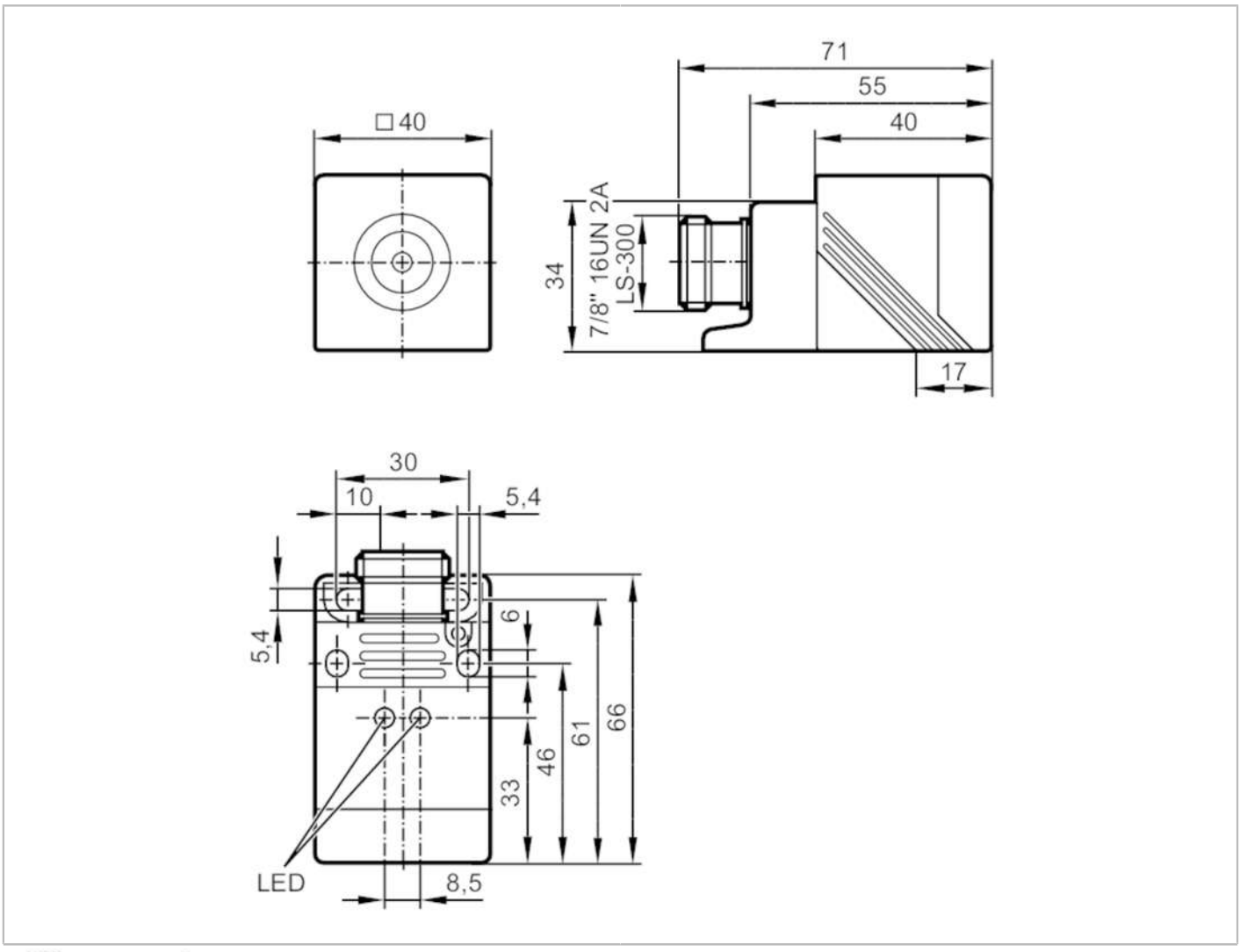

Product characteristics		
Output function		normally open
Sensing range	[mm]	20
Housing		rectangular
Dimensions	[mm]	40 x 40 x 66
Electrical data		
Frequency AC	[Hz]	47...63
Operating voltage	[V]	20...140 AC / 10...140 DC
Protection class		I
Reverse polarity protection		yes
Outputs		
Output function		normally open
Max. voltage drop switching output DC	[V]	5.5
Max. voltage drop switching output AC	[V]	5.5

IM0056

Inductive sensor

IMC2020BARKA/LS-300BL RT

Minimum load current	[mA]	5.5
Max. leakage current	[mA]	1.7 (140 V AC/DC)
Permanent current rating of switching output AC	[mA]	450
Permanent current rating of switching output DC	[mA]	450
Short-time current rating of switching output	[mA]	2200; (20 ms / 0,5 Hz)
Switching frequency AC	[Hz]	25
Switching frequency DC	[Hz]	100
Short-circuit protection		yes
Type of short-circuit protection		pulsed
Overload protection		yes

Detection zone

Sensing range	[mm]	20
Real sensing range Sr	[mm]	20 ± 10 %
Operating distance	[mm]	0...16.2

Accuracy / deviations

Correction factor		steel: 1 / stainless steel: 0.7 / brass: 0.4 / aluminium: 0.4 / copper: 0.3
Hysteresis	[% of Sr]	3...20
Switch point drift	[% of Sr]	-10...10

Operating conditions

Ambient temperature	[°C]	-25...70
Protection		IP 67

Tests / approvals

EMC		EN 60947-5-2	
MTTF	[years]	351	
UL approval		Ta	0...40 °C
		Enclosure type	Type 1
		power supply	Hazardous voltage
		File number UL	E174191

Mechanical data

Weight	[g]	270.5
Housing		rectangular
Mounting		flush mountable
Dimensions	[mm]	40 x 40 x 66
Materials		housing: PPE; sensing face: PPE orange; end cap: diecast zinc; clamp: diecast zinc black; screw: steel galvanised

Displays / operating elements

Display	switching status	1 x LED, red
	operation	1 x LED, green
	short circuit	1 x LED, green/red alternately flashing

Remarks

Remarks	5 positions of the active zone possible
Pack quantity	1 pcs.

IM0056

Inductive sensor

IMC2020BARKA/LS-300BL RT

Electrical connection - plug

Connector: 1 x 7/8"; coding: A; Locking: brass, white bronze coated

