WIRING DIAGRAM

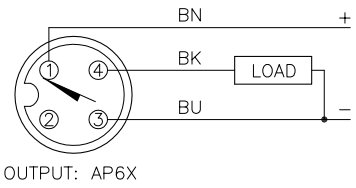

OUTPUT: AP6X

SHORT–CIRCUIT AND OVERLOAD PROTECTED

LOCKNUT LN–SS18

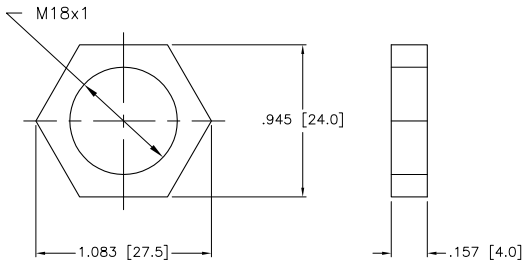

SPECIFICATIONS

OPERATING VOLTAGE	10–30 VDC
DIFFERENTIAL TRAVEL (HYSTERESIS)	3–15% (5% TYPICAL)
VOLTAGE DROP ACROSS CONDUCTING SENSOR	≤1.8 V at 200 mA
OUTPUT FUNCTION	NORMALLY OPEN, 3–WIRE DC
TTL COMPATIBLE	NO
SHORT–CIRCUIT PROTECTED	YES
TRIGGER CURRENT FOR OVERLOAD PROTECTION	≥ 220 mA
CONTINUOUS LOAD CURRENT	≤ 200 mA
OFF–STATE (LEAKAGE) CURRENT	<100 µA
NO–LOAD CURRENT	≤ 15 ms
TIME DELAY BEFORE AVAILABILITY	≤ 8 ms
POWER–ON EFFECT	Per IEC 60947–5–2
REVERSE POLARITY PROTECTION	YES
WIRE–BREAK PROTECTION	YES
TRANSIENT PROTECTION	Per EN 60947–5–2
OPERATING TEMPERATURE	–25°C to +70°C (–13°F to +158°F)
ENCLOSURE	MEETS NEMA 1, 3, 4, 6, 13 AND IEC IP67
SHOCK	30 g, 11 ms
VIBRATION	55 Hz, 1 mm AMPLITUDE (IN ALL 3 PLANES)
LED FUNCTION	YELLOW: OUTPUT ENERGIZED
SENSING RANGE	12 mm = .472" (NOMINAL)
SWITCHING FREQUENCY	2000 Hz
REPEATABILITY	≤ 2% of RATED OPERATING DISTANCE
EMBEDDABLE (SHIELDED)	NO
MATING PLUGS/CABLES	4–PIN "EUROFAST" CONSTRUCTION (STAINLESS STEEL)

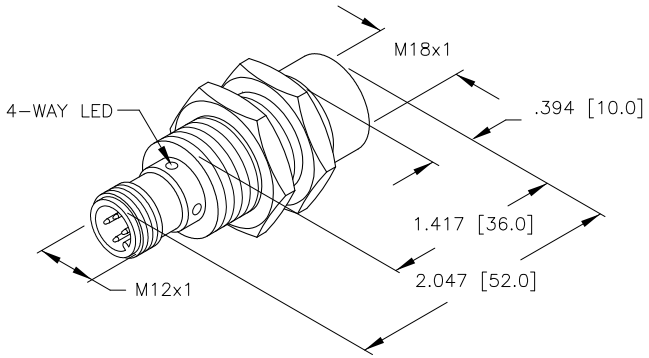

SOURCE DRAWING - FOR REFERENCE ONLY

NOTES:

1. UPROX HAS FIELD IMMUNITY, SENSOR IS SUITABLE FOR USE ON RESISTANCE MACHINES.

2.MATERIALS:

BARREL – STAINLESS STEEL
LOCKNUTS – STAINLESS STEEL
CONNECTOR – STAINLESS STEEEL
SENSING FACE – PA12–GF30 PLASTIC

REV	DESCRIPTION	BY	DATE	ECO NO.
A	DRAWING RELEASE	RDS	07/21/05	

RELATED DOCUMENTS
1.
2.
3.
4.

3RD ANGLE PROJECTION

THIS DRAWING IS PROPERTY OF TURCK INC. USE OF THIS DOCUMENT WITHOUT WRITTEN PERMISSION IS PROHIBITED.

TURCK INC
High Technology Sensors and Automation Controls
3000 CAMPUS DRIVE
MINNEAPOLIS, MN 55441
1–800–544–7769
(763) 553–7300
(763) 553–0708 fax
turck.com

MATERIAL: SEE NOTE 2

FINISH: COPPER/NICKEL CHROME PLATING

ALL DIMENSIONS DISPLAYED ON THIS DRAWING ARE FOR REFERENCE ONLY

CONTACT TURCK FOR MORE INFORMATION

DRFT: RDS | DATE: 07/21/05
DSGN: EH | SCALE: 1=2.0

UNIT OF MEASUREMENT
INCH [MILLIMETER]

DO NOT SCALE THIS DRAWING

DESCRIPTION: NI15U–EM18–AP6X–H1141

IDENTIFICATION NO.: M1635332 | REV: A

FILE: M1635332 | SHEET 1 OF 1