# LPCSL1308

Illuminated selector switch actuator Ø22mm Platinum series chromed plastic, 3 position, 1 - 0 - 2. White



| | | | |
|---|---|---|---|
| Product designation | | | Illuminated selector switch actuator - 3 position |
| Product type designation | | | LPCSL13 |
| **General characteristics** | | | |
| Colour | | | White |
| Type of positions | | | 1 - 0 - 2 |
| Material | | | Polyamide |
| IEC degree of protection | | | IP66, IP67 and IP69K |
| **Mechanical features** | | | |
| Mechanical life | | cycles | 1000000 |
| Fixing | | | Without mounting adapter |
| Mounting adapter | | | LPXAU120 |
| Weight | | g | 25 |
| **UL technical data** | | | |
| UL degree of protection | | | Type1, 2, 3R, 4, 4X, 12, 12K |
| **Ambient conditions** | | | |
| Temperature | | | |
| | Operating temperature | | |
| | min | °C | -25 |
| | max | °C | +70 |
| | Storage temperature | | |
| | min | °C | -40 |
| | max | °C | +85 |

## Dimensions

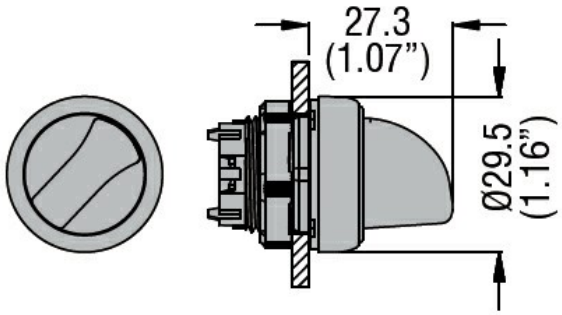


## Certifications and compliance

Compliance

| |
|---|
| CSA C22.2 n° 14 |
| IEC/EN/BS 60947-1 |
| IEC/EN/BS 60947-5-1 |
| UL508 |

Certificates


The characteristics described in this document are subject to updates or modifications at any time. The descriptions, technical and functional information, illustrations and instructions in this brochure are purely illustrative, and are consequently not contractually binding

# LPCSL1308

Illuminated selector switch actuator Ø22mm Platinum series chromed plastic, 3 position, 1 - 0 - 2. White

| |
|---|
| CCC |
| cULus |
| EAC |
| RINA |

## ETIM classification

| | |
|---|---|
| ETIM 8.0 | EC000222 - Front element for selector switch |


The characteristics described in this document are subject to updates or modifications at any time. The descriptions, technical and functional information, illustrations and instructions in this brochure are purely illustrative, and are consequently not contractually binding