Brand of NTN corporation

Technical data

ESFCE207

Bearing units



KIT CONTENT

ES207G2, FCE207

VISUAL (S)

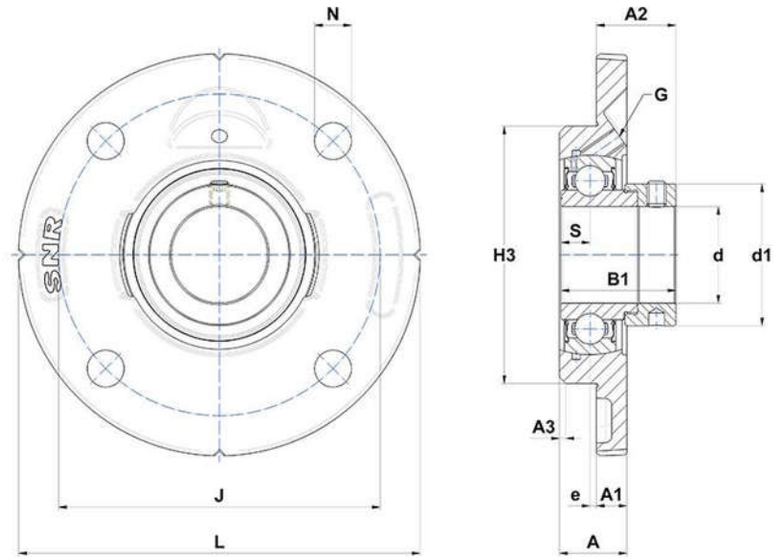

PRODUCT DEFINITION

Brand	SNR
A - Housing height	21 mm
A1 - Housing foot height / flange height	10 mm
A2 - Total height from mounting surface	28,4 mm
A3 - Centering depth / chamfer dimension	2 mm
B - Width of Inner Ring	25,4 mm
B1 - Overall width Inner Ring	38,9 mm

PRODUCT DEFINITION	
d - Shaft diameter	35 mm
d1 - Outer dia of eccent. Lock. collar / nut of adapter sleeve	51,1 mm
e - Distance mounting surface to bearing center	-1 mm
G - Grease fitting	M6x1
H3 - Centering dia	90 mm
J - Mounting holes distance	110 mm
L - Housing width / diameter	135 mm
N - Mounting hole dimension	11,5 mm
S - Distance front side/bearing centre	9,5 mm

PRODUCT PERFORMANCE	
C - Dynamic load rating	25700000 mN
C0 - Static load rating	15200000 mN
Operating temperature min.	253,15 °K
Operating temperature max.	373,15 °K

OTHER FEATURES	
Mass	1,27 kg
Recommended tightening torque for set screw	11.5 N-m