E12777

T-splitter

ZDO2B030ZDS0000-00STGB030ZDS

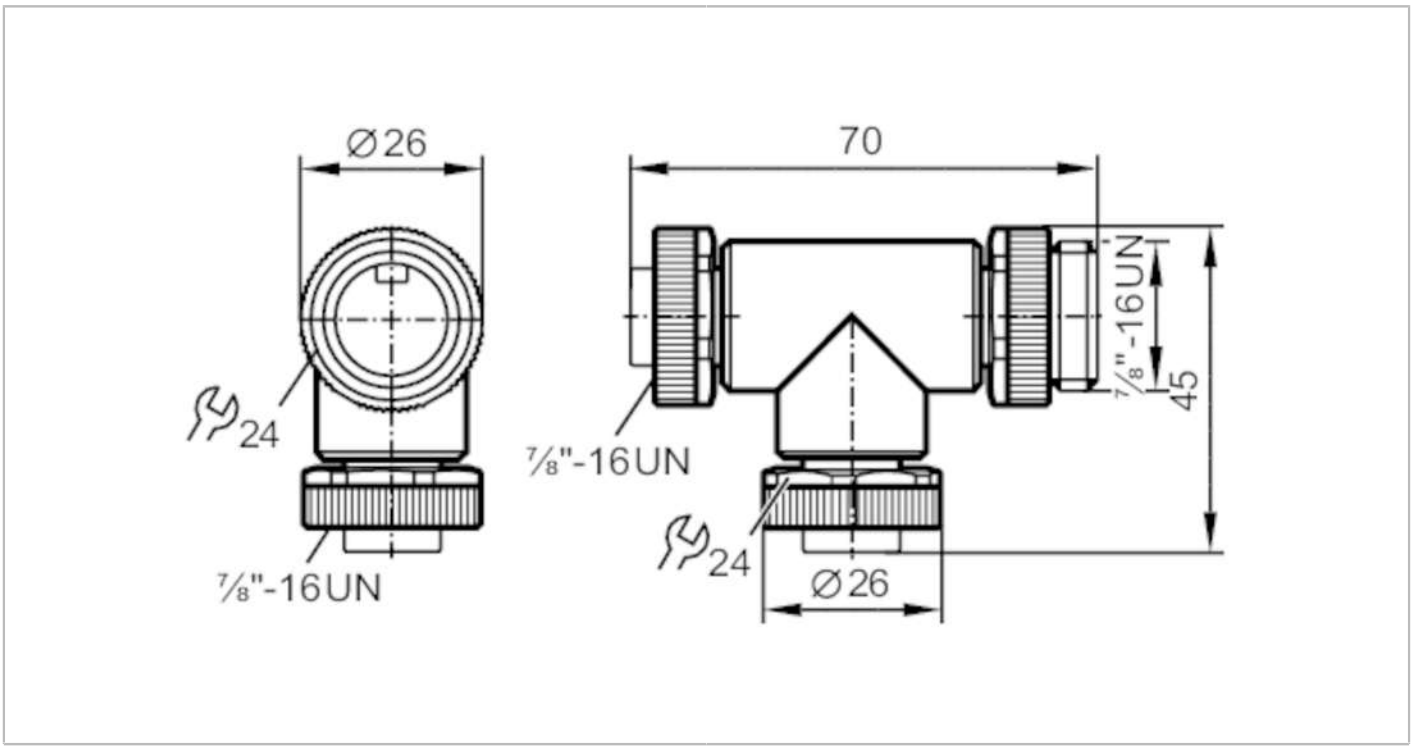

Application		
Special feature		Gold-plated contacts
Electrical data		
Operating voltage	[V]	< 300 AC/DC
Protection class		II
Max. current load total	[A]	10
Operating conditions		
Ambient temperature	[°C]	-30...85
Protection		IP 68
Mechanical data		
Weight	[g]	71.25
Material nut		diecast zinc
Remarks		
Pack quantity		1 pcs.

Electrical connection - plug A

Connector: 7/8"; Locking: diecast zinc; Contacts: gold-plated

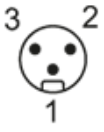

E12777

T-splitter

ZDO2B030ZDS0000-00STGB030ZDS

Electrical connection

Connection

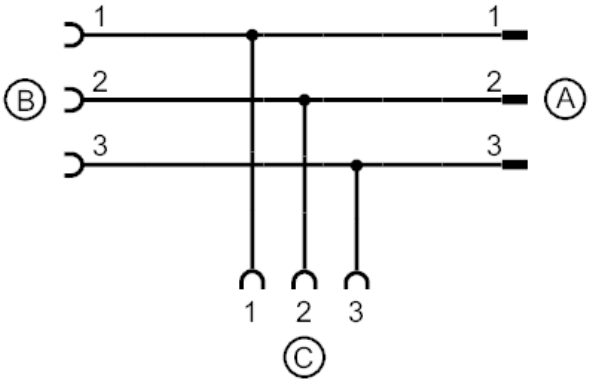

Electrical connection - socket B

Connector: 7/8"; Locking: diecast zinc; Contacts: gold-plated



Electrical connection - socket C

Connector: 7/8"; Locking: diecast zinc; Contacts: gold-plated

