Technical Data Sheet

Document Reference	100
Date of Issue	24th Oct 2024
Revision Number	001
Date of Last Revision	24th Oct 2024

100
Standard Ink Refills



Technical Data Sheet Applicable To:

100-i51	Standard Refill Blue Ink

Industry Usage
These refills are perfect for our HD Retractable, Elephant Retractable, Stainless Steel Retractable and Metal Stick pens and are fully detectable (excluding Ink)

Features and Benefits

- Metal detectable and X-ray visible
- Manufactured from detectable shatter proof plastic
- Writing length approx. 9,400M (30,840”)
- Fully detectable housing and end cap

- For ambient conditions between 0°c and 30°c (32 to 86°f)
- Writing line width 1mm (39.4mils)

Material and Compliance Information:

The above is manufactured using pigments which are in accordance with: -

- European Resolution AP (89) 1
- Recommendation IX of the BfR for colouring plastics
- EN71-3 Toy regulation
- EU regulation EU No 2019/1381 amending Regulation EU No 1935/2004
- Is based on a polymer carrier that is compliant with: -
- EU regulation EU No 2020/1245 amending and correcting Regulation (EU) No 10/2011
- EU regulation EU No 2019/1381 amending Regulation EU No 1935/2004

• Has been produced according to Regulation 2023/2006/EC on good manufacturing practice for materials and articles intended to come into contact with food, applicable to plastic raw materials.

This compliance statement is based on information supplied by the polymer and pigment manufacturers, migration testing according to Regulation 10/2011, migration modelling and quality control systems in place at Detectamet.

REACH – No substances of very high concern (SVHC) above the 0.1% weight (w/w) threshold limit are present in the materials.

Regulations and Standards

We confirm that the above-mentioned products are suitable for use in contact with all food types and are in conformity with the applicable requirements of the following regulations and standards:

• Regulation (EC) no.1935/2004 on Materials and Articles intended to come into contact with food.

• Commission Regulation (EU) No.10/2011 on Plastic materials intended to come into contact with food including its updates Regulation 1282/2011 and Regulation 1183/2012.

• Regulation (EC) no. 2023/2006 on Good Manufacturing Practice for materials and articles intended to come into contact with food.

• Council of Europe Resolution AP 89/1 on the use of Colorants in Plastic Materials coming into contact with food.

• US FDA 21 CFR 177.1520 (Olefin polymers) with colorants and additives cleared for use through listing in 178.3297 (Colorants for polymers), 178.2010 (antioxidants and/or stabilisers for polymers, or other respective parts of the FDA regulations.

Migration test data obtained under short-term repeat use test conditions (6dm2/kg food) has demonstrated that levels of overall migration and specific migration of additives from these products will not exceed the legal limits with all food types.

Test Simulants	Food Types	Testing Condition
A-C, D1, D2 of Regulation No. 10,2011 for Plastic Materials and Articles in contact with food.	All dry, aqueous, acidic, alcoholic and fatty foods.	2 hours at 70C, Repeat use. Test OM3 of regulation 10/2011

2 hours at 70C, Repeat use. Test OM3 of regulation 10/2011

Dual-use food additives may be present but any migration into food will be minimal.

This compliance statement is based on information supplied by the polymer and pigment manufacturers, migration testing according to Regulation 10/2011, migration modelling and quality control systems in place at Detectamet.

General Information:

Maximum use Temperature: 100

°c Maximum wash Temperature:

121 °c

Maximum use Temperature: Do not store at deep freeze temperatures prior to use.

Cleaning:

It is recommended that prior to and after use, scrapers are cleaned, disinfected & sterilized, as appropriate to their intended use (to minimise risk of microbial Growth and cross contamination, maximizing their efficiency and durability).

Refill Flight

The above is manufactured using pigments which are in accordance with: -

- Is manufactured using pigments which are in accordance with
- European Resolution AP (89) 1
- Recommendation IX of the BfR for colouring plastics
- Is manufactured using pigments which are compliant to –
- EN71-3 Toy regulation
- Is based on a polymer carrier that is compliant with: -
- EU regulation EU No 10/2011 as amended

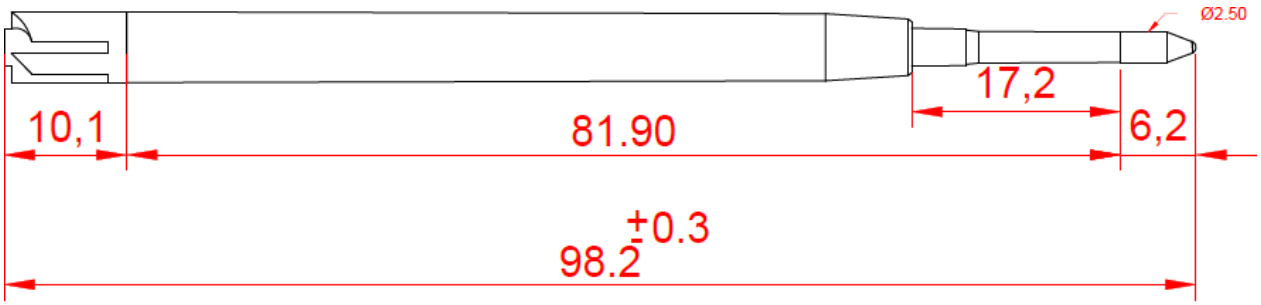

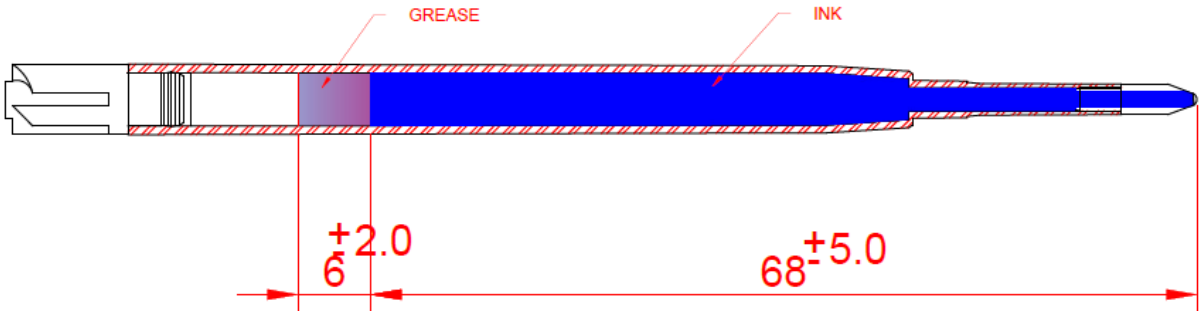

All dimensions are in mm

Refill Ink

1. Hazards identification

Classification of the substance or mixture

GHS05 Corrosion



Skin Corr. 1B H314 Causes severe skin burns and eye damage. Eye Dam. 1 H318 Causes serious eye damage.

GHS07 Low level toxicity



Skin Sens. 1 H317 May cause an allergic skin reaction.

Aquatic Chronic 3 H412 Harmful to aquatic life with long lasting effects.

- Classification according to Directive 67/548/EEC or Directive 1999/45/EC Not applicable.

- Information concerning particular hazards for human and environment:

The product has to be labelled due to the calculation procedure of international guidelines.

- Classification system:

The classification was made according to the latest GHS editions of international substances lists and expanded upon from company and literature data.

Label elements

- Labelling according to GH guidelines:

The product has been classified and marked in accordance with GHS directives on hazardous materials.

- Hazard-determining components of labelling: alpha,alpha-bis[4-(dimethylamino)phenyl]-4 (phenylamino)naphthalene-1-methanol 2-Phenoxyethanol
  Phosphoric acid, mono- and bis(2-ethylhexyl) esters.

Safety phrases:

- Keep locked up and out of the reach of children.
- In case of contact with eyes, rinse immediately with plenty of water and seek medical advice. Do not empty into drains, dispose of this material and its container at hazardous or special waste collection point.
- Wear suitable protective clothing, gloves, and eye/face protection.
- In case of accident or if you feel unwell, seek medical advice immediately (show the label where possible).

Classification system:

NFPA ratings (scale 0 - 4)

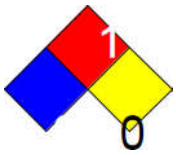

Health = 3

Fire = 1

Reactivity = 0

HMIS-ratings (scale 0 - 4)

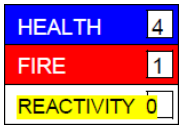

Health = 4

Fire = 1

Reactivity = 0

Other hazards:

Results of PBT and vPvB assessment

- PBT: Not applicable.
- vPvB: Not applicable.

Mixtures

The product does not contain substances classified as being hazardous to human health or the environment pursuant to the provisions Regulation (EU) 1272/2008 (CLP) (and subsequent amendments and supplements) in such quantities as to require the statement.

2. Composition/information on ingredients

- Chemical characterization: Mixtures
- Description: Mixture: consisting of the following components.

Dangerous Components:		
122-99-6	2-Phenoxyethanol	36-42%
90506-69-7	Phosphoric acid, mono- and bis(2- ethylhexyl) esters	8-11%
100-51-6	Benzyl alcohol	5-7%
6786-83-0	alpha,alpha-bis[4-(dimethylamino)phenyl]-4-(phenylamino)naphthalene-1-methanol	3-5%
100-98-5	1,1'-oxydipropan-2-ol	0.5-1.5%
112-90-3	(Z)-octadec-9-enylamine	0.5-1.5%
Non-Dangerous Components:		
9003-39-8	Polyvinyl pyrrolidone	0-3%
25054-06-2	Formaldehyde, polymer with cyclohexanone	25-30%
52080-58-7	C. I. Solvent Violet 8	8-11%

111-90-0	2-(2-ethoxyethoxy)ethanol	1-2.5%
SVHC:		
6786-83-0	alpha,alpha-bis[4-(dimethylamino)phenyl]-4-(phenylamino)naphthalene-1-	

3. First aid measures

Description of first aid measures

- *General information:*

Symptoms of poisoning may even occur after several hours; therefore, medical observation for at least 48 hours after the accident.

- *After inhalation:*

Supply fresh air and to be sure call for a doctor.
In case of unconsciousness place patient stably in side position for transportation.

- *After skin contact:*

Immediately wash with water and soap and rinse thoroughly. If skin irritation continues, consult a doctor.

- *After eye contact:*

Rinse opened eye for several minutes under running water. If symptoms persist, consult a doctor.

- *After swallowing:*

Never give anything by mouth to an unconscious person. Rinse mouth with water. Consult a physician.
· Most important symptoms and effects, both acute and delayed
No further relevant information available.

- *Information for doctor:*

Treat symptomatically and supportively.

- *Indication of any immediate medical attention and special treatment needed*

No further relevant information available.

4. Firefighting measures

Extinguishing media

- Suitable extinguishing agents:

Use firefighting measures that suit the environment.
CO2, extinguishing powder, or water spray. Fight larger fires with water spray or alcohol resistant foam.

- Special hazards arising from the substance or mixture.

In case of fire, the following can be released:
Carbon monoxide (CO)
Carbon dioxide (CO2)

- *·Advice for firefighters*

Wear self-contained breathing apparatus for firefighting if necessary.

5. Accidental release measures

- Personal precautions, protective equipment and emergency procedures

Wear protective equipment. Keep unprotected persons away.
Ensure adequate ventilation

- Environmental precautions

Do not allow to enter sewers/ surface or ground water.

- Methods and material for containment and cleaning up:

Absorb with liquid-binding material (sand, diatomite, acid binders, universal binders, sawdust).

Keep in suitable, closed containers for disposal. Ensure adequate ventilation.

- Reference to other sections

See Section 7 for information on safe handling.

See Section 8 for information on personal protection equipment.

See Section 13 for disposal information.

6. Handling and storage

- Precautions for safe handling

Ensure good ventilation/exhaustion at the workplace. Prevent formation of aerosols.

- Information about protection against explosions and fires:

Keep ignition sources away - Do not smoke.

- Conditions for safe storage, including any incompatibilities.
  · Storage:
  ·Requirements to be met by storerooms and receptacles:

Store in a cool, dry, well-ventilated area away from incompatible substances.

- Information about storage in one common storage facility:

Store away from incompatible materials.

- Further information about storage conditions:

Keep receptacle tightly sealed.

- Specific end use(s)

Used as inks for sketch pens, fine liners, and all kinds of writing instruments.

7. Exposure controls/personal protection

- *Additional information about design of technical systems:*

No further data; see item 7.

- *Control parameters*

Components with limit values that require monitoring at the workplace:	
100-51-6 Benzyl alcohol	
WEEL	Long-term value: 10 ppm
111-90-0 2-(2-ethoxyethoxy)ethanol	
WEEL	Long-term value: 25 ppm

- Exposure controls
- Personal protective equipment:
- *General protective and hygienic measures:*

Keep away from foodstuffs, beverages, and feed. Immediately remove all soiled and contaminated clothing. Wash hands before breaks and at the end of work.
Avoid contact with the eyes and skin.

- Breathing equipment:

In case of brief exposure or low pollution use respiratory filter device. In case of intensive or longer exposure use respiratory protective device that is independent of circulating air.

- Protection of hands:



Protective gloves

The glove material has to be impermeable and resistant to the product/ the substance/ the preparation.
Due to missing tests no recommendation to the glove material can be given for the product/ the preparation/ the chemical mixture.

Selection of the glove material on consideration of the penetration times, rates of diffusion and the degradation

- *Material of gloves:*

The selection of the suitable gloves does not only depend on the material, but also on further marks of quality and varies from manufacturer to manufacturer. As the product is a preparation of several substances, the resistance of the glove material cannot be calculated in advance and has therefore to be checked prior to the application.

- *Penetration time of glove material:*

The exact break through time has to be found out by the manufacturer of the protective gloves and has to be observed.

- *Eye protection:*



Tightly sealed goggles

- *Body protection:*

Protective work clothing

8. Physical and chemical properties

· Information on basic physical and chemical properties · General Information Appearance: Form: Colour: Odor:	Fluid According to product specification Characteristic
Change in condition. Melting point/Melting range: Boiling point/Boiling range:	Undetermined. 205 °C (401 °F)
Flash point:	101 °C (214 °F)
Ignition temperature:	435 °C (815 °F)
Auto igniting:	Product is not self igniting.
Danger of explosion:	Product does not present an explosion hazard.
Vapor pressure at 20 °C (68 °F):	0.1 hPa
Density:	Not determined.
Solubility in / Miscibility with Water:	Not miscible or difficult to mix.
Partition coefficient (n-octanol/water):	Not determined.
Viscosity: Dynamic: · Other information	Not determined. No further relevant information available.

9. Stability and reactivity

- Reactivity
- Chemical stability
- Thermal decomposition / conditions to be avoided:

No decomposition if used according to specifications.

- *Possibility of hazardous reactions*

Hazardous polymerisation will not occur

- *Conditions to avoid*

No further relevant information available.

- *Incompatible materials:*

Avoid contact with strong oxidizing agents.

- *Hazardous decomposition products:*

Carbon monoxide and carbon dioxide

10. Toxicological Information

Information on toxicological effects

· Acute toxicity:

LD/LC50 values that are relevant for classification:		
122-99-6 2-Phenoxyethanol		
Oral Dermal	LD50 LD50	2740 mg/kg (rat) 5000 mg/kg (rabbit)
100-51-6 Benzyl alcohol		
Oral Dermal	LD50 LD50	1230 mg/kg (rat) 2000 mg/kg (rabbit)
6786-83-0 alpha,alpha-bis[4-(dimethylamino)phenyl]-4-(phenylamino)naphthalene-1-methanol		
Oral Dermal	LD50 LD50	2000 mg/kg bw(rat(Wistar)female) 2000 mg/kg bw (rat(Wistar)male/female)

- Primary irritant effect:

- on the skin: Irritating effect
- on the eye: Irritating effect.

CAS: 6786-83-0

The substance was found to cause fully irreversible effects to rabbit eye in a study performed as per OECD guideline no. 405

- Sensitization:

Sensitization possible through skin contact. CAS: 6786-83-0

The substance was found to be sensitising in a Guinea pig maximisation test.

- Additional toxicological information:

The product shows the following dangers according to internally approved calculation methods for preparations:

Harmful Irritant

- Carcinogenic categories

IARC (International Agency for Research on Cancer)
None of the ingredients is listed.
NTP (National Toxicology Program)
None of the ingredients is listed.
OSHA-Ca (Occupational Safety & Health Administration)
None of the ingredients is listed.

11. Ecological information

Toxicity

- *Aquatic toxicity:*
-

Justification for aquatic classification:
As the substance Oleyl Amine (CAS No. 112-90-3), having classification as Aquatic Acute 1 and Aquatic chronic 1, contributes only 1% in the final mixture, so the classification of mixture is considered as Aquatic Chronic 3.

- Persistence and degradability No further relevant information available.
- Bioaccumulative potential No further relevant information available.
- Mobility in soil No further relevant information available.
- *Additional ecological information:*
- General notes:

Do not allow product to reach ground water, water course or sewage system. Danger to drinking water if even small quantities leak into the ground.
· Results of PBT and vPvB assessment
· PBT: Not applicable.
· vPvB: Not applicable.
· Other adverse effects No further relevant information available.

12. Disposal considerations

- Waste treatment methods
- Recommendation:
-

Dispose of waste material according to local, state and federal regulations.

Uncleaned packaging:

- Recommendation: Disposal must be made according to official regulations.

13. Transport information

UN-Number · DOT, ADR, IMDG, IATA	UN1760
UN proper shipping name DOT	Corrosive liquids, n.o.s. (Phosphoric acid, m o no - an d b is (2- et h yl hex yl) es t e r s, (Z) - octadec-9-enylamine)
ADR	1760 Corrosive liquids, n.o.s. (Phosphoric acid, mono- and bis(2-ethylhexyl) esters, (Z)- octadec-9-enylamine)
IMDG, IATA	CORROSIVE LIQUID, N.O.S. (Phosphoric acid, mono- and bis(2- ethylhexyl) esters, (Z)- octadec-9-enylamine)
Transport hazard class(es) DOT  Class Label	8 Corrosive substances 8

ADR, IMDG, IATA  Class Label	8 Corrosive substances 8

Packing group DOT, ADR, IMDG, IATA	III
Environmental hazards: Marine pollutant:	No
Special precautions for user Danger code (Kemler): EMS Number: Segregation groups Transport in bulk according to Annex II of MARPOL73/78 and the IBC Code Transport/Additional information: DOT Quantity limitations	Warning: Corrosive substances 80 F-A,S-B Acids On passenger aircraft/rail: 5 L On cargo aircraft only: 60 L
ADR ·Excepted quantities (EQ)	Code: E1 Maximum net quantity per inner packaging: 30ml Maximum net quantity per outer packaging: 1000 ml
IMDG Limited quantities (LQ)	5L
Excepted quantities (EQ)	Code: E1 Maximum net quantity per inner packaging: 30 ml Maximum net quantity per outer packaging: 1000 ml
UN "Model Regulation":	UN1760, Corrosive liquids, n.o.s. (Phosphoric acid, mono- and bis(2-ethylhexyl) esters, (Z)-octadec-9-enylamine), 8, III

14. Regulatory Information

- Safety, health and environmental regulations/legislation specific for the substance or mixture
- Sara

Section 355 (extremely hazardous substances): None of the ingredients is listed.	
Section 313 (Specific toxic chemical listings): None of the ingredients is listed.	
TSCA (Toxic Substances Control Act):	
122-99-6	2-Phenoxyethanol
25054-06-2	Formaldehyde, polymer with cyclohexanone
100-51-6	Benzyl alcohol
52080-58-7	C. I. Solvent Violet 8
111-90-0	2-(2-ethoxyethoxy)ethanol
110-98-5	1,1'-oxydipropan-2-ol
6786-83-0	alpha,alpha-bis[4-(dimethylamino)phenyl]-4-(phenylamino)naphthalene-1-methanol
112-90-3	(Z)-octadec-9-enylamine
9003-39-8	Polyvinyl pyrrolidone

- Proposition 65

Chemicals known to cause cancer:
None of the ingredients is listed.
Chemicals known to cause reproductive toxicity for females:
None of the ingredients is listed.
Chemicals known to cause reproductive toxicity for males:
None of the ingredients is listed.
Chemicals known to cause developmental toxicity:
None of the ingredients is listed.

- Carcinogenic categories

EPA (Environmental Protection Agency)
None of the ingredients is listed.
TLV (Threshold Limit Value established by ACGIH)
TLV (ACGIH):1000 ppm.
NIOSH-Ca (National Institute for Occupational Safety and Health)
None of the ingredients is listed.

- Product related hazard information's:

The product has been classified and marked in accordance with directives on hazardous materials.

· Hazard-determining components of labeling:

alpha,alpha-bis[4-(dimethylamino)phenyl]-4-(phenylamino)naphthalene-1-methanol 2- Phenoxyethanol. Phosphoric acid, mono- and bis(2-ethylhexyl) esters.

· Safety phrases:

Keep locked up and out of the reach of children.
In case of contact with eyes, rinse immediately with plenty of water and seek medical advice. Do not empty into drains, dispose of this material and its container at hazardous or special waste collection point.
Wear suitable protective clothing, gloves and eye/face protection.
In case of accident or if you feel unwell, seek medical advice immediately (show the label where possible).

· *National regulations:*

· Other regulations, limitations, and prohibitive regulations
User to follow national laws and regulations.

Other Information

Abbreviations:
ICAO: International Civil Aviation Organisation
ICAO-TI: Technical Instructions by the "International Civil Aviation Organisation" (ICAO) ADR: Accord européen sur le transport des marchandises dangereuses par Route (European Agreement concerning the International Carriage of Dangerous Goods by Road)
IMDG: International Maritime Code for Dangerous Goods DOT:
US Department of Transportation
IATA: International Air Transport Association
ACGIH: American Conference of Governmental Industrial Hygienists EINECS:
European Inventory of Existing Commercial Chemical Substances ELINCS:
European List of Notified Chemical Substances
CAS: Chemical Abstracts Service (division of the American Chemical Society) NFPA:
National Fire Protection Association (USA)
HMIS: Hazardous Materials Identification System (USA) LC50:
Lethal concentration, 50 percent
LD50: Lethal dose, 50 percent
Skin Corr. 1B: Skin corrosion/irritation, Hazard Category 1B
Eye Dam. 1: Serious eye damage/eye irritation, Hazard Category 1 Skin Sens.
1: Sensitisation - Skin, Hazard Category 1
Aquatic Chronic 3: Hazardous to the aquatic environment - Chronic Hazard, Category 3

Sources

• Occupational Safety & Health Administration (OSHA)
https://www.osha.gov/Publications/OSHA3514.html

• Data from registration Dossier for CAS: 6786-83-0 published on ECHA website
http://apps.echa.europa.eu/registered/data/dossiers/DISS-d6b29d59-d4e7-5966-e044-00144f67d031/DISS-d6b29d59-d4e7-5966-e044-00144f67d031 DISS-d6b29d59-d4e7-5966-e044-00144f67d031.html

Note for users:

The information contained in the present sheet are based on our own knowledge on the date of the last version. Users must verify the suitability and thoroughness of provided information according to each specific use of the product. This document must not be regarded as a guarantee on any specific product property. The use of this product is not subject to our direct control; therefore, users must, under their own responsibility, comply with the current health and safety laws and regulations. The producer is relieved from any liability arising from improper uses. Provide appointed staff with adequate training on how to use chemical products.

Standard Refill Tip

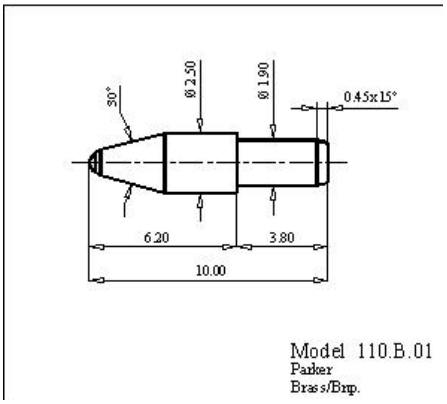

1.00 mm BNP/TC

It is recommended that prior to and after use, scrapers are cleaned, disinfected & sterilised, as appropriate to their intended use (to minimise risk of microbial Growth and cross contamination, maximising their efficiency and durability).

No warranty is given or implied with respect to this information or patent infringement. Detectamet Ltd do not accept liability for loss or damage arising from the use of this information. Results are based on a test sample, our general experience and information from suppliers. Data and results may be confirmed by the buyer by testing for its intended conditions of use.

Safety You Detect

detectamet.global