BL68 - Olympian Plus, plug-in system Filter/regulators and lubricators

— Port size: 3/4" ... 1 1/2" (ISO G/ PTF)

— Complete air processing units pre-assembled, ready to install



Technical features

Medium:
Compressed air only

Maximum operating pressure:
17 bar (246 psi)

Pressure range:
0,4 ... 8 bar (5 ... 116 psi)

Port sizes:
G3/4, G1, G1 1/4 or G1 1/2

Gauge ports:
Rc 1/8

Relieving: Standard

Filter element:
40 µm

Drain:
Manual or automatic

Automatic drain conditions:
Pressure to close drain:
> 0,3 bar (4.3 psi)
Pressure to open drain:
< 0,2 bar (2.9 psi)
Minimum air flow to close drain:
0,6 dm3/s (1.3 scfm)

Bowl size (lubricator):
0,5 litre (17 fluid oz)

Ambient/Media temperature:
-20° ... +80°C (-4° ... +176°F)
Version with gauge:
-20° ... +65°C (-4° ... +149°F)
Air supply must be dry enough to avoid ice formation at temperatures below +2°C (+35°F).

Materials:
Body, bowl and yoke: Aluminium
Liquid level indicator: Pyrex
Filter element: Sintered plastic
Elastomers: NBR

Available versions on request

Pressure range:
0,3 ... 4 bar (4 ... 58 psi),
0,7 ... 17 bar (10 ... 246 psi)

Port size:
3/4 PTF, 1 PTF, 1 1/4 PTF, 1 1/2 PTF

Element:
5 µm

Technical data BL68 - standard models; automatic drain

Symbol	Port size	Size	Pressure range (bar)	Element (µm)	Drain	Lubricator	Mounting	Gauge	Shut-off valve	Model
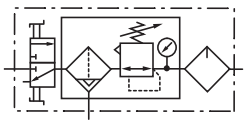	G3/4	–	0,4 ... 8	40	Automatic	Micro fog	Bracket	With	With	BL68-601
	G1	Basic	0,4 ... 8	40	Automatic	Micro fog	Bracket	With	With	BL68-801
	G1 1/4	–	0,4 ... 8	40	Automatic	Micro fog	Bracket	With	With	BL68-A01
	G1 1/2	–	0,4 ... 8	40	Automatic	Micro fog	Bracket	With	With	BL68-B01
	G3/4	–	0,4 ... 8	40	Automatic	Oil fog	Bracket	With	With	BL68-611
	G1	Basic	0,4 ... 8	40	Automatic	Oil fog	Bracket	With	With	BL68-811
	G1 1/4	–	0,4 ... 8	40	Automatic	Oil fog	Bracket	With	With	BL68-A11
	G1 1/2	–	0,4 ... 8	40	Automatic	Oil fog	Bracket	With	With	BL68-B12
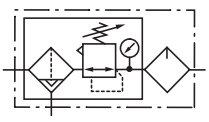	G3/4	–	0,4 ... 8	40	Automatic	Micro fog	Bracket	With	Without	BL68-605
	G1	Basic	0,4 ... 8	40	Automatic	Micro fog	Bracket	With	Without	BL68-805
	G1 1/4	–	0,4 ... 8	40	Automatic	Micro fog	Bracket	With	Without	BL68-A05
	G1 1/2	–	0,4 ... 8	40	Automatic	Micro fog	Bracket	With	Without	BL68-B06
	G3/4	–	0,4 ... 8	40	Automatic	Oil fog	Bracket	With	Without	BL68-615
	G1	Basic	0,4 ... 8	40	Automatic	Oil fog	Bracket	With	Without	BL68-815
	G1 1/4	–	0,4 ... 8	40	Automatic	Oil fog	Bracket	With	Without	BL68-A15
	G1 1/2	–	0,4 ... 8	40	Automatic	Oil fog	Bracket	With	Without	BL68-B16

Our policy is one of continued research and development. We therefore reserve the right to amend, without notice, the specifications given in this document. (2001 - 8099f) © 2024 IMI International s.r.o.

Technical data BL68 - standard models, manual drain

Symbol	Port size	Size	Pressure range (bar)	Element (µm)	Drain	Lubricator	Mounting	Gauge	Shut-off valve	Model
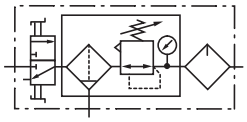	G3/4	–	0,4 ... 8	40	Manual	Micro fog	Bracket	With	With	BL68-621
	G1	Basic	0,4 ... 8	40	Manual	Micro fog	Bracket	With	With	BL68-821
	G1 1/4	–	0,4 ... 8	40	Manual	Micro fog	Bracket	With	With	BL68-A21
	G1 1/2	–	0,4 ... 8	40	Manual	Micro fog	Bracket	With	With	BL68-B22
	G3/4	–	0,4 ... 8	40	Manual	Oil fog	Bracket	With	With	BL68-631
	G1	Basic	0,4 ... 8	40	Manual	Oil fog	Bracket	With	With	BL68-831
	G1 1/4	–	0,4 ... 8	40	Manual	Oil fog	Bracket	With	With	BL68-A31
	G1 1/2	–	0,4 ... 8	40	Manual	Oil fog	Bracket	With	With	BL68-B32
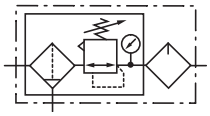	G3/4	–	0,4 ... 8	40	Manual	Micro fog	Bracket	With	Without	BL68-625
	G1	Basic	0,4 ... 8	40	Manual	Micro fog	Bracket	With	Without	BL68-825
	G1 1/4	–	0,4 ... 8	40	Manual	Micro fog	Bracket	With	Without	BL68-A25
	G1 1/2	–	0,4 ... 8	40	Manual	Micro fog	Bracket	With	Without	BL68-B26
	G3/4	–	0,4 ... 8	40	Manual	Oil fog	Bracket	With	Without	BL68-635
	G1	Basic	0,4 ... 8	40	Manual	Oil fog	Bracket	With	Without	BL68-835
	G1 1/4	–	0,4 ... 8	40	Manual	Oil fog	Bracket	With	Without	BL68-A35
	G1 1/2	–	0,4 ... 8	40	Manual	Oil fog	Bracket	With	Without	BL68-B36

Accessories

Thread	3/2 Shut-off valve Threaded inlet only	Threaded outlet only	Bracket mounting
			
G3/4	T68H-6GB-B2N	T68H-6GC-B2N	18-001-979
G1	T68H-8GB-B2N	T68H-8GC-B2N	18-001-979
G1 1/4	T68H-AGB-B2N	T68H-AGC-B2N	18-001-978
G1 1/2	T68H-BGB-B2N	T68H-BGC-B2N	18-001-972
3/4 PTF	T68H-6AB-B2N	T68H-6AC-B2N	18-001-979
1 PTF	T68H-8AB-B2N	T68H-8AC-B2N	18-001-979
1 1/4 PTF	T68H-AAB-B2N	T68H-AAC-B2N	18-001-978
1 1/2 PTF	T68H-BAB-B2N	T68H-BAC-B2N	18-001-972

Tamper resistant cap & seal wire	Porting block	Padlock with two keys
		
4355-51	18-026-986 (G1/4 & G1/2)	0613633 (brass)
	18-026-983 (1/4 & 1/2 NPT)	

Our policy is one of continued research and development. We therefore reserve the right to amend, without notice, the specifications given in this document. (2001 - 8099f) © 2024 IMI International s.r.o.

Dimensions with shut-off valve

Dimensions in mm
Projection/First angle

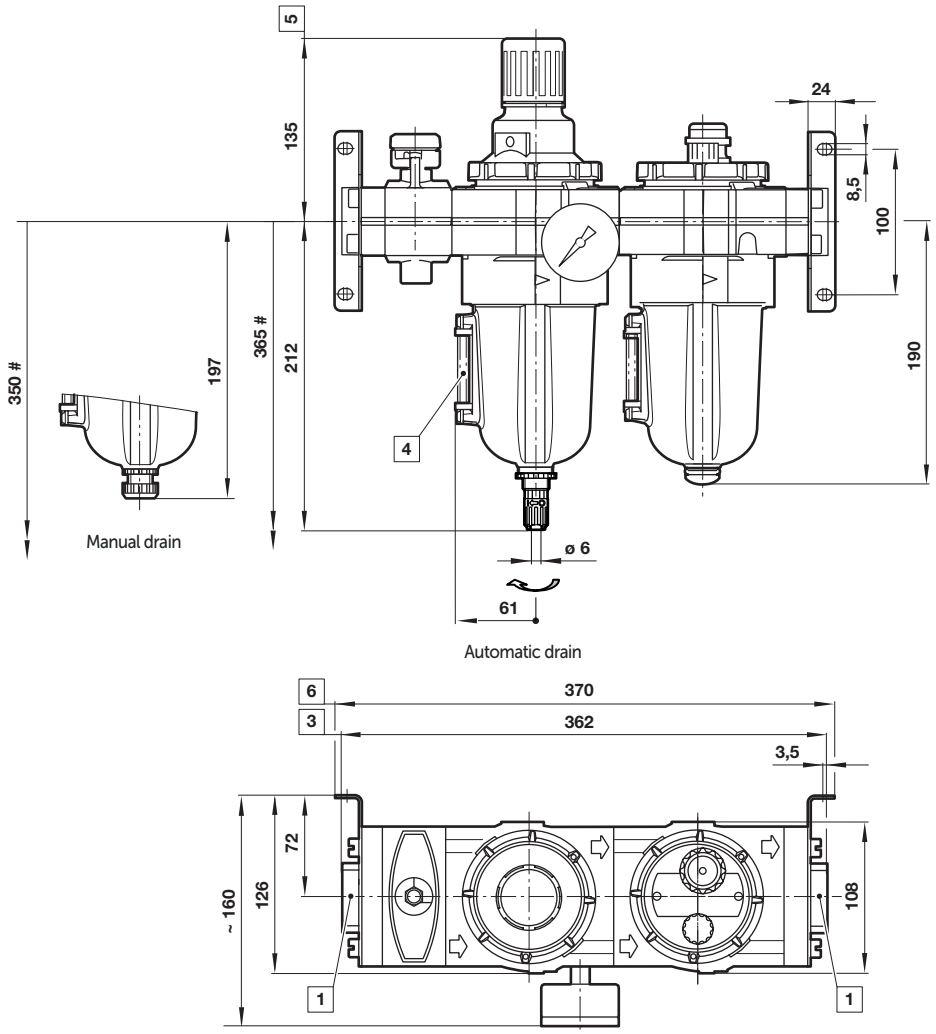

Minimum clearance required to remove bowl
1 Main ports 3/4", 1", 1 1/4" or 1 1/2"
3 Plus 10 mm for ports 1 1/4" or 1 1/2"
4 Sight glass
5 Reduces by 4 mm with knob in locked position
6 Plus 10 mm for ports 1 1/4"

Our policy is one of continued research and development. We therefore reserve the right to amend, without notice, the specifications given in this document. (2001 - 8099f) © 2024 IMI International s.r.o.

Dimensions without shut-off valve

Dimensions in mm
Projection/First angle

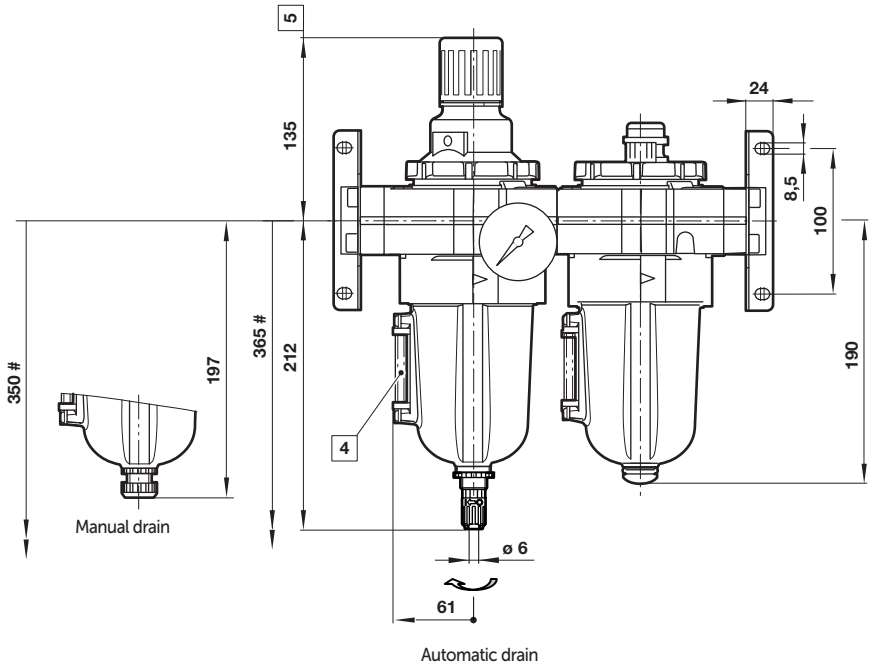

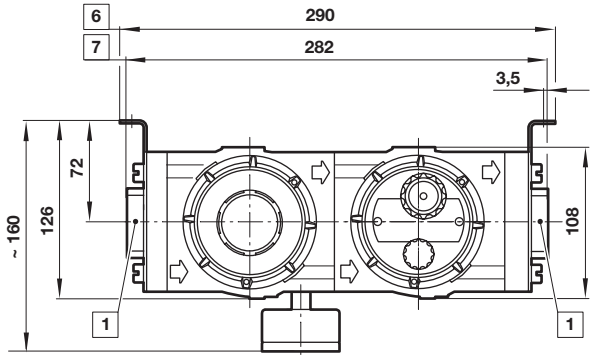

Minimum clearance required to remove bowl
1 Main ports 3/4", 1", 1 1/4" or 1 1/2"
4 Sight glass
5 Reduces by 4 mm with knob in locked position
6 Plus 10 mm for ports 1 1/4"
7 Plus 10 mm for ports 1 1/4" and 5 mm for 1 1/2"

3/2 Shut-off valve

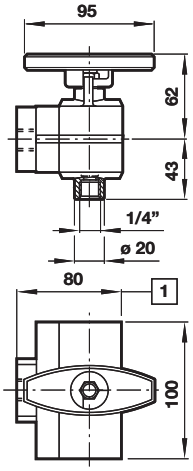

1 For 1 1/2" ported yokes add 5 mm

Porting block

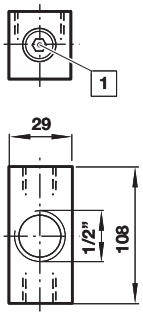

1 Two additional plugged 1/4" ports

Our policy is one of continued research and development. We therefore reserve the right to amend, without notice, the specifications given in this document. (2001 - 8099f) © 2024 IMI International s.r.o.

Warning

These products are intended for use in industrial compressed air systems only. Do not use these products where pressures and temperatures can exceed those listed under »Technical features/ data«.

Before using these products with fluids other than those specified, for non-industrial applications, life-support systems or other applications not within published specifications, consult Norgren.

Through misuse, age, or malfunction, components used in fluid power systems can fail in various modes.

The system designer is warned to consider the failure modes of all component parts used in fluid power systems and to provide adequate safeguards to prevent personal injury or damage to equipment in the event of such failure.

System designers must provide a warning to end users in the system instructional manual if protection against a failure mode cannot be adequately provided.

System designers and end users are cautioned to review specific warnings found in instruction sheets packed and shipped with these products.

Our policy is one of continued research and development. We therefore reserve the right to amend, without notice, the specifications given in this document. (2001 - 8099f) © 2024 IMI International s.r.o.