PNP Series
Sealed Pushbutton Switch

Features/Benefits

- *IP68 sealed to endure harsh environments*
- *1,000,000 life cycle*
- *Longer solder leads for ease of wire installation*
- *Multiple housing styles*
- *Up to 5A resistive load*
- *Wirelead options available*
- *RoHS compliant*

Typical Applications

- *Control Grips*
- *Off-Road Panels*
- *Heavy Equipment*
- *Industrial Instruments*
- *Lifts*
- *Conveyor Controls*



Specifications

FUNCTION: SPST, SPDT Double Break (Form Z) Momentary
CONTACT ARRANGEMENT: N.O. and N.C.
MOUNTING TYPE: Threaded front mount
TORQUE SPEC FOR THREADED BODY: Do not exceed 10 in-lbs (1.35 N-m)

Mechanical

OPERATING LIFE: 1,000,000 cycles
TOTAL TRAVEL: 2 mm max.
OPERATING POINT 0.9 ± 0.25 mm
OVER TRAVEL: 0.25 mm min.
OPERATING FORCE: 8N ± 1.5N
VIBRATION: 10-500 Hz 10g Max
SHOCK: 50g 11ms sawtooth wave

Electrical

CONTACT RATING:
Option "Q" Silver
5A/32 VDC resistive (25,000 cycles)
3A/32 VDC resistive (25,000 cycles)
Option "G" Gold over Silver
10mA/5 VDC resistive (1,000,000 cycles)

DIELECTRIC STRENGTH: 1000 V AC for 1 min.
INSULATION RESISTANCE: 1 G Ω @ 500 VDC
INITIAL CONTACT RESISTANCE 50 mΩ max (without wire leads)
BOUNCE TIME: <5 ms

Materials

HOUSING: PBT/PC
BASE: PBT
CAP: PBT
ACTUATOR: PBT
INTERNAL SEAL: Silicone rubber
TERMINALS: Copper with silver nickel inlay, silver plating
MOVABLE CONTACT: Copper alloy, gold over silver plating
TERMINAL SEAL: Epoxy

Operating Environment

OPERATING TEMPERATURE: -40˚C to +85˚C
ESD PROTECTION: 15KV min.

Process Environment

SEALING: IP68

NOTE: Specifications and materials listed above are for switches with standard options. For information on specific and custom switches, please contact Customer Service.

Build-A-Switch

To order, simply select desired option from each category and place in the appropriate box.

P	N	P		8					2					E

Designation
PNP PNP Series

Operating Force
8 8 Newtons

Actuator Style
S Standard
E Extended (D housing style only)

Actuator Color *
2 Black (STD)
3 Red
5 Yellow

Housing Style
T Standard threaded mount
D Dome bezel

Housing Color
2 Black (STD)

Circuit
C SPDT - Double Break
W SPST NC - Double Break
Y SPST NO - Double Break

Termination
02 PC Pin (G contact material only)
03 Solder Lug (STD)
W2 2 x 12" 22 AWG UL1569 wire (overmolded)
W3 3 x 12" 22 AWG UL1569 wire (overmolded)
W4 4 x 12" 22 AWG UL1569 wire (overmolded)

Contact Material
Q Silver (STD)
G Gold over silver

Terminal Seal
E Epoxy
All models are epoxy sealed

* Additional colors available, please contact Customer Service

Third Angle Projection

PNP Series
Sealed Pushbutton Switch

STANDARD VIEW

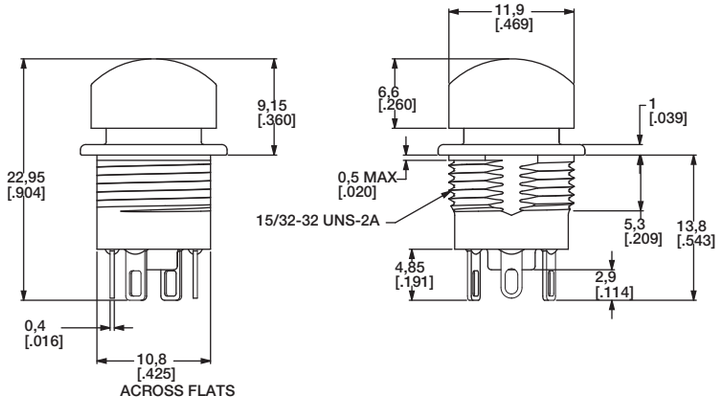

ELECTRICAL SCHEMATIC

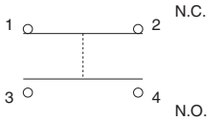

OPERATING FORCE

OPTION CODE	OPERATING FORCE
8	8 N

ACTUATOR STYLE

S STANDARD

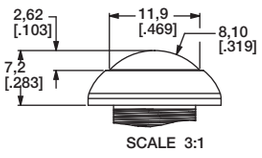

E EXTENDED (D HOUSING STYLE ONLY)

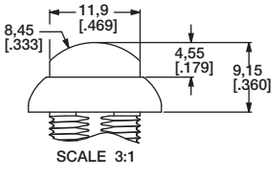

ACTUATOR COLOR

OPTION CODE	ACTUATOR COLOR
2	Black
3	Red
5	Yellow

HOUSING STYLE

T STANDARD THREADED MOUNT

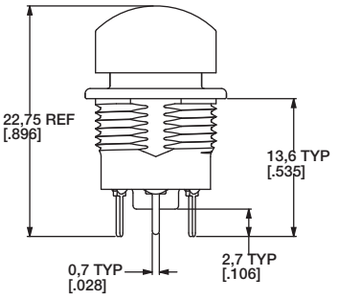

PC TERMINALS

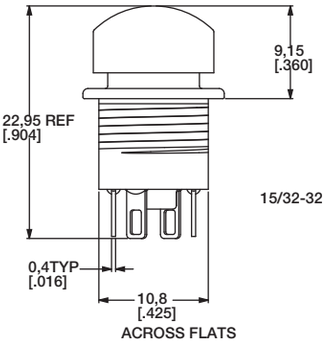

ACROSS FLATS

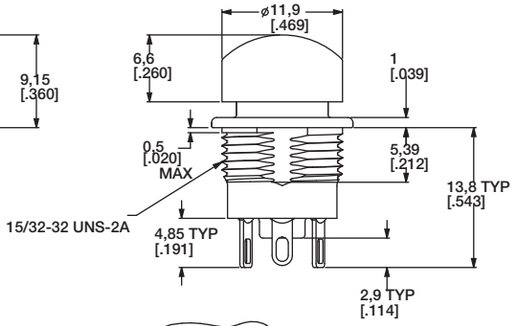

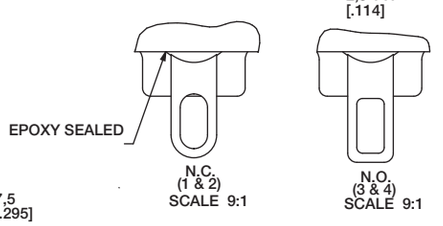

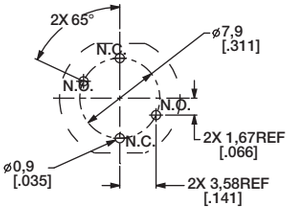

PC HOLE PATTERN
BOARD VIEW

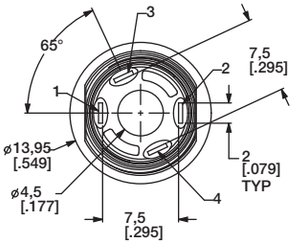

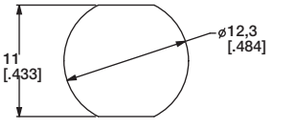

PANEL CUTOUT

D DOME BEZEL

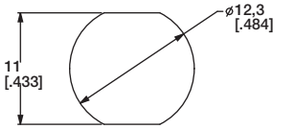

PANEL CUTOUT

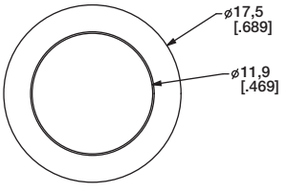

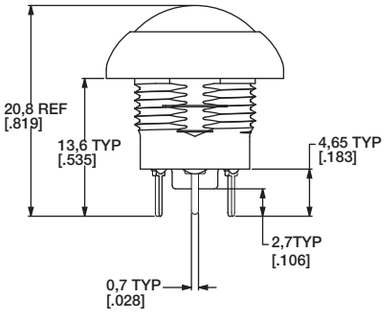

PC TERMINALS

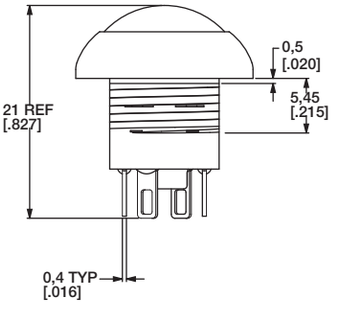

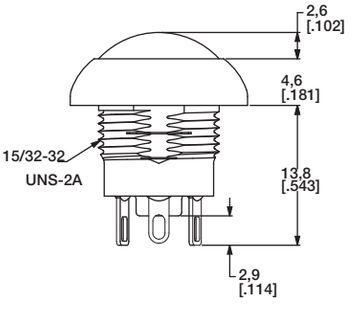

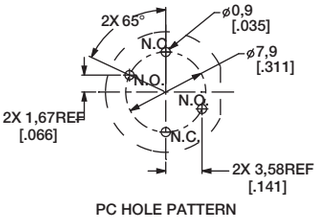

PC HOLE PATTERN
BOARD VIEW

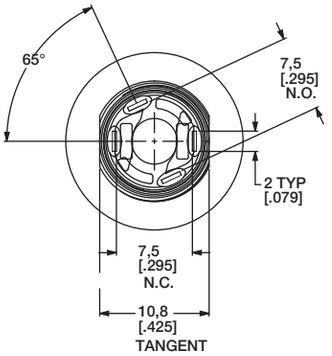

TANGENT
TO FLAT

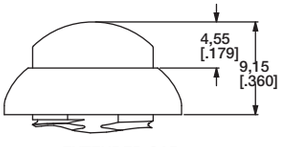

EXTENDED CAP

PNP Series
Sealed Pushbutton Switch

HOUSING COLOR

OPTION CODE	COLOR
2	Black (STD)

CIRCUIT

W SPST NC - Double Break

ELECTRICAL SCHEMATIC
2 WIRES

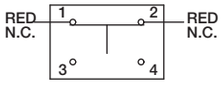

Y SPST NO - Double Break

ELECTRICAL SCHEMATIC
2 WIRES

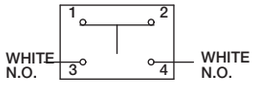

C SPDT - Double Break

ELECTRICAL SCHEMATIC
3 WIRES

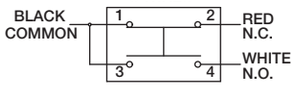

C SPDT - Double Break

ELECTRICAL SCHEMATIC
4 WIRES

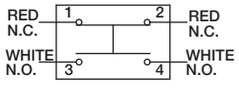

TERMINATION

02 PC PIN

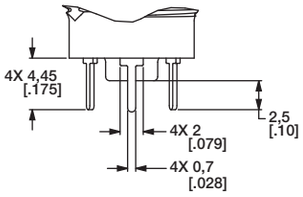

03 SOLDER LUG (STD)

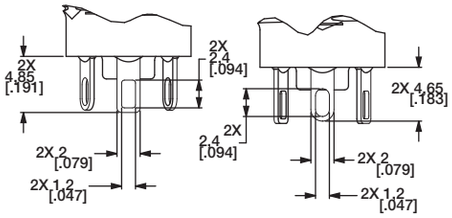

W2 2 x 12" 22 AWG UL1569 wire (overmolded)

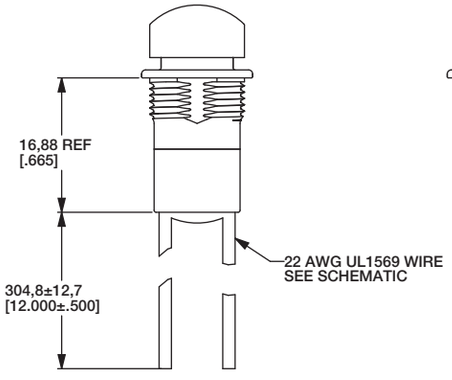

W3 3 x 12" 22 AWG UL1569 wire (overmolded)

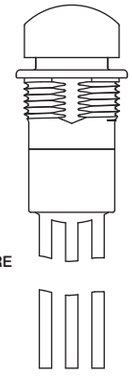

W4 4 x 12" 22 AWG UL1569 wire (overmolded)

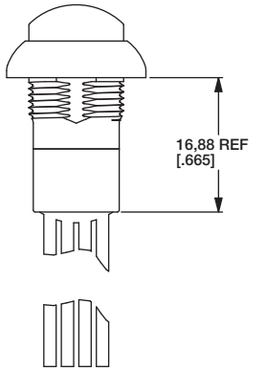

CONTACT MATERIAL

OPTION CODE	CONTACT MATERIAL
Q	Silver (STD)
G	Gold over silver

TERMINAL SEAL

E EPOXY
All models are epoxy sealed

HARDWARE

HEX NUT
707100201 Nickel-plated

LOCKWASHER
700302202

PANEL GASKET
851D02000

