Product datasheet

Specifications



inductive sensor XS1 M12 - L37mm - brass - Sn4mm - 12..24VDC - cable 2m

XS112B3NAL2

Main

Range of product	Telemecanique Inductive proximity sensors XS
Series name	General purpose
Sensor type	Inductive proximity sensor
Device application	Mobile equipment
Sensor name	XS1
Sensor design	Cylindrical M12
Size	37 mm
Body type	Fixed
Detector flush mounting acceptance	Flush mountable
Material	Metal
Type of output signal	Discrete
Wiring technique	3-wire
[Sn] nominal sensing distance	4 mm
Discrete output function	1 NO
Output circuit type	DC
Discrete output type	NPN
Electrical connection	Cable
Cable length	2 m
[Us] rated supply voltage	12...24 V DC with reverse polarity protection
Switching capacity in mA	<= 200 mA with overload and short-circuit protection
IP degree of protection	IP65 conforming to IEC 60529 IP67 conforming to IEC 60529

Complementary

Thread type	M12 x 1
Detection face	Frontal
Front material	PPS
Enclosure material	Nickel plated brass
Operating zone	0…3.2 mm

Disclaimer: This documentation is not intended as a substitute for and is not to be used for determining suitability or reliability of these products for specific user applications

Differential travel	1...15% of Sr
Cable composition	3 x 0.34 mm²
Wire insulation material	PvR
Status LED	Output state: 1 LED (yellow)
Supply voltage limits	10…36 V DC
Switching frequency	<= 2500 Hz
Maximum voltage drop	<2 V (closed)
Current consumption	<= 10 mA no-load
Maximum delay first up	10 ms
Maximum delay response	0.2 ms
Maximum delay recovery	0.2 ms
Marking	CE
Threaded length	25 mm
Length	37 mm
Net weight	0.09 kg

Environment

Product certifications	E2 CSA UL
Ambient air temperature for operation	-25…70 °C
Ambient air temperature for storage	-40…85 °C
Vibration resistance	25 gn amplitude = +/- 2 mm (f = 10…55 Hz) conforming to IEC 60068-2-6
Shock resistance	50 gn for 11 ms conforming to IEC 60068-2-27

Packing Units

Unit Type of Package 1	PCE
Number of Units in Package 1	1
Package 1 Weight	91.0 g
Package 1 Height	4.1 cm
Package 1 width	9.5 cm
Package 1 Length	13.2 cm
Unit Type of Package 2	BAG
Number of Units in Package 2	1
Package 2 Weight	91.0 g
Package 2 Height	2 cm
Package 2 width	20 cm
Package 2 Length	15 cm
Unit Type of Package 3	S02
Number of Units in Package 3	22
Package 3 Weight	2.457 kg
Package 3 Height	15 cm
Package 3 width	30 cm

Package 3 Length	40 cm

Offer Sustainability

Sustainable offer status	Green Premium product
REACh Regulation	REACh Declaration
EU RoHS Directive	Pro-active compliance (Product out of EU RoHS legal scope) EU RoHS Declaration
Mercury free	Yes
RoHS exemption information	Yes
Environmental Disclosure	Product Environmental Profile
Circularity Profile	End of Life Information

Contractual warranty

Warranty	18 months

Product datasheet XS112B3NAL2

Dimensions Drawings

Dimensions

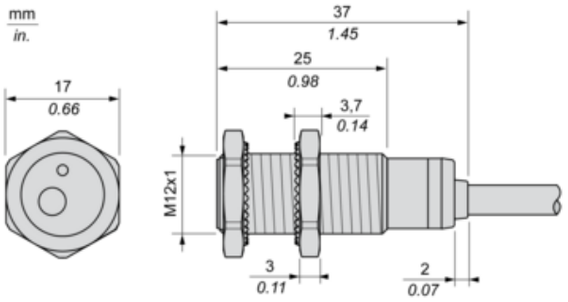

Minimum Mounting Distances

Side by side

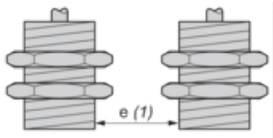

e (1) ≥ 8 mm/0.31 in.

Face to face

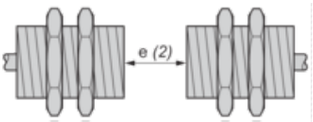

e (2) ≥ 48 mm/1.89 in.

Facing a metal object

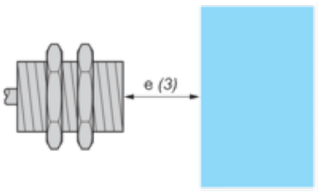

e (3) ≥ 12 mm/0.47 in.

Product datasheet XS112B3NAL2

Mounting and Clearance

Mounting

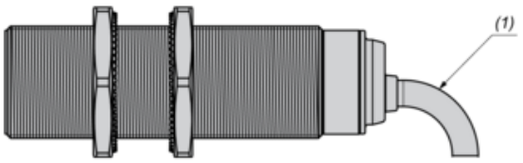

(1) Bending cable: 4 x external cable diameter

Wiring Schemes

NPN

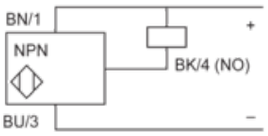

BU : Blue
BN : Brown
BK : Black