128, av. du Maréchal-de-Lattre-de-Tassigny - 87045 LIMOGES Cedex
Tél. : 0 (+33) 5 55 06 87 87 - Fax : 0 (+33) 5 55 06 88 88
www.legrand.com

Plexo™
Junction box ERP

Cat. No(s): 0 920 15/25/45

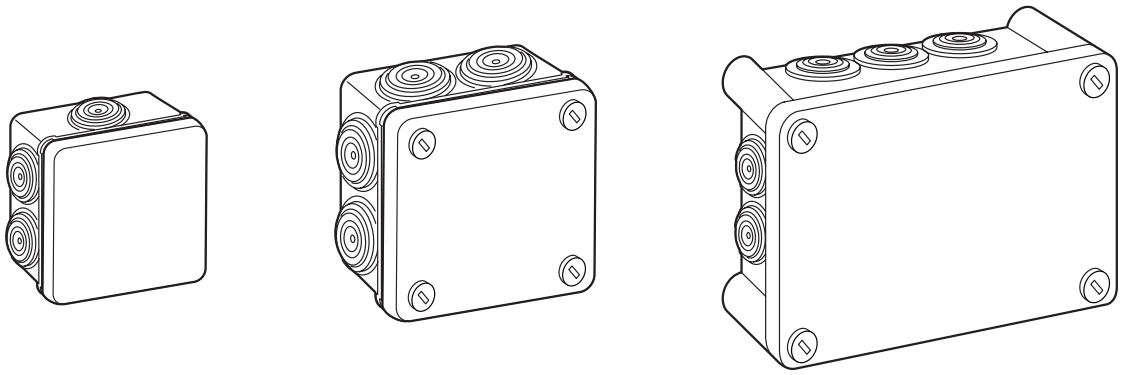

1. USE

Special weatherproof boxes for safety circuits in public buildings and work premises.
In accordance with regulations governing public buildings under Article EL 16 §1.
- Compliant with the NFS 61-937 standard dealing with fire safety systems including actuated fire safety devices (compartmentalization, smoke extraction, etc.).
- Cover colour grey RAL 7037.
- Box colour red RAL 3000.
- Can be fitted with IP2x terminal strips for the 155 x 110 box.

2. RANGE

Cat. No.	Inside dimensions	Nbr. of caps	Cover type
920 15	80 x 80 x 45	7	clippable
920 25	105 x 105 x 55	7	1/4 turn screw closing
920 45	155 x 110 x 74	10	1/4 turn screw closing

3. INSTALLATION

- Diameter of cables and tubes accepted:
  - 4 to 20 mm for round and square boxes up to 80 x 80
  - 4 to 25 mm for 105 x 105 square boxes
- Fixing with vertical level adjustment possible using Ø 5 mm max. screw
- Possible to fix outside the wiring space using Ø 4 mm screws for square boxes Cat. Nos. 0 920 25/45.
- Can be fixed using wall plug Cat. No. 0 319 57
- Can be fixed using SPIT «Pulsa 700 E» nail gun
- Marking areas on the cover for labelling the circuits on internal face and identifying the junction on external face.

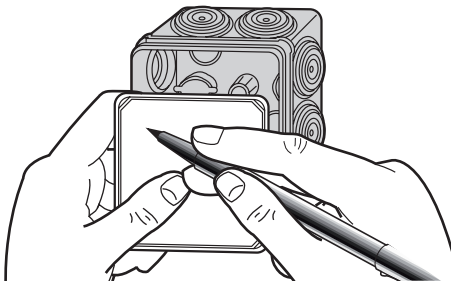

3. INSTALLATION *(continued)*

- Removable cover linked with the box by a tie

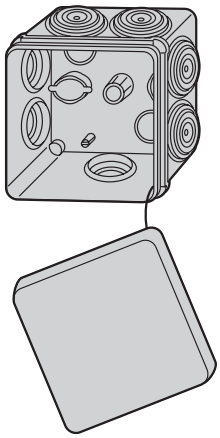

- Installing cables and tubes < Ø 16 mm

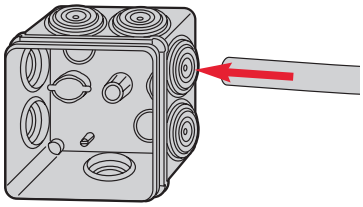

- Installing Ø 20 and 25 mm tubes

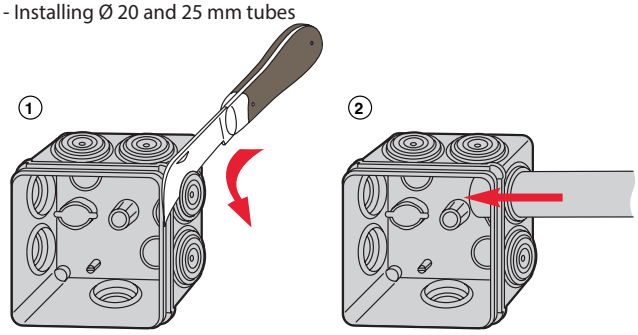

3. INSTALLATION *(suite)*

_ Specific installation in case of condensate drain:
Creation of drainage holes with a diameter of 6mm at the places indicated according to the direction of assembly.

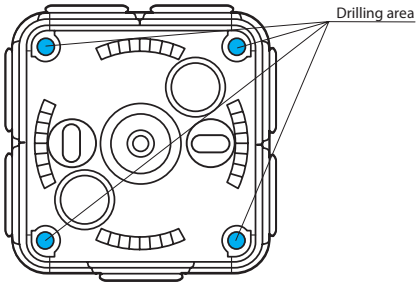

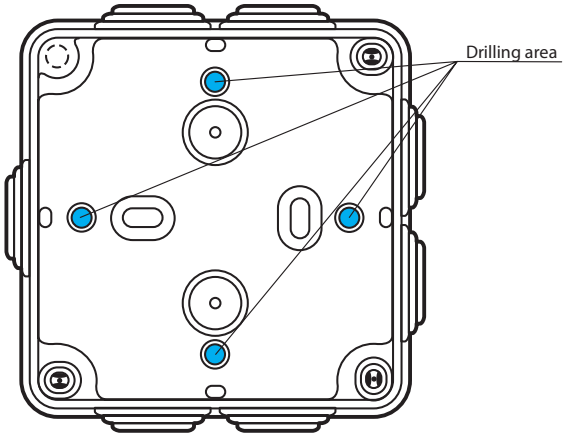

4. DIMENSIONS (mm)

- Square box 80 x 80

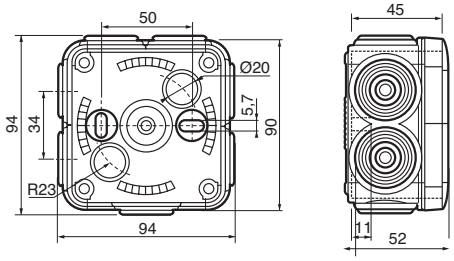

- Square box 105 x 105

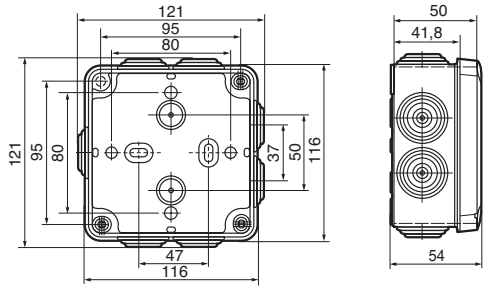

- Rectangular box 155 x 110

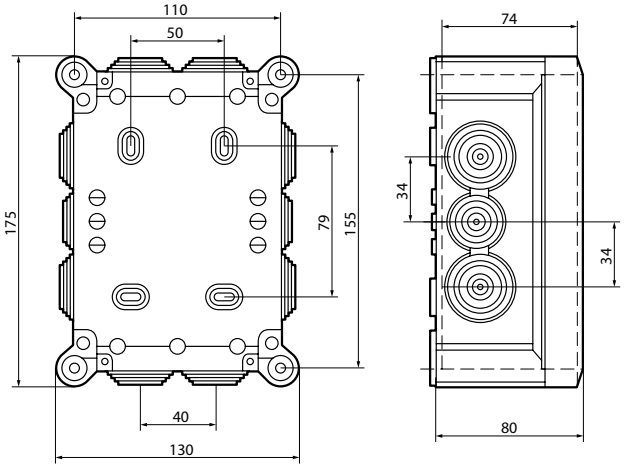

5. TECHNICAL CHARACTERISTICS

■ 5.1 Mechanical characteristics
Protection against solid bodies and liquids: IP 55
Protection against impact: IK 07

■ 5.2 Material characteristics
Colour: Box red RAL 3000
Cover and end caps RAL 7037
Material: Box ABS
Cover: PP (Polypropylene)
Glands: SEBS

Halogen-free
UV-resistant

Resistant to oil and grease

Self-extinguishing: 960° C / 5 s

■ 5.3 Climate characteristics
Storage temperature: -25°C to +70°C
Use temperature: -25°C to +45°C

6. CLEANING

Surface cleaning with a dry cloth or cloth soaked in soapy water.
Do not use acetone, tar remover or trichlorethylene.

Caution: A preliminary test should be carried out if other specific cleaning products are to be used.

7. STANDARDS AND APPROVALS

Compliant with installation and manufacturing standards.
See e-catalogue.